cadence®

Cadence® Verilog®-AMS Language Reference

Product Version 14.2
January 2015

© 2000–2015 Cadence Design Systems, Inc. All rights reserved.
Portions © Regents of the University of California, Sun Microsystems, Inc., Scriptics Corporation. Used by permission.
Printed in the United States of America.

Cadence Design Systems, Inc. (Cadence), 2655 Seely Ave., San Jose, CA 95134, USA.

The AMS Designer simulator contains technology licensed from, and copyrighted by: Regents of the University of California, Sun Microsystems, Inc., Scriptics Corporation, and other parties and is © 1989-1994 Regents of the University of California, 1984, the Australian National University, 1990-1999 Scriptics Corporation, and other parties. All rights reserved.

Open SystemC, Open SystemC Initiative, OSCI, SystemC, and SystemC Initiative are trademarks or registered trademarks of Open SystemC Initiative, Inc. in the United States and other countries and are used with permission.

MMSIM contains technology licensed from, and copyrighted by: C. L. Lawson, R. J. Hanson, D. Kincaid, and F. T. Krogh © 1979, J. J. Dongarra, J. Du Croz, S. Hammarling, and R. J. Hanson © 1988, J. J. Dongarra, J. Du Croz, I. S. Duff, and S. Hammarling © 1990; University of Tennessee, Knoxville, TN and Oak Ridge National Laboratory, Oak Ridge, TN © 1992-1996; Brian Paul © 1999-2003; M. G. Johnson, Brisbane, Queensland, Australia © 1994; Kenneth S. Kundert and the University of California, 1111 Franklin St., Oakland, CA 94607-5200 © 1985-1988; Hewlett-Packard Company, 3000 Hanover Street, Palo Alto, CA 94304-1185 USA © 1994, Silicon Graphics Computer Systems, Inc., 1140 E. Arques Ave., Sunnyvale, CA 94085 © 1996-1997, Moscow Center for SPARC Technology, Moscow, Russia © 1997; Regents of the University of California, 1111 Franklin St., Oakland, CA 94607-5200 © 1990-1994, Sun Microsystems, Inc., 4150 Network Circle Santa Clara, CA 95054 USA © 1994-2000, Scriptics Corporation, and other parties © 1998-1999; Aladdin Enterprises, 35 Efal St., Kiryat Arye, Petach Tikva, Israel 49511 © 1999 and Jean-loup Gailly and Mark Adler © 1995-2005; RSA Security, Inc., 174 Middlesex Turnpike Bedford, MA 01730 © 2005.

All rights reserved.
Associated third party license terms may be found at `install_dir/doc/OpenSource/*`

Trademarks: Trademarks and service marks of Cadence Design Systems, Inc. contained in this document are attributed to Cadence with the appropriate symbol. For queries regarding Cadence's trademarks, contact the corporate legal department at the address shown above or call 800.862.4522. All other trademarks are the property of their respective holders.

Restricted Permission: This publication is protected by copyright law and international treaties and contains trade secrets and proprietary information owned by Cadence. Unauthorized reproduction or distribution of this publication, or any portion of it, may result in civil and criminal penalties. Except as specified in this permission statement, this publication may not be copied, reproduced, modified, published, uploaded, posted, transmitted, or distributed in any way, without prior written permission from Cadence. Unless otherwise agreed to by Cadence in writing, this statement grants Cadence customers permission to print one (1) hard copy of this publication subject to the following conditions:

1. The publication may be used only in accordance with a written agreement between Cadence and its customer.
2. The publication may not be modified in any way.
3. Any authorized copy of the publication or portion thereof must include all original copyright, trademark, and other proprietary notices and this permission statement.
4. The information contained in this document cannot be used in the development of like products or software, whether for internal or external use, and shall not be used for the benefit of any other party, whether or not for consideration.

Patents: Cadence products described in this document, are protected by U.S. Patents 5,095,454; 5,418,931; 5,606,698; 5,610,847; 5,790,436; 5,812,431; 5,838,949; 5,859,785; 5,949,992; 5,987,238;

6,088,523; 6,101,323; 6,151,698; 6,163,763; 6,181,754; 6,260,176; 6,263,301; 6,278,964; 6,301,578; 6,349,272; 6,374,390; 6,487,704; 6,493,849; 6,504,885; 6,618,837; 6,636,839; 6,778,025; 6,832,358; 6,851,097; 7,035,782; 7,039,887; 7,055,116; 7,085,700; 7,251,795; and 7,260,792.

Disclaimer: Information in this publication is subject to change without notice and does not represent a commitment on the part of Cadence. Except as may be explicitly set forth in such agreement, Cadence does not make, and expressly disclaims, any representations or warranties as to the completeness, accuracy or usefulness of the information contained in this document. Cadence does not warrant that use of such information will not infringe any third party rights, nor does Cadence assume any liability for damages or costs of any kind that may result from use of such information.

Restricted Rights: Use, duplication, or disclosure by the Government is subject to restrictions as set forth in FAR52.227-14 and DFAR252.227-7013 et seq. or its successor.

Contents

Preface 19
Related Documents 20
Internet Mail Address 20
Typographic and Syntax Conventions 21

1
Modeling Concepts 23
Verilog-AMS Language Overview 24
Describing a System 24
Analog Systems 25
Nodes 25
Conservative Systems 25
Signal-Flow Systems 26
Mixed Conservative and Signal-Flow Systems 26
Simulator Flow for Analog Systems 27

2
Creating Modules 29
Declaring Modules 30
Declaring the Module Interface 33
Module Name 33
Ports 33
Parameters 36
Specifying Supply Sensitivity Attributes 37
Using the Sensitivity Attributes in a Chain of Buffers 39
Using Sensitivity Attributes with Inherited Connections 41
Defining Module Analog Behavior 42
Defining Analog Behavior with Control Flow 44
Using Integration and Differentiation with Analog Signals 45
Using Internal Nodes in Modules 47

© 2000-2015 All Rights Reserved.

Using Internal Nodes in Behavioral Definitions 47
Using Internal Nodes in Higher Order Systems 48

3
Lexical Conventions 49
White Space 50
Comments 50
Identifiers 50
Ordinary Identifiers 51
Escaped Names 51
Scope Rules 51
Numbers 52
Integer Numbers 52
Real Numbers 52
Strings 54
Standard Attributes 55

4
Data Types and Objects 57
Output Variables 58
Integer Numbers 59
Real Numbers 60
Converting Real Numbers to Integer Numbers 60
Strings 61
Parameters 62
Specifying a Parameter Type 63
Specifying Permissible Values 64
Specifying Parameter Arrays 65
String Parameters 66
Parameter Aliases 67
Dynamic Parameters 68
Local Parameters 69
Genvars 70
Natures 70
Declaring a Base Nature 72

© 2000-2015 All Rights Reserved.

Disciplines 74
Binding Natures with Potential and Flow 74
Binding Domains with Disciplines 75
Disciplines and Domains of Wires and Undeclared Nets 76
Discipline Precedence 77
Compatibility of Disciplines 77
Net Disciplines 80
Ground Nodes 82
Real Nets 83
Arrays of Real Nets 84
Real Nets with More than One Driver 84
Named Branches 86
Implicit Branches 87

5
Statements for the Analog Block 89

Assignment Statements 89
Procedural Assignment Statements in the Analog Block 90
Branch Contribution Statement 90
Indirect Branch Assignment Statement 92
Sequential Block Statement 93
Conditional Statement 94
Case Statement 94
Repeat Statement 95
While Statement 96
For Statement 96
Generate Statement 97

6
Operators for Analog Blocks 101

Overview of Operators 102
Unary Operators 103
Unary Reduction Operators 103
Binary Operators 105
Bitwise Operators 108

© 2000-2015 All Rights Reserved.

Ternary Operator 109
Operator Precedence 110
Expression Short-Circuiting 110

7
Built-In Mathematical Functions 111

Standard Mathematical Functions 112
Trigonometric and Hyperbolic Functions 112
Controlling How Math Domain Errors Are Handled 113

8
Detecting and Using Events 115

Detecting and Using Events 116
Initial_step Event 117
Final_step Event 118
Cross Event 119
Above Event 120
Absdelta Event 122
Timer Event 124

9
Simulator Functions 125

Announcing Discontinuity 127
Bounding the Time Step 129
Announcing and Handling Nonlinearities 129
Finding When a Signal Is Zero 130
Querying the Simulation Environment 131
Obtaining the Current Simulation Time 131
Obtaining the Current Ambient Temperature 132
Obtaining the Thermal Voltage 132
Querying the scale, gmin, and iteration Simulation Parameters 133
Obtaining and Setting Signal Values 133
Obtaining Currents Using Out-of-Module References 137
Accessing Attributes 138

© 2000-2015 All Rights Reserved.

Examining Drivers . . . 138
Counting the Number of Drivers . . . 139
Determining the Value Contribution of a Driver . . . 139
Determining the Strength of a Driver . . . 139
Detecting Updates to Drivers . . . 140
Analysis-Dependent Functions . . . 141
Determining the Current Analysis Type . . . 141
Implementing Small-Signal AC Sources . . . 142
Implementing Small-Signal Noise Sources . . . 142
Generating Random Numbers . . . 145
Generating Random Numbers in Specified Distributions . . . 146
Uniform Distribution . . . 146
Normal (Gaussian) Distribution . . . 147
Exponential Distribution . . . 148
Poisson Distribution . . . 148
Chi-Square Distribution . . . 149
Student's T Distribution . . . 150
Erlang Distribution . . . 151
Interpolating with Table Models . . . 151
Table Model File Format . . . 154
Example: Using the $table_model Function . . . 156
Example: Preparing Data in One-Dimensional Array Format . . . 156
Example: Using $table_model as a Built-In Digital System Task . . . 157
Node/Net Aliasing System Functions . . . 158
Aliasing Local Nodes to Hierarchical Nodes with $analog_node_alias . . . 158
Aliasing Local Nets to Hierarchical Nets with $real_net_alias . . . 160
Analog Operators . . . 164
Restrictions on Using Analog Operators . . . 164
Limited Exponential Function . . . 165
Time Derivative Operator . . . 165
Time Integral Operator . . . 166
Circular Integrator Operator . . . 167
Derivative Operator . . . 169
Delay Operator . . . 170
Transition Filter . . . 171
Slew Filter . . . 175

© 2000-2015 All Rights Reserved.

Implementing Laplace Transform S-Domain Filters 176
Implementing Z-Transform Filters 182
Displaying Results 186
$strobe 186
$display 189
$write 190
$debug 190
$monitor 190
Specifying Power Consumption 191
Working with Files 192
Opening a File 192
Reading from a File 195
Writing to a File 196
Finding the File Position 198
Closing a File 199
Simulator Control Functions 199
$finish 200
$finish_current_analysis 200
$stop 201
$fatal 201
$error 202
$warning 202
$info 202
Entering Interactive Tcl Mode 203
User-Defined Functions 203
Declaring an Analog User-Defined Function 203
Calling a User-Defined Analog Function 205

10
Instantiating Modules and Primitives 207

Instantiating Verilog-AMS Modules 208
Creating and Naming Instances 208
Creating Arrays of Instances 209
Mapping Instance Ports to Module Ports 210
Connecting the Ports of Module Instances 211

© 2000-2015 All Rights Reserved.

Port Connection Rules . . . 213
Overriding Parameter Values in Instances . . . 213
Overriding Parameter Values from the Instantiation Statement . . . 213
Overriding Parameter Values Using defparam . . . 215
Precedence Rules for Overriding Parameter Values . . . 216
Instantiating Analog Primitives . . . 216
Instantiating Analog Primitives that Use Array Valued Parameters . . . 217
Instantiating Modules that Use Unsupported Parameter Types . . . 217
Using an M Factor (Multiplicity Factor) . . . 218
Example: Using an M Factor . . . 218
Including Verilog-A Modules in Spectre Subcircuits . . . 220

11
Mixed-Signal Aspects of Verilog-AMS . . . 221

Fundamental Mixed-Signal Concepts . . . 221
Domains . . . 221
Contexts . . . 221
Nets, Nodes, Ports, and Signals . . . 222
Mixed-signal and Net Disciplines . . . 222
Behavioral Interaction . . . 223
Accessing Discrete Nets and Variables from a Continuous Context . . . 224
Accessing Continuous Nets and Variables from a Discrete Context . . . 225
Detecting Discrete Events from a Continuous Context . . . 226
Detecting Continuous Events from a Discrete Context . . . 226
Connect Modules . . . 226
Coding Connect Modules . . . 227
Using Automatically-Inserted Connect Modules . . . 232
Understanding the Factors Affecting Connect Module Placement . . . 237
Understanding How Connect Modules Operate . . . 243

12
Controlling the Compiler . . . 249

Implementing Text Macros . . . 250
`define Compiler Directive . . . 250
`undef Compiler Directive . . . 251

© 2000-2015 All Rights Reserved.

Compiling Code Conditionally 252
Including Files at Compilation Time 253
Adjusting the Time Scale 254
Setting a Default Discrete Discipline for Signals 256
Setting Default Rise and Fall Times 258
Resetting Directives to Default Values 258
Specifying Which Reserved Keyword List to Use 259
Removing and Restoring Specific Keywords 261
Checking Support for Compact Modeling Extensions 262

A
Nodal Analysis 263
Kirchhoff's Laws 264
Simulating an Analog System 265
Transient Analysis 265
Convergence 265

B
Analog Probes and Sources 267
Overview of Probes and Sources 268
Probes 268
Port Branches 268
Sources 269
Unassigned Sources 271
Switch Branches 271
Examples of Sources and Probes 273
Linear Conductor 273
Linear Resistor 274
RLC Circuit 274
Simple Implicit Diode 274

C
Sample Model Library 275
Analog Components 277

© 2000-2015 All Rights Reserved.

Analog Multiplexer 277
Current Deadband Amplifier 278
Hard Current Clamp 279
Hard Voltage Clamp 280
Open Circuit Fault 281
Operational Amplifier 282
Constant Power Sink 283
Short Circuit Fault 284
Soft Current Clamp 285
Soft Voltage Clamp 286
Self-Tuning Resistor 287
Untrimmed Capacitor 289
Untrimmed Inductor 290
Untrimmed Resistor 291
Voltage Deadband Amplifier 292
Voltage-Controlled Variable-Gain Amplifier 293
Basic Components 294
Resistor 294
Capacitor 295
Inductor 296
Voltage-Controlled Voltage Source 297
Current-Controlled Voltage Source 298
Voltage-Controlled Current Source 299
Current-Controlled Current Source 300
Switch 301
Control Components 302
Error Calculation Block 302
Lag Compensator 303
Lead Compensator 304
Lead-Lag Compensator 305
Proportional Controller 306
Proportional Derivative Controller 307
Proportional Integral Controller 308
Proportional Integral Derivative Controller 309
Logic Components 310
AND Gate 310

© 2000-2015 All Rights Reserved.

NAND Gate 311
OR Gate 312
NOT Gate 313
NOR Gate 314
XOR Gate 315
XNOR Gate 316
D-Type Flip-Flop 317
Clocked JK Flip-Flop 318
JK-Type Flip-Flop 320
Level Shifter 321
RS-Type Flip-Flop 322
Trigger-Type (Toggle-Type) Flip-Flop 323
Half Adder 324
Full Adder 325
Half Subtractor 326
Full Subtractor 327
Parallel Register, 8-Bit 328
Serial Register, 8-Bit 329
Electromagnetic Components 330
DC Motor 330
Electromagnetic Relay 331
Three-Phase Motor 332
Functional Blocks 333
Amplifier 333
Comparator 334
Controlled Integrator 335
Deadband 336
Deadband Differential Amplifier 337
Differential Amplifier (Opamp) 338
Differential Signal Driver 339
Differentiator 340
Flow-to-Value Converter 341
Rectangular Hysteresis 342
Integrator 343
Level Shifter 344
Limiting Differential Amplifier 345

© 2000-2015 All Rights Reserved.

Logarithmic Amplifier . . . 346
Multiplexer . . . 347
Quantizer . . . 348
Repeater . . . 349
Saturating Integrator . . . 350
Swept Sinusoidal Source . . . 351
Three-Phase Source . . . 352
Value-to-Flow Converter . . . 353
Variable Frequency Sinusoidal Source . . . 354
Variable-Gain Differential Amplifier . . . 355
Magnetic Components . . . 356
Magnetic Core . . . 356
Magnetic Gap . . . 357
Magnetic Winding . . . 358
Two-Phase Transformer . . . 359
Mathematical Components . . . 360
Absolute Value . . . 360
Adder . . . 361
Adder, 4 Numbers . . . 362
Cube . . . 363
Cubic Root . . . 364
Divider . . . 365
Exponential Function . . . 366
Multiplier . . . 367
Natural Log Function . . . 368
Polynomial . . . 369
Power Function . . . 370
Reciprocal . . . 371
Signed Number . . . 372
Square . . . 373
Square Root . . . 374
Subtractor . . . 375
Subtractor, 4 Numbers . . . 376
Measure Components . . . 377
ADC, 8-Bit Differential Nonlinearity Measurement . . . 377
ADC, 8-Bit Integral Nonlinearity Measurement . . . 378

© 2000-2015 All Rights Reserved.

Ammeter (Current Meter) . . . 379
DAC, 8-Bit Differential Nonlinearity Measurement . . . 380
DAC, 8-Bit Integral Nonlinearity Measurement . . . 381
Delta Probe . . . 382
Find Event Probe . . . 383
Find Slope . . . 385
Frequency Meter . . . 386
Offset Measurement . . . 387
Power Meter . . . 388
Q (Charge) Meter . . . 390
Sampler . . . 391
Slew Rate Measurement . . . 392
Signal Statistics Probe . . . 393
Voltage Meter . . . 395
Z (Impedance) Meter . . . 396
Mechanical Systems . . . 397
Gearbox . . . 397
Mechanical Damper . . . 398
Mechanical Mass . . . 399
Mechanical Restrainer . . . 400
Road . . . 401
Mechanical Spring . . . 402
Wheel . . . 403
Mixed-Signal Components . . . 404
Analog-to-Digital Converter, 8-Bit . . . 404
Analog-to-Digital Converter, 8-Bit (Ideal) . . . 405
Decimator . . . 406
Digital-to-Analog Converter, 8-Bit . . . 407
Digital-to-Analog Converter, 8-Bit (Ideal) . . . 408
Sigma-Delta Converter (first-order) . . . 409
Sample-and-Hold Amplifier (Ideal) . . . 410
Single Shot . . . 411
Switched Capacitor Integrator . . . 412
Power Electronics Components . . . 413
Full Wave Rectifier, Two Phase . . . 413
Half Wave Rectifier, Two Phase . . . 414

© 2000-2015 All Rights Reserved.

Thyristor 415
Semiconductor Components 416
Diode 416
MOS Transistor (Level 1) 417
MOS Thin-Film Transistor 419
N JFET Transistor 420
NPN Bipolar Junction Transistor 421
Schottky Diode 423
Telecommunications Components 424
AM Demodulator 424
AM Modulator 425
Attenuator 426
Audio Source 427
Bit Error Rate Calculator 428
Charge Pump 429
Code Generator, 2-Bit 430
Code Generator, 4-Bit 431
Decider 432
Digital Phase Locked Loop (PLL) 433
Digital Voltage-Controlled Oscillator 434
FM Demodulator 435
FM Modulator 436
Frequency-Phase Detector 437
Mixer 438
Noise Source 439
PCM Demodulator, 8-Bit 440
PCM Modulator, 8-Bit 441
Phase Detector 442
Phase Locked Loop 443
PM Demodulator 444
PM Modulator 445
QAM 16-ary Demodulator 446
Quadrature Amplitude 16-ary Modulator 448
QPSK Demodulator 449
QPSK Modulator 450
Random Bit Stream Generator 451

© 2000-2015 All Rights Reserved.

Transmission Channel 452
Voltage-Controlled Oscillator 453

D
Verilog-AMS Keywords 455
Keywords to Support Backward Compatibility 457
Discipline and Nature Keywords 457
Connect Rules Keywords 457

E
Unsupported Elements of Verilog-AMS 459

F
Updating Verilog-A Modules 473
Suggestions for Updating Models 474
Current Probes 475
Analog Functions 475
NULL Statements 475
inf Used as a Number 476
Changing Delay to Absdelay 476
Changing $realtime to $abstime 476
Changing bound_step to $bound_step 477
Changing Array Specifications 477
Chained Assignments Made Illegal 477
Real Argument Not Supported as Direction Argument 477
$limexp Changed to limexp 478
'if 'MACRO is Not Allowed 478
$warning is Not Allowed 478
discontinuity Changed to $discontinuity 479

Glossary 481

Index 491

© 2000-2015 All Rights Reserved.

Preface

This manual describes the analog and mixed-signal aspects of the Cadence® Verilog®-AMS language. With Verilog-AMS, you can create and use modules that describe the high-level behavior and structure of analog, digital, and mixed-signal components and systems. The guidance given here is designed for users who are familiar with the development, design, and simulation of circuits and with high-level programming languages, such as C.

For information about the digital aspects of Verilog-AMS, the definitive source is *IEEE Standard Hardware Description Language Based on the Verilog Hardware Description Language (IEEE Std 1364-1995)*, published by the IEEE. Cadence documents that describe digital Verilog include the *NC Verilog Simulator Help* and the *Verilog-XL Reference*.

The preface discusses the following:

- Related Documents on page 20
- Internet Mail Address on page 20
- Typographic and Syntax Conventions on page 21

© 2000-2015 All Rights Reserved.

Related Documents

For more information about Verilog-AMS and related products, consult the sources listed below.

- *Virtuoso AMS Designer Environment User Guide*
- *Virtuoso AMS Designer Simulator User Guide*
- *Virtuoso Analog Design Environment User Guide*
- *Virtuoso Mixed-Signal Circuit Design Environment User Guide*
- *SimVision Analysis Environment User Guide*
- *Virtuoso Spectre Circuit Simulator Reference*
- *Virtuoso Spectre Circuit Simulator User Guide*
- *Verilog-A Debugging Tool User Guide*
- *Cadence Verilog-A Language Reference*
- *Cadence Hierarchy Editor User Guide*
- *Component Description Format User Guide*
- *IEEE Standard VHDL Language Reference Manual (Integrated with VHDL-AMS Changes), IEEE Std 1076.1*. Available from IEEE.
- *Instance-Based View Switching Application Note*
- *Cadence Library Manager User Guide*
- *Signalscan Waves User Guide*
- *Virtuoso Schematic Editor User Guide*
- *Verilog-AMS Language Reference Manual*. Available from Open Verilog International.
- *Verilog-XL Reference*

Internet Mail Address

You can send product enhancement requests and report obscure problems to Customer Support. For current phone numbers and e-mail addresses, go to Cadence Online Support and click the *Contact Us* link on the Home page.

© 2000-2015 All Rights Reserved.

For help with obscure problems, please include the following in your e-mail:

- The license server host ID

  To determine what your server's host ID is, use the Subscription Service of Cadence Online Support for assistance.

- A description of the problem
- The version of the Verilog-AMS product that you are using

  The version of the Verilog-AMS product described here is 1.0.

- Analog simulation control files, top-level modules and all included files including hardware design language (HDL) modules so that Customer Support can reproduce the problem
- Output logs and error messages

Typographic and Syntax Conventions

Special typographical conventions are used to distinguish certain kinds of text in this document. The formal syntax used in this reference uses the definition operator, `::=` , to define the more complex elements of the Verilog-AMS language in terms of less complex elements.

- Lowercase words represent syntactic categories. For example,

  `module_declaration`

  Some names begin with a part that indicates how the name is used. For example,

  `node_identifier`

  represents an identifier that is used to declare or reference a node.

- Boldface words represent elements of the syntax that must be used exactly as presented. Such items include keywords, operators, and punctuation marks. For example,

  `endmodule`

- Vertical bars indicate alternatives. You can choose to use any one of the items separated by the bars. For example,

```
attribute ::=
        abstol
    |   access
    |   ddt_nature
    |   idt_nature
    |   units
    |   huge
```


© 2000-2015 All Rights Reserved.

```
        |   blowup
        |   identifier
```

- Square brackets enclose optional items. For example,

```
input declaration ::=
    input [ range ] list_of_port_identifiers ;
```

- Braces enclose an item that can be repeated zero or more times. For example,

```
list_of_ports ::=
    ( port { , port } )
```

Code examples are displayed in constant-width font.

```
/* This is an example of the font used for code.*/
```

Within the text, variables are in italic font, like this: *allowed_errors*.

Within the text, keywords, filenames, names of natures, and names of disciplines are set in constant-width font, like this: `keyword`, `file_name`, `name_of_nature`, `name_of_discipline`.

If a statement is too long to fit on one line, the remainder of the statement is indented on the next line, like this:

```
qgf = width*length*cfbb*(vgfs - wkf - qb/(2*cbb) -
        (vgbs - vfbb + qb/(2*cob))) + qgf_par ;
```

To distinguish Verilog-AMS modules from the contents of analog simulation control files, the latter are enclosed in boxes and include a comment line at the beginning identifying them as analog simulation control files.

```
// sample analog simulation control file
simulator lang=spectre
save top.src1:freq
save top.src1:amp
save top.src1:phase
save top.src1:voltageAsRealNumber
timeDom tran stop=1000u
```


© 2000-2015 All Rights Reserved.

1

Modeling Concepts

This chapter introduces some important concepts basic to using the Cadence® Verilog®-AMS language, including

- Verilog-AMS Language Overview on page 24
- Describing a System on page 24
- Analog Systems on page 25

© 2000-2015 All Rights Reserved.

Verilog-AMS Language Overview

The Verilog®-AMS language lets you create and use modules that describe both the high-level behavior and the structure of analog and mixed-signal systems and components. You describe the behavior of a component mathematically in terms of its ports and external parameters. You describe the structure of a component in terms of interconnected subcomponents. With the statements of Verilog-AMS, you can describe a wide range of systems, such as electrical, mechanical, fluid dynamic, and thermodynamic systems.

For analog aspects of the design, the simulator uses Kirchhoff's Potential and Flow laws to develop a set of descriptive equations and then solves the equations with the Newton-Raphson method. See Appendix A, "Nodal Analysis," for additional information.

For information about the digital capabilities of Verilog-AMS, see the *NC Verilog Simulator Help*, the *Verilog-XL Reference*, and the *IEEE Standard Hardware Description Language Based on the Verilog Hardware Description Language*.

To introduce the algorithms underlying system simulation, the following sections describe

- What a system is
- How you specify the structure and behavior of a system
- How the simulator develops a set of equations and solves them to simulate a system

Describing a System

A *system* is a collection of interconnected components that produces a response when acted upon by a stimulus. A *hierarchical system* is a system in which the components are also systems. A *leaf component* is a component that has no subcomponents. Each leaf component connects to zero or more nets. Each net connects to a signal which can traverse multiple levels of the hierarchy. The behavior of each component is defined in terms of the values of the nets to which it connects.

A *signal* is a hierarchical collection of nets which, because of port connections, are contiguous. If all the nets that make up a signal are in the discrete domain, the signal is a *digital signal*. If all the nets that make up a signal are in the continuous domain, the signal is an *analog signal*. A signal that consists of nets from both domains is called a *mixed signal*.

Similarly, a port whose connections are both analog is an *analog port*, a port whose connections are both digital is a *digital port*, and a port with one analog connection and one

© 2000-2015 All Rights Reserved.

digital connection is a *mixed port*. The components interconnect through ports and nets to build a hierarchy, as illustrated in the following figure.

System Terminology

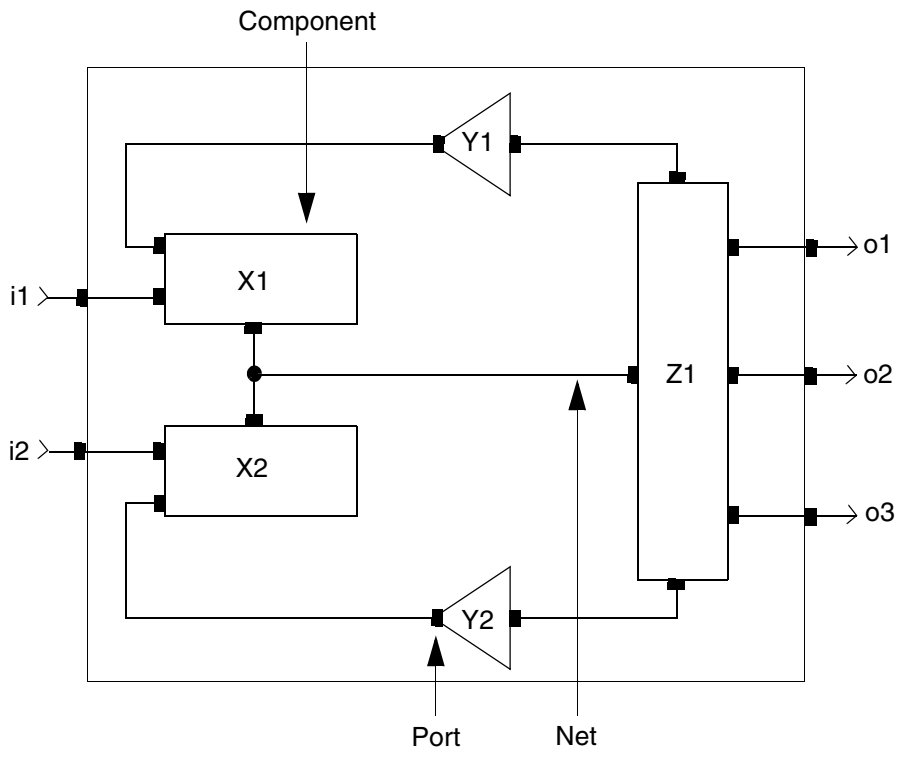

Analog Systems

The information in the following sections applies to analog systems.

Nodes

A node is a point of physical connection between nets of continuous-time descriptions. Nodes obey conservation-law semantics.

Conservative Systems

A *conservative system* is one that obeys the laws of conservation described by Kirchhoff's Potential and Flow laws. For additional information about these laws, see "Kirchhoff's Laws" on page 264.

© 2000-2015 All Rights Reserved.

In a conservative system, each node has two values associated with it: the potential of the node and the flow out of the node. Each branch in a conservative system also has two associated values: the potential across the branch and the flow through the branch.

Reference Nodes

The potential of a single node is defined with respect to a reference node. The reference node, called *ground* in electrical systems, has a potential of zero. Any net of continuous discipline can be declared to be ground, and in this case, the node associated with the net is the global reference node in the circuit. For information about declaring a ground, see "Ground Nodes" on page 82.

Reference Directions

Each branch has a reference direction for the potential and flow. For example, consider the following schematic. With the reference direction shown, the potential in this schematic is positive whenever the potential of the terminal marked with a plus sign is larger than the potential of the terminal marked with a minus sign.

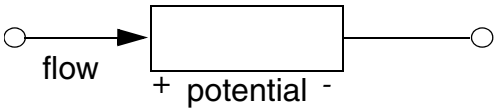

Verilog-AMS uses associated reference directions. Consequently, a positive flow is defined as one that enters the branch through the terminal marked with the plus sign and exits through the terminal marked with the minus sign.

Signal-Flow Systems

Unlike conservative systems, signal-flow systems associate only a single value with each node. Verilog-AMS supports signal-flow modeling.

Mixed Conservative and Signal-Flow Systems

With Verilog-AMS, you can model systems that contain a mixture of conservative nodes and signal-flow nodes. Verilog-AMS accommodates this mixing with semantics that can be used for both kinds of nodes. With Verilog-AMS you can model systems containing digital domain information too, so you can mix conservative analog, signal flow analog, and digital modeling in one mixed-signal system.

© 2000-2015 All Rights Reserved.

Simulator Flow for Analog Systems

After you specify the structure and behavior of a system, you submit the description to the simulator. For analog systems, the simulator then uses Kirchhoff's laws to develop equations that define the values and flows in the system. Because the equations are differential and nonlinear, the simulator does not solve them directly. Instead, the simulator uses an approximation and solves the equations iteratively at individual time points. The simulator controls the interval between the time points to ensure the accuracy of the approximation.

At each time point, iteration continues until two convergence criteria are satisfied. The first criterion requires that the approximate solution on this iteration be close to the accepted solution on the previous iteration. The second criterion requires that Kirchhoff's Flow Law be adequately satisfied. To indicate the required accuracy for these criteria, you specify tolerances. For a graphical representation of the analog iteration process, see the Simulator Flow for Analog Systems figure on page 28. For more details about how the simulator uses Kirchhoff's laws, see "Simulating an Analog System" on page 265.

© 2000-2015 All Rights Reserved.

Simulator Flow for Analog Systems

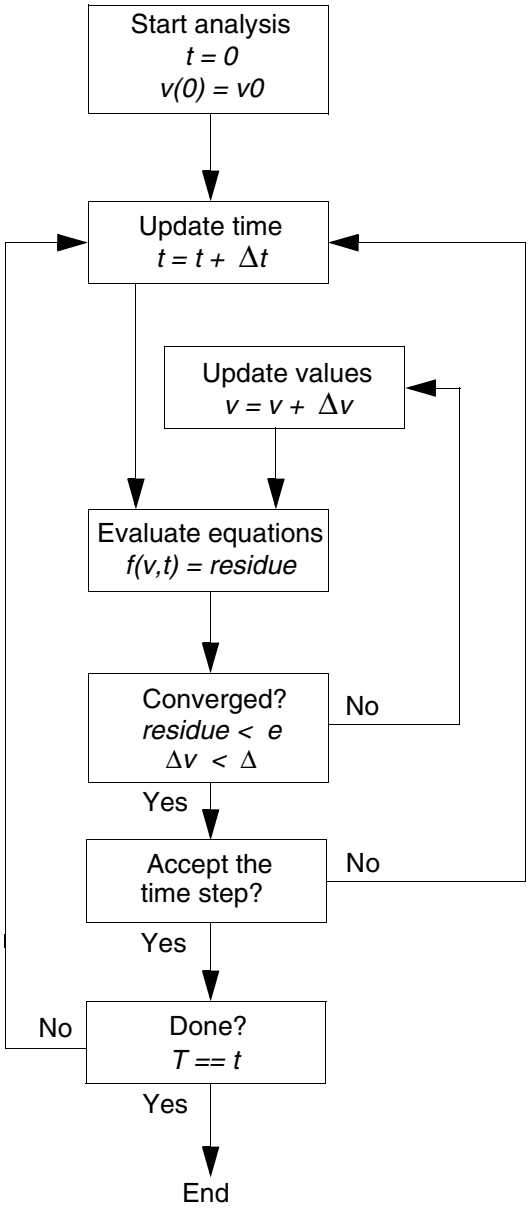

© 2000-2015
All Rights Reserved.

2

Creating Modules

A module definition appears between the keywords `module` and `endmodule` or `macromodule` and `endmodule`. The following definition for a digital to analog converter illustrates the form of a module definition.

Interface declarations

```
module daconv(b0, b1, b2, b3, b4, b5, b6, b7, compSig);
input b0, b1, b2, b3, b4, b5, b6, b7;
output compSig;

logic b0, b1, b2, b3, b4, b5, b6, b7;
electrical compSig;

parameter real refVolt = 12.0;
```

Behavioral description

```
analog
    begin

        V(compSig) <+  (refVolt/256) *
            (b0 + 2*(b1 + 2*(b2 + 2*(b3 +2*(b4 +2*
            (b5 +2*(b6 +2*b7)))))));

    end
endmodule
```

See the following topics for information about creating and using modules in Cadence® Verilog®-AMS:

- Declaring Modules on page 30
- Declaring the Module Interface on page 33
- Specifying Supply Sensitivity Attributes on page 37
- Defining Module Analog Behavior on page 42
- Using Internal Nodes in Modules on page 47
- Chapter 10, “Instantiating Modules and Primitives”

  This chapter contains detailed discussions about declaring and connecting ports and about instantiating modules.

© 2000-2015 All Rights Reserved.

Declaring Modules

To declare a module, use this syntax.

```
module_declaration ::=
        module_keyword module_identifier [ ( list_of_ports ) ] ;
        [ module_items ]
        endmodule

module_keyword ::=
        module
    |   macromodule

module_items ::=
        { module_item }
    |   analog_block

module_item ::=
        module_item_declaration
    |   parameter_override
    |   module_instantiation
    |   digital_continuous_assignment
    |   digital_gate_instantiation
    |   digital_udp_instantiation
    |   digital_specify_block
    |   digital_initial_construct
    |   digital_always_construct

module_item_declaration ::=
        parameter_declaration
    |   aliasparam_declaration
    |   input_declaration
    |   output_declaration
    |   inout_declaration
    |   ground_declaration
    |   integer_declaration
    |   net_discipline_declaration
    |   real_declaration
    |   genvar_declaration
    |   branch_declaration
    |   analog_function_declaration
    |   digital_function_declaration
    |   digital_net_declaration
    |   digital_reg_declaration
    |   digital_time_declaration
    |   digital_realtime_declaration
    |   digital_event_declaration
    |   digital_task_declaration
```


© 2000-2015 All Rights Reserved.

```
parameter_override ::=
        defparam list_of_param_assignments ;
```

module_identifier	The name of the module being declared.
list_of_ports	An ordered list of the module's ports. For details, see "Ports" on page 33.
module_items	Declarations and definitions.
	Note: Note that you can have no more than one analog block in each module.

For information about	Read
Analog blocks	"Defining Module Analog Behavior" on page 42
Parameter overrides	"Overriding Parameter Values in Instances" on page 213
Module instantiation	"Instantiating Verilog-AMS Modules" on page 208
Digital continuous assignments	"Continuous Assignments" in the *Verilog-XL Reference*
Digital gate instantiations	"Gate and Switch Declaration Syntax" in the *Verilog-XL Reference*
Digital udp instantiations	"UDP Instances" in the *Verilog-XL Reference*
Digital specify blocks	"Understanding Specify Blocks" in the *Verilog-XL Reference*
Digital initial constructs	"initial Statement" in the *Verilog-XL Reference*
Digital always constructs	"always Statement" in the *Verilog-XL Reference*
Parameter declarations	"Parameters" on page 62
Input, output, and inout declarations	"Port Direction" on page 34
Ground declarations	"Ground Nodes" on page 82
Integer declarations	"Integer Numbers" on page 59
Net discipline declarations	"Net Disciplines" on page 80
Real declarations	"Real Numbers" on page 60

© 2000-2015 All Rights Reserved.

For information about	Read
Genvar declarations	"Genvars" on page 70
Branch declarations	"Named Branches" on page 86
Analog function declarations	"User-Defined Functions" on page 203
Digital function declarations	"Functions and Function Calling" in the *Verilog-XL Reference*
Digital net declarations	"Net and Register Declaration Syntax" in the *Verilog-XL Reference*
Digital reg declarations	"Net and Register Declaration Syntax" in the *Verilog-XL Reference*
Digital time declarations	"Integers and Times" in the *Verilog-XL Reference*
Digital realtime declarations	"Real Numbers" in the *Verilog-XL Reference* **Note:** The simulator evaluates realtime and real declarations identically.
Digital event declarations	"Event Control" in the *Verilog-XL Reference*
Digital task declarations	"Tasks and Task Enabling" in the *Verilog-XL Reference*

© 2000-2015 All Rights Reserved.

Declaring the Module Interface

Use the module interface declarations to define

- Name of the module
- Ports of the module
- Parameters of the module

For example, the module interface declaration

```
module res(p, n) ;
inout p, n ;
electrical p, n ;
parameter real r = 0 ;
```

declares a module named `res`, ports named `p` and `n`, and a parameter named `r`.

Module Name

To define the name for a module, put an identifier after the keyword `module` or `macromodule`. Ensure that the new module name is unique among other module, schematic, subcircuit, and model names, and any built-in Spectre® circuit simulator primitives. If your module has any ports, list them in parentheses following the identifier.

Ports

To declare the ports used in a module, use port declarations. To specify the type and direction of a port, use the related declarations described in this section.

```
list_of_ports ::=
         port { , port }

port ::=
         port_expression
    |    .port identifier( [port_expression ])

port_expression ::=
         port_identifier
    |    port_identifier [ constant_expression ]
    |    port_identifier [ constant_range ]

constant_range ::=
    msb_constant_expression : lsb_constant_expression
```

For example, these code fragments illustrate possible port declarations.

```
module exam1 ;               // Defines no ports
module exam2 (p, n) ;        // Defines 2 simple ports
```


© 2000-2015 All Rights Reserved.

Normally, you cannot use `Q` as the name of a port. However, if you need to use `Q` as a port name, you can use the special text macro identifier, `VAMS_ELEC_DIS_ONLY`, as follows.

```
`define VAMS_ELEC_DIS_ONLY
`include "disciplines.vams"

(module 1, which uses a port called Q)
(module 2, which use a port called Q)
...

`include "disciplines.vams"

(module 3, which uses an access function called Q)
(module 4, which uses an access function called Q)
...
```

This macro undefines the sections in the `disciplines.vams` file that use `Q`, making it available for you to use as a port name. Consequently, when you need to use Q as an access function again, you need to include the `disciplines.vams` file again.

```
module exam5 (.b(p), .d(n))  // Defines the ports b and d, which are
                             // connected to the signals p and n,
                             // respectively
```

Port Type

To declare the type of a port, use a net discipline declaration in the body of the module. If you do not declare the type of a port, you can use the port only in a structural description. In other words, you can pass the port to module instances, but you cannot access the port in a behavioral description. Net discipline declarations are described in "Net Disciplines" on page 80.

Ports declared as vectors must use identical ranges for the port type and port direction declarations.

Port Direction

You must declare the port direction for every port in the list of ports section of the module declaration. To declare the direction of a port, use one of the following three syntaxes.

```
input_declaration ::=
         input [ range ] list_of_port_identifiers ;

output_declaration ::=
         output [ range ] list_of_port_identifiers ;

inout_declaration ::=
         inout [ range ] list_of_port_identifiers ;

range ::=
         [ constant_expression : constant_expression ]
```


© 2000-2015 All Rights Reserved.

`input`	Declares that the signals on the port cannot be set, although they can be used in expressions.
`output`	Declares that the signals on the port can be set, but they cannot be used in expressions.
`inout`	Declares that the port is bidirectional. The signals on the port can be both set and used in expressions. `inout` is the default port direction.

Ports declared as vectors must use identical ranges for the port type and port direction declarations.

In this release of Verilog-AMS,

- The compiler does not enforce correct application of `input`, `output`, and `inout`.
- You cannot use parameters to define *`constant_expression`*.

Port Declaration Example

Module `daconv`, described below, has nine ports. The `compSig` port is declared with a port direction of `output`, so that its value can be set. The other ports are declared with a port direction of `input`, so that their values can be read. The `compSig` port is declared as an analog port of the `electrical` discipline.

```
module daconv(b0, b1, b2, b3, b4, b5, b6, b7, compSig); // Declares nine ports
input b0, b1, b2, b3, b4, b5, b6, b7;        // Declares ports as input
output compSig;                              // Declares port as output

logic b0, b1, b2, b3, b4, b5, b6, b7;        // Declares type of digital ports
electrical compSig;                          // Declares type of analog port

parameter real refVolt = 12.0;

analog
    begin

        V(compSig) <+  (refVolt/256) *(b0 + 2*(b1 + 2*(b2 + 2*(b3 +2*(b4 +2*
            (b5 +2*(b6 +2*b7)))))));

    end
endmodule
```


© 2000-2015 All Rights Reserved.

Parameters

With parameter (and dynamicparam) declarations, you specify parameters that can be changed when a module is used as an instance in a design. Using parameters lets you customize each instance.

For each parameter, you must specify a default value. You can also specify an optional type and an optional valid range. The following example illustrates how to declare parameters and variables in a module.

Module interface declarations

Parameters

Local variables

Global module scope declarations and behavioral description

```
module sdiode(np, nn);
inout np, nn;
electrical np, nn;
parameter real area=1;
parameter real is=1e-14;
parameter real n=2;
parameter real cjo=0;
parameter real m=0.5;
parameter real phi=0.7;
parameter real tt=1p;

real vd, id, qd;

    analog begin
         vd = V(np, nn);
         id = area*is*(exp(vd/(n*$vt)) - 1);
         qd = tt*id + area*vd
                   *cjo/pow((1 - vd/phi), m);
         I(np, nn) <+ id + ddt(qd);
    end

endmodule
```

Module `sdiode` has a parameter, `area`, that defaults to 1. If `area` is not specified for an instance, it receives a value of 1. Similarly, the other parameters, `is`, `n`, `cjo`, `m`, `phi`, and `tt`, have specified default values too.

Module `sdiode` also defines three local variables: `vd`, `id`, and `qd`.

For more information about parameter declarations, see "Parameters" on page 62.

© 2000-2015 All Rights Reserved.

Specifying Supply Sensitivity Attributes

Add the `groundSensitivity` and `supplySensitivity` attributes to a port or pin definition in a mattributesodule to make a connect module sensitive to supplies in the module to which it connects.

```
sensitivity_attribute ::=
    (* [ integer groundSensitivity = "gSig_sensitive_to" ; ]
       [ integer supplySensitivity = "sSig_sensitive_to" ; ] *)
```

`gSig_sensitive_to`, *`sSig_sensitive_to`*
: Names of signals, typically global signals, to which you want a connect module to be sensitive.

When you specify a `supplySensitivity` or a `groundSensitivity` attribute on a signal in a connect module, the declared signal (in the connect module) takes on the value of the `supplySensitivity` or `groundSensitivity` signal you specify.

When you specify a `supplySensitivity` or the `groundSensitivity` attribute (or both) on a signal in an ordinary module, the value of the `supplySensitivity` or `groundSensitivity` signal overrides the value of the signal of the same name in the connect module to which the ordinary module connects.

For example, you might use the `groundSensitivity` attribute in a connect module (such as `l_to_e`, below) as follows:

```
connectmodule l_to_e(dval, aval);
    ...
    electrical (* integer groundSensitivity = "global_pwr.pow1" ; *) gnd ;
    ...
endmodule
```

The default value of `gnd` in this connect module is the value of signal `global_pwr.pow1`. If module `l_to_e` connects to digital port `d` in ordinary module `sample` (below), the value of `global_pwr.pow5`, which appears in the `groundSensitivity` attribute for `d`, overrides the default value of `gnd` in the connect module.

```
module sample(d);
    output (* integer groundSensitivity = "global_pwr.pow5" ; *) d ;
    ...
endmodule
```

If port `d` does not have a `groundSensitivity` attribute, the value of `gnd` in the connect module retains its default value of `global_pwr.pow1`:

```
module sample(d);
    output d ;
    ...
endmodule
```


© 2000-2015 All Rights Reserved.

Making a connect module sensitive to supplies in the connected digital port is more likely to produce the behavior you expect because:

- When a connect module converts analog signals to digital values, the decision to output a one or a zero depends on the relationship between the analog signal and a threshold value. The software determines the threshold value based on the supply values in the component that includes the connected digital port.
- When a connect module converts digital values to analog signals, the connect module needs to determine what voltage to produce for each digital input value. Again, that voltage depends on the supplies in the component that includes the connected digital port.

The following basic principles apply to using these sensitivity attributes:

- The software inserts connect modules between a digital port and an analog net. When you use the `groundSensitivity` and `supplySensitivity` attributes, you make the connect module sensitive to the signals on the digital port, regardless of the port direction.
- There are two steps involved in establishing ground or supply sensitivity: Specifying the necessary attributes in the connect module and adding the corresponding attributes to the connected digital port definition in the ordinary module.

  Note: If the connected digital port is part of a schematic, you define the attributes on the connected pin on the schematic.
- You must use detailed discipline resolution or the sensitivity attributes have no effect.

See the following topics for more information:

- Using the Sensitivity Attributes in a Chain of Buffers on page 39
- Using Sensitivity Attributes with Inherited Connections on page 41

© 2000-2015 All Rights Reserved.

Using the Sensitivity Attributes in a Chain of Buffers

Consider a design containing three buffers, such as the following, where buffers `ba1` and `ba3` are analog blocks with analog input and output pins, and buffer `bd2` is a digital block with logic input and output pins:

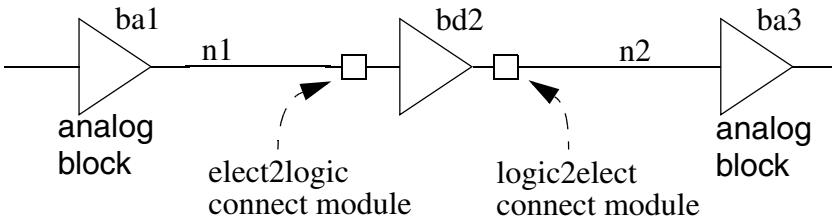

During elaboration, the software inserts connect modules across net `n1` and the digital input port of buffer `bd2`, and across the digital output port of buffer `bd2` and net `n2`.

If you know this design has an operating voltage of 5.0 Volts, you might write an analog-to-digital connect module with hard-coded thresholds, such as the following:

```
`include "disciplines.vams"
connectmodule elect2logic(aVal, dVal);
    output dVal;
    input aVal;
    logic dVal;
    electrical aVal;
    reg temp;
    always begin              // Digital, do this always
    if(V(aVal) >  3.0)
        #1 temp = 1;          // Delay 1 time unit, drive output 1
    else if (V(aVal) < 2.0)
        #1 temp = 0;          // or drive output 0, depending on aVal
    else
        #1 temp = 1'bx;
    end
    assign dVal = temp;        // Bind register to digital output
endmodule
```

However, if the design can operate at 3.0 or 5.0 Volts depending on the supplies, you might use the `supplySensitivity` and `groundSensitivity` attributes to write a connect module that is sensitive to the supplies, such as the following:

```
// Supply-sensitive connect module
`include "disciplines.vams"
connectmodule elect2logic(aVal, dVal);
    output dVal;
    input aVal;
    logic dVal;
    electrical aVal;
    electrical (* integer supplySensitivity = "cds_globals.\\vdd! " ; *) \vdd! ;
    electrical (* integer groundSensitivity = "cds_globals.\\vss! " ; *) \vss! ;
    reg temp;
    always begin                   // Do this always
    if(V(aVal) >  ((V(\vdd! ) - V(\vss! ))/2 + 0.5 ))
        #1 temp = 1;               // Delay 1 time unit, drive output 1
```


© 2000-2015 All Rights Reserved.

```
    else if (V(aVal) < ((V(\vdd! ) - V(\vss! ))/2 -0.5))
        #1 temp = 0;               // or drive output 0, depending on aVal
    else
        #1 temp = 1'bx;
    end
    assign dVal = temp;             // Bind register to digital output
endmodule
```

The threshold values are functions of the supply and ground values.

To specify the digital ports to which the connect module is sensitive, add `groundSensitivity` and `supplySensitivity` attributes to the connected digital port. In our example, the software inserts a connect module both at the input and at the output port of buffer `bd2`, so in the supply-sensitive module definition, you would add both sensitivity attributes to both ports of the buffer, like this:

```
module bux2_5V (Z,A);
input
    (* integer supplySensitivity="\\vdd! ";
       integer groundSensitivity="\\vss! "; *)
A ;
output
    (* integer supplySensitivity="\\vdd! ";
       integer groundSensitivity="\\vss! "; *)
Z;
wire \vss! ;
wire \vdd! ;
analog begin
    V(\vss! ) <+ 0.0 ;
    V(\vdd! ) <+ 5.0 ;
end
buf #1 (Z,A);
specify
    specparam
    t_A_Z_rise = 0.1,
    t_A_Z_fall = 0.1;
    // Delays
    (A +=> Z) = (t_A_Z_rise,t_A_Z_fall);
endspecify
endmodule
```


© 2000-2015 All Rights Reserved.

Using Sensitivity Attributes with Inherited Connections

An inherited connection is a net expression associated with either a signal or a terminal. You use inherited connections to override specific global names in your design. For more information, see “Inherited Connections” in the *Virtuoso Schematic Editor L User Guide*.

You can use inherited connections to set the values of signals on ports and use the supply sensitivity attributes to make a connect module sensitive to those values. By doing so, you can switch between different power supplies (that you set by inherited connections) and have connect modules that behave differently depending on the value of the supplies.

For example, here is a buffer module with both supply sensitivity attributes on both the input and the output ports (`A` and `Z`). The signal name for each of the sensitivity attributes is an inherited connection (`\\vdd!` for `supplySensitivity` and `\\vss!` for `groundSensitivity`). The `inh_conn_prop_name` and `inh_conn_def_value` attributes on wires `\vss!` and `\vdd!` set the value of the inherited connections:

```
module bux2 (Z,A);
input
    (* integer supplySensitivity="\\vdd! ";
       integer groundSensitivity="\\vss! "; *)
A ;
output
    (* integer supplySensitivity="\\vdd! ";
       integer groundSensitivity="\\vss! "; *)
Z;
wire
    (* integer inh_conn_prop_name="lSup"; // if set, specifies value for \vss!
       integer inh_conn_def_value="cds_globals.\\vss! "; *)
\vss! ; // \vss! has default value cds_globals.\\vss!
wire
    (* integer inh_conn_prop_name="hSup"; // if set, specifies value for \vdd!
       integer inh_conn_def_value="cds_globals.\\vdd! "; *)
\vdd! ; // \vdd! has default value cds_globals.\\vdd!
buf #1 (Z,A);
`ifdef functional
`else
specify
    specparam
    t_A_Z_rise = 0.1,
    t_A_Z_fall = 0.1;
    // Delays
    (A +=> Z) = (t_A_Z_rise,t_A_Z_fall);
endspecify
`endif
endmodule
```

You can compare this buffer module with `module bux2_5V` in the previous section, where the `\vss!` and `\vdd!` net values do not depend on inherited connections:

```
wire \vss! ;
wire \vdd! ;
```


© 2000-2015 All Rights Reserved.

The supply-sensitive connect module is the same as the one that appears in the previous section.

Defining Module Analog Behavior

To define the analog (continuous time) behavioral characteristics of a module, you create an analog block. The simulator evaluates all the analog blocks in the various modules of a design as though the blocks are executing concurrently.

```
analog_block ::=
        analog analog_statement

analog_statement ::=
    analog_seq_block
   |analog_branch_contribution
   |analog_indirect_branch_assignment
   |analog_procedural_assignment
   |analog_conditional_statement
   |analog_for_statement
   |analog_case_statement
   |analog_event_controlled_statement
   |system_task_enable
   |statement

statement ::=
    seq_block
   |procedural_assignment
   |conditional_statement
   |loop_statement
   |case_statement
```

`analog_statement` can appear only within the analog block.

`statement` can appear anywhere within the module, including within the analog block.

See "Sequential Block Statement" on page 93 for more information about `analog_seq_block` and `seq_block`.

In the analog block, you can code contribution statements that define relationships among analog signals in the module. For example, consider the following contribution statements:

```
V(n1, n2) <+ expression;
I(n1, n2) <+ expression;
```

where `V(n1,n2)` and `I(n1,n2)` represent potential and flow sources, respectively. You can define `expression` to be any combination of linear, nonlinear, algebraic, or differential expressions involving module signals, constants, and parameters.

The modules you write can contain at most a single analog block. When you use an analog block, you must place it after the interface declarations and local declarations.

© 2000-2015 All Rights Reserved.

Because the description in the analog block is a continuous-time behavioral description, you must not use blocking event control statements, such as blocking delays, events, or waits, within the block.

The following module includes an analog block and initial and always blocks. These blocks work together within a single module to define an analog to digital converter.

```
module adc;
electrical vin;
parameter real a_amp = 5;        // This parameter is used by analog.
parameter real d_volt_range = 5; // This parameter is used by digital.
real a_freq, a_phase;
real d_half_range;
real d_vin;
real a_vin
real d_vin_save;

reg [7:0] b;

integer ii;
integer d_fd;

initial begin
        b = 0;
        d_half_range = d_volt_range / 2;
        d_fd = $fopen("ms6.dat");
        $fstrobe(d_fd,"time\tb\td_vin\ta_vin\n");
        d_vin = 0;
end

always begin
        #1;
        d_vin =  V(vin);          // Probes the voltage.
        d_vin_save = d_vin;

        for (ii=0; ii < 8; ii = ii + 1) begin // Converts the voltage into
                                              // an 8-bit register.
                if (d_vin > d_half_range) begin
                        b[ii] = 1;
                d_vin = d_vin -  d_half_range;
                end else b[ii] = 0;
                d_vin = d_vin * 2;
        end
        // Writes the digital output to a file.
        $fstrobe(d_fd,"%g\t%b\t%g\t%g",$abstime, b, d_vin_save, a_vin);
end

analog begin
      @(initial_step) begin
                a_freq = 10K;
      end

      // input
      a_phase = 2*`M_PI*a_freq*$abstime;
      a_vin = a_amp*sin(a_phase);
      V(vin) <+ a_amp*sin(a_phase);     // Creates a sinusoidal voltage source.
end

endmodule
```


© 2000-2015 All Rights Reserved.

Defining Analog Behavior with Control Flow

You can also incorporate conditional control flow into a module. With control flow, you can define the behavior of a module in regions.

The following module, for example, describes a voltage deadband amplifier `vdba`. If the input voltage is greater than `vin_high` or less than `vin_low`, the amplifier is active. When the amplifier is active, the output is `gain` times the differential voltage between the input voltage and the edge of the deadband. When the input is in the deadband between `vin_low` and `vin_high`, the amplifier is quiescent and the output voltage is zero.

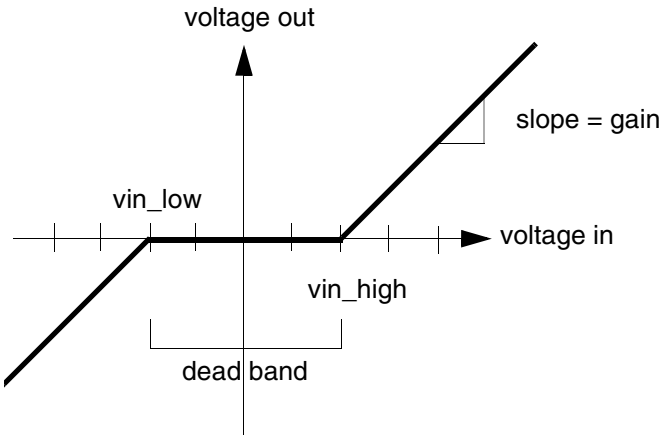


```
module vdba(in, out);
input in ;
output out ;
electrical in, out ;
parameter real vin_low = -2.0 ;
parameter real vin_high = 2.0 ;
parameter real gain = 1 from (0:inf) ;

    analog begin
         if (V(in) >= vin_high) begin
              V(out) <+ gain*(V(in) - vin_high) ;
         end else if (V(in) <= vin_low) begin
              V(out) <+ gain*(V(in) - vin_low) ;
         end else begin
              V(out) <+ 0 ;
         end
    end

endmodule
```


© 2000-2015 All Rights Reserved.

The following graph shows the response of the `vdba` module to a sinusoidal source.

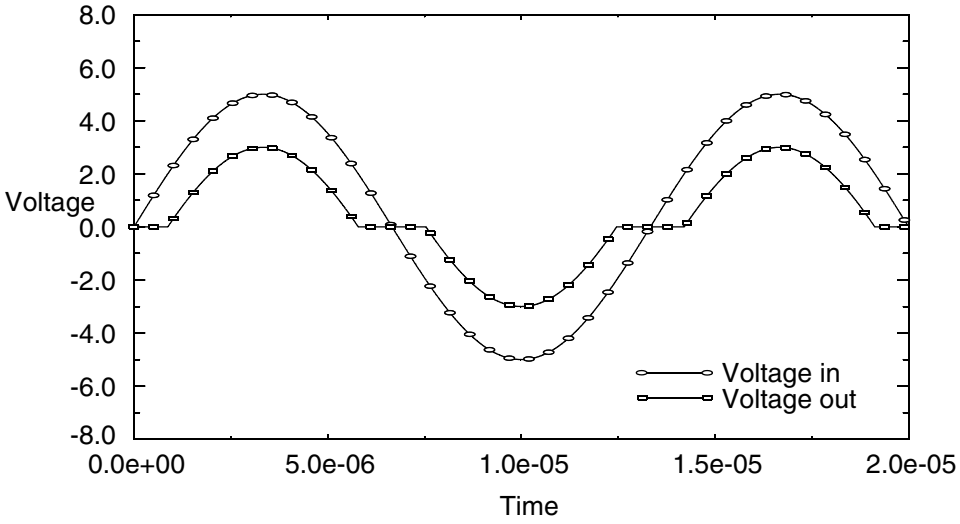

Using Integration and Differentiation with Analog Signals

The relationships that you define among analog signals can include time domain differentiation and integration. Verilog-AMS provides a time derivative function, `ddt`, and two time integral functions, `idt` and `idtmod`, that you can use to define such relationships. For example, you might write a behavioral description for an inductor as follows.

```
module induc(p, n);
inout p, n;
electrical p, n;
parameter real L = 0;

    analog
         V(p, n) <+ ddt(L * I(p, n)) ;

endmodule
```

In module `induc`, the voltage across the external ports of the component is defined as equal to the time derivative of `L` times the current flowing between the ports.

To define a higher order derivative, you must use an internal node or signal. For example, module `diff_2` defines internal node `diff`, and sets `V(diff)` equal to the derivative of `V(in)`. Then the module sets `V(out)` equal to the derivative of `V(diff)`, in effect taking the second order derivative of `V(in)`.

```
module diff_2(in, out) ;
input in ;
output out ;
electrical in, out ;
electrical diff ;    // Defines an internal node.

    analog begin
         V(diff) <+ ddt(V(in)) ;
```


© 2000-2015 All Rights Reserved.

```
        V(out) <+ ddt(V(diff)) ;
    end

endmodule
```

For time domain integration, use the `idt` or `idtmod` functions, as illustrated in module `integrator`.

```
module integrator(in, out) ;
input in ;
output out ;
electrical in, out ;

    analog begin
        V(out) <+ idt(V(in), 0) ;
    end

endmodule
```

Module `integrator` sets the output voltage to the integral of the input voltage. The second term in the `idt` function is the initial condition.

For more information on…	see…
`ddt`	"Time Derivative Operator" on page 165
`idtmod`	"Circular Integrator Operator" on page 167
`idt`	"Time Integral Operator" on page 166

© 2000-2015 All Rights Reserved.

Using Internal Nodes in Modules

Using Verilog-AMS, you can implement complex designs in a variety of different ways. For example, you can define behavior in modules at the leaf level and use the top-level module to define the structure of the system. You can also define structure within modules by defining internal nodes. With internal nodes, you can directly define behavior in the module, or you can introduce internal nodes as a means of solving higher order differential equations that define the network.

Using Internal Nodes in Behavioral Definitions

Consider the following RLC circuit.

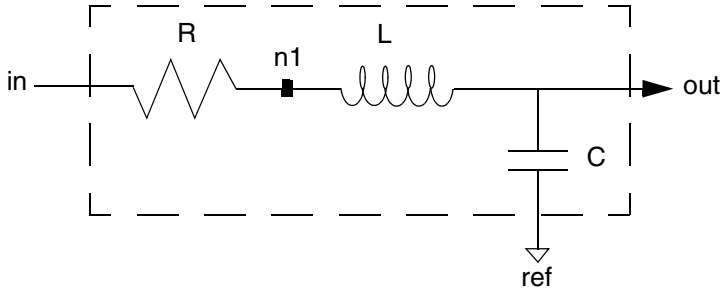

Module `rlc_behav` uses an internal node `n1` and the ports `in`, `ref`, and `out`, to define directly the behavioral characteristics of the RLC circuit. Notice how `n1` does not appear in the list of ports for the module.

```
module rlc_behav(in, out, ref) ;
inout in, out, ref ;
electrical in, out, ref ;
parameter real R=1, L=1, C=1 ;

    electrical n1 ;

    analog begin
         V(in, n1) <+ R*I(in, n1) ;
         V(n1, out) <+ L*ddt(I(n1, out)) ;
         I(out, ref) <+ C*ddt(V(out, ref)) ;
    end

endmodule
```


© 2000-2015 All Rights Reserved.

Using Internal Nodes in Higher Order Systems

You can also represent the RLC circuit by its governing differential equations. The transfer function is given by

$$H(s) = \frac{1}{LCs^2 + RCs + 1} = \frac{V_{out}}{V_{in}}$$

In the time domain, this becomes

$$V_{out} = V_{in} - R \cdot C \cdot V_{out} - L \cdot C \cdot V_{out}$$

If you set

$$V_{n1} = \dot{V}_{out}$$

you can write

$$V_{out} = V_{in} - R \cdot C \cdot V_{n1} - L \cdot C \cdot V_{n1}$$

Module `rlc_high_order` implements these descriptions.

```
module rlc_high_order(in, out, ref) ;
inout in, out, ref ;
electrical in, out, ref ;
parameter real R=1, L=1, C=1 ;

    electrical n1 ;

    analog begin
         V(n1, ref) <+ ddt(V(out, ref)) ;
         V(out, ref) <+ V(in) - (R*C*V(n1) - L*ddt(V(n1))*C ;
    end

endmodule
```


© 2000-2015 All Rights Reserved.

3

Lexical Conventions

A Cadence® Verilog®-AMS source text file is a stream of lexical tokens arranged in free format. For information, see, in this chapter,

- White Space on page 50
- Comments on page 50
- Identifiers on page 50
- Numbers on page 52
- Strings on page 54

See also

- Operators for Analog Blocks on page 101
- The information about strings in Displaying Results on page 186
- Verilog-AMS Keywords on page 455

© 2000-2015 All Rights Reserved.

White Space

White space consists of blanks, tabs, new-line characters, and form feeds. Verilog-AMS ignores these characters except in strings or when they separate other tokens. For example, this code fragment

```
$strobe("bit error rate = %f%%",
    100.0 * errors / bits ) ;
```

is syntactically identical to:

```
$strobe("bit error rate = %f%%",100.0*errors/bits);
```

Comments

In Verilog-AMS, you can designate a comment in either of two ways.

- A one-line comment starts with the two characters `//` (provided they are not part of a string) and ends with a new-line character. Within a one-line comment, the characters `//`, `/*`, and `*/` have no special meaning. A one-line comment can begin anywhere in the line.

  ```
  //
  // This code fragment contains four one-line comments.
  parameter real vos ; // vos is the offset voltage
  //
  ```

- A block comment starts with the two characters `/*` (provided they are not part of a string) and ends with the two characters `*/`. Within a block comment, the characters `/*` and `//` have no special meaning.

  ```
  /*
  * This is an example of a block comment. A block
  comment can continue over several lines, making it
  easy to add extended comments to your code.
  */
  ```

Identifiers

You use an identifier to give a unique name to an object, such as a variable declaration or a module, so that the object can be referenced from other places. There are two kinds of identifiers: *ordinary identifiers* and *escaped names*. Both kinds are case sensitive.

© 2000-2015 All Rights Reserved.

Ordinary Identifiers

The first character of an ordinary identifier must be a letter or an underscore character (_), but the remaining characters can be any sequence of letters, digits, dollar signs ($), and the underscore. Examples include

```
unity_gain_bandwidth
holdValue
HoldTime
_bus$2
```

Escaped Names

Escaped names start with the backslash character (\) and end with white space. Neither the backslash character nor the terminating white space is part of the identifier. Therefore, the escaped name `\pin2` is the same as the ordinary identifier `pin2`.

An escaped name can include any of the printable ASCII characters (the decimal values 33 through 126 or the hexadecimal values 21 through 7E). Examples of escaped names include

```
\busa+index
\-clock
\!!!error-condition!!!
\net1\\net2
\{a,b}
\a*(b+c)
```

Scope Rules

In Verilog-AMS, each module, task, function, analog function, and named block that you define creates a new scope. Within a scope, an identifier can declare only one item. This rule means that within a scope you cannot declare two variables with the same name, nor can you give an instance the same name as a node connecting that instance.

Any object referenced from a named block must be declared in one of the following places.

- Within the named block
- Within a named block or module that is higher in the branch of the name tree

To find a referenced object, the simulator first searches the local scope. If the referenced object is not found in the local scope, the simulator moves up the name tree, searching through containing named blocks until the object is found or the module boundary is reached. If the module boundary is reached before the object is found, the simulator issues an error.

© 2000-2015 All Rights Reserved.

Numbers

Verilog-AMS supports two basic literal data types for arithmetic operations: *integer numbers* and *real numbers*.

Integer Numbers

The syntax for an integer constant is

```
integer_number ::=
        [ sign ] unsign_num
    |   digital_octal_number
    |   digital_binary_number
    |   digital_hex_number

sign ::=
        + | -

unsign_num ::=
        decimal_digit { _ | decimal_digit }

decimal_digit ::=
        0 | 1 | 2 | 3 | 4 | 5 | 6 | 7 | 8 | 9
```

For information about `digital_octal_number`, `digital_binary_number`, and `digital_hex_number`, see the “Numbers” section in the “Lexical Conventions” chapter, of the *Verilog-XL Reference*

The simulator ignores the underscore character (_), so you can use it anywhere in a decimal number except as the first character. Using the underscore character can make long numbers more legible.

Examples of integer constants include

```
277195000
277_195_000     //Same as the previous number
-634            //A negative number
0005
'b100x11z0      //A binary number with unknowns
```

Real Numbers

The syntax for a real constant is

```
real_number ::=
        [ sign ] unsign_num .unsign_num
    |   [ sign ] unsign_num [.unsign_num] e [ sign ] unsign_num
    |   [ sign ] unsign_num [.unsign_num] E [ sign ] unsign_num
    |   [ sign ] unsign_num [.unsign_num ] unit_letter

sign ::=
        + | -
```


© 2000-2015 All Rights Reserved.

```
unsign_num ::=
        decimal_digit { _ | decimal_digit }
decimal_digit ::=
        0 | 1 | 2 | 3 | 4 | 5 | 6 | 7 | 8 | 9
unit_letter ::=
        T | G | M | K | P | k | m | u | n | p | f | a
```

`unit_letter` represents one of the scale factors listed in the following table. If you use `unit_letter`, you must not have any white space between the number and the letter. Be certain that you use the correct case for the `unit_letter`.

unit_letter	Scale factor	unit_letter	Scale factor
T =	10^{12}	k =	10^{3}
G =	10^{9}	m =	10^{-3}
M =	10^{6}	u =	10^{-6}
K =	10^{3}	n =	10^{-9}
P=	10^{15}	p =	10^{-12}
		f =	10^{-15}
		a =	10^{-18}

The simulator ignores the underscore character (_), so you can use it anywhere in a real number except as the first character. Using the underscore character can make long numbers more legible.

Examples of real constants include

```
2.5K              // 2500
1e-6              // 0.000001
-9.6e9
-1e-4
0.1u
50p               // 50 * 10e-12
1.2G              // 1.2 * 10e9
213_116.223_642
```

For information on converting real numbers to integer numbers, see "Converting Real Numbers to Integer Numbers" on page 60.

© 2000-2015 All Rights Reserved.

Strings

A string is a sequence of characters enclosed by quotation marks and contained on a single line. Strings used as operands in expressions and assignments are treated as unsigned integer constants represented by a sequence of 8-bit ASCII values, with one 8-bit ASCII value representing one character.

String variables, which are not supported in analog contexts, are variables of reg type with width equal to the number of characters in the string multiplied by 8.

For example, to store the 12 characters of the string “Hello world!” requires a reg 8 * 12, or 96 bits wide.

```
reg [8*12:1] stringvar ;
initial begin
    stringvar = “Hello world!” ;
end
```

When a variable is larger than required to hold a value being assigned, the contents on the left are padded with zeros after the assignment. This is consistent with the padding that occurs during the assignment of nonstring values. If a string is larger than the destination string variable, the string is truncated to the left, and the leftmost characters are lost.

Strings can be manipulated using the Verilog HDL operators. The value being manipulated by the operator is the sequence of 8-bit ASCII values. For example,

```
module string_test;
reg [8*14:1] stringvar;
initial begin
stringvar = "Hello world";
$display("%s is stored as %h", stringvar,stringvar);
stringvar = {stringvar,"!!!"};
$display("%s is stored as %h", stringvar,stringvar);
end
endmodule
```

The output is

```
Hello world is stored as 00000048656c6c6f20776f726c64
Hello world!!! is stored as 48656c6c6f20776f726c64212121
```


© 2000-2015 All Rights Reserved.

Standard Attributes

The standard attributes for descriptions and units have a special meaning for variables declared at module scope. Module scope variables with a description or units attribute, or both, are known as output variables and Cadence tools provide access to their values. Also, Cadence tools print the names, values, units, and descriptions of output variables for primitives when displaying operating-point information.

The standard attribute `op` specifies whether or not a parameter or a variable should be included in the report containing the most useful operating point values. You must specify either `yes` or `no` as a value to the attribute. If you specify `yes` as the value, the parameter or variable is included in the report.

The standard attribute `multiplicity` scales the value of the parameter or variable for reporting. You must specify one of the following as a value to the attribute: `multiply`, `divide`, or `none`. If you specify `multiply` as a value to the attribute, the value of the parameter or variable is multiplied by the value of `$mfactor` for the instance in any report of operating-point values. If you specify `divide` as a value to the attribute, the value of the parameter or variable is divided by the value of `$mfactor` for the instance in any report of operating-point values. If you do not specify any value for the attribute, or specify `none` as a value, scaling is not performed.

Note: In this release, the `multiplicity` attribute behaves as though the attribute is assigned the value `none`, regardless of the value you actually use. This means that no scaling is performed when you use the `multiplicity` attribute.

For example, a module for a MOS transistor with the following declaration at module scope provides the

```
output variable cgs.
(* desc="gate-source capacitance", units="F" *)
real cgs;
```

An operating-point display from Cadence tools includes the following information:

```
cgs=4.21e-15 F
```

Descriptions for instance parameters of `mos_inst`:

`cgs`: gate-source capacitance

Units and descriptions specified for block-level variables are ignored by the simulator, but can be used for documentation purposes.

© 2000-2015 All Rights Reserved.

© 2000-2015 All Rights Reserved.

4

Data Types and Objects

The Cadence® Verilog®-AMS language defines these data types and objects. For information about how to use them, see the indicated locations.

- Real Numbers on page 60
- Parameters on page 62
- Dynamic Parameters on page 68
- Local Parameters on page 69
- Genvars on page 70
- Natures on page 70
- Disciplines on page 74
- Net Disciplines on page 80
- Ground Nodes on page 82
- Real Nets on page 83
- Named Branches on page 86
- Implicit Branches on page 87

- Digital Nets and Registers

  For information about digital nets and registers, see the “Registers and Nets” section, in the “Data Types” chapter of the *Verilog-XL Reference*.

© 2000-2015 All Rights Reserved.

Output Variables

© 2000-2015
All Rights Reserved.

Integer Numbers

Use the `integer` declaration to declare variables of type integer.

```
integer_declaration ::=
        integer list_of_identifiers ;

list_of_identifiers ::=
        var_name { , var_name}

var_name ::=
        variable_identifier [ =integer_constant_expression ]
    |   array_identifier [ range ] [=integer_constant_arrayinit ]

range ::=
        upper_limit_const_exp : lower_limit_const_exp

integer_constant_arrayinit ::=
        '{ integer_array_init_element_list }

integer_array_init_element_list ::=
        integer_constant_expression { , integer_constant_expression }
```

In Verilog-AMS, you can declare an integer number in a range at least as great as -2^{31} (-2,147,483,648) to $2^{31}-1$ (2,147,483,647).

To declare an array, specify the upper and lower indexes of the range. Be sure that each index is a constant expression that evaluates to an integer value.

```
integer a[1:64] ;          // Declares array of 64 integers
integer b, c, d[-20:0] ;   // Declares 2 integers and an array

parameter integer max_size = 15 from [1:50] ;
integer cur_vector[1:max_size] ;
/* If the max_size parameter is not overridden, the
previous two statements declare an array of 15 integers. */

integer x=13; //Declare an integer variable x and assign a value 13 to it
integer arr[1:3]={1,2,3}; // Declare an integer array and assign it the values
{1,2,3}
```

The standard attributes for descriptions and units can be used with integer declarations. For example,

```
(* desc="index number", units="index" *) integer indx;
```

Although the `desc` and `units` attributes are allowed, Cadence tools, in this release, do nothing with the information.

Important

Integers have different default initial values depending on how they are used. Integer variables whose values are assigned in an analog context default to an initial value of zero. Integer variables whose values are assigned in a digital context default to an initial value of `x`.

© 2000-2015 All Rights Reserved.

Real Numbers

Use the `real` declaration to declare variables of type real.

```
real_declaration ::=
        real list_of_identifiers ;

list_of_identifiers ::=
        var_name { , var_name }

var_name ::=
        variable_identifier [ =real_constant_expression ]
    |   array_identifier [ range ] [ =real_constant_arrayinit ]

range ::=
        upper_limit_const_exp : lower_limit_const_exp

real_constant_arrayinit ::=
        '{ real_array_init_element_list }

real_array_init_element_list ::=
        real_constant_expression { , real_constant_expression }
```

In Verilog-AMS, you can declare real numbers in a range at least as great as 10^{-37} to 10^{+37}. To declare an array of real numbers, specify the upper and lower indexes of the range. Be sure that each index is a constant expression that evaluates to an integer value.

```
real a[1:64] ;         // Declares array of 64 reals
real b, c, d[-20:0] ;  // Declares 2 reals and an array of reals

parameter integer min_size = 1, max_size = 30 ;
real cur_vector[min_size:max_size] ;
/* If the two parameters are not overridden, the
previous two statements declare an array of 30 reals. */

real x=13.1; //Declare an real variable x and assign a value 13.1 to it
real arr[1:3]={1.1,2.2,3.3}; // Declare an real array and assign it the values
{1.1,2.2,3.3}
```

Real variables have default initial values of zero.

The standard attributes for descriptions and units can be used with real declarations. For example,

```
(* desc="gate-source capacitance", units="F" *) real cgs;
```

Although the `desc` and `units` attributes are allowed, Cadence tools, in this release, do nothing with the information.

Converting Real Numbers to Integer Numbers

Verilog-AMS converts a real number to an integer number by rounding the real number to the nearest integer. If the real number is equally distant from the two nearest integers, Verilog-AMS converts the real number to the integer farthest from zero. The following code fragment illustrates what happens when real numbers are assigned to integer numbers.

© 2000-2015 All Rights Reserved.

```
integer     intvalA, intvalB, intvalC ;
real        realvalA, realvalB, realvalC ;

realvalA = -1.7 ;
intvalA = realvalA ; // intvalA is -2

realvalB = 1.5 ;
intvalB = realvalB ; // intvalB is 2

realvalC = -1.5 ;
intvalC = realvalC ; // intvalC is -2
```

If either operand in an expression is real, Verilog-AMS converts the other operand to real before applying the operator. This conversion process can result in a loss of information.

```
real realvar ;
realvar = 9.0 ;
realvar = 2/3 * realvar ; // realvar is 9.0, not 6.0
```

In this example, both 2 and 3 are integers, so 1 is the result of the division. Verilog-AMS converts 1 to 1.0 before multiplying the converted number by 9.0.

Strings

Use the `string` declaration to declare the variables of type string.

```
string_declaration ::=
    string list_of_identifiers ;

list_of_identifiers ::=
    variable_identifier { , variable_identifier}
```

A string is defined as follows:

```
string ::=
    " { Any_ASCII_character_except_newline } "
```

The following are some examples of the string variable:

```
string s1=”mystring”; //sets s1 to mystring

string s1; // sets s1 to a null value

initial s2=s1 // assigns s2 the value of string variable s1
```

You can use the string variable in both digital and analog blocks. In addition, the string variable written in analog block can be read in the digital block and vice versa. However, you cannot have a string variable specified in both digital and analog blocks in the same module.

The following example shows a string variable written in the analog block and read in the digital block:

```
module top;
   electrical e;
   string ab;
   initial begin
```


© 2000-2015 All Rights Reserved.

```
      #2 $display("digital block: ", ab);
   end
   analog begin
      ab = "atest string";
      V(e) <+ 1.4;
   end
endmodule
```

You can use the `==`, `!=`, `<`, `<=`, `>`, `>=` `{Str1, Str2.... Strm}`, and `{multiplier{Str}}` operators with the string variable.

Note: Currently, the Verilog-AMS string data type does not support built-in functions.

Parameters

Use the `parameter` declaration to specify the parameters of a module.

```
parameter_declaration ::=
        parameter [opt_type] list_of_param_assignments ;
opt_type ::=
        real
    |   integer
    |   string
list_of_param_assignments ::=
        declarator_init {, declarator_init }
declarator_init ::=
        parameter_id = constant_exp { opt_value_range }
    |   parameter_array_init
```

`opt_type` is described in "Specifying a Parameter Type" on page 63. Note that for parameter arrays, however, you must specify a type.

`opt_value_range` is described in "Specifying Permissible Values" on page 64.

`parameter_id` is the name of a parameter being declared.

`param_array_init` is described in "Specifying Parameter Arrays" on page 65.

As specified in the syntax, the right-hand side of each `declarator_init` assignment must be a constant expression. You can include in the constant expression only constant numbers and previously defined parameters or dynamic parameters.

Parameters are constants, so you cannot change the value of a parameter at runtime. However, you can customize module instances by changing parameter values during compilation. See "Overriding Parameter Values in Instances" on page 213 for more information.

© 2000-2015 All Rights Reserved.

Consider the following code fragment. The parameter `superior` is defined by a constant expression that includes the parameter `subord`.

```
parameter integer subord = 8 ;
parameter integer superior = 3 * subord ;
```

In this example, changing the value of `subord` changes the value of `superior` too because the value of `superior` depends on the value of `subord`.

The standard attributes for descriptions and units can be used with parameter declarations. For example,

```
(* desc="Resistance", units="ohms" *) parameter real res = 1.0 from [0:inf);
```

Although the `desc` and `units` attributes are allowed, Cadence tools, in this release, do nothing with the information.

For example, to run the `ahdlLib.res` cell in Monte Carlo, you modify the Verilog-A model to be something like this:

```
module res(vp, vn);
inout vp, vn;
electrical vp, vn;
(* cds_inherited_parameter *) parameter real monteres = 0;
parameter real r = 1k;
localparam real r_effective = r + monteres; // nominal resistance plus
    // monte-carlo mismatch effect

analog
      V(vp, vn) <+ (r_effective)*I(vp, vn);

endmodule
```

In this case, `monteres` is the mismatch parameter. It must be defined in a model deck as a `parameters` statement or be defined in the design variables section of the user interface.

You also need a `statistics mismatch` block in your model deck that describes the distribution for `monteres`. For example:

```
parameters monteres=10

statistics {
  mismatch {
    vary monteres dist=gauss std=5
  }
}
```

Specifying a Parameter Type

You must specify a default for each parameter you define, but the parameter type specifier is optional (except that you must specify a type for parameter arrays). If you omit the parameter type specifier, Verilog-AMS determines the parameter type from the constant expression. If

© 2000-2015 All Rights Reserved.

you do specify a type, and it conflicts with the type of the constant expression, your specified type takes precedence.

Implicitly declared types and explicitly declared types can make parameter values look different when you examine their values. For example, you create a module `testtype`.

```
module testtype;
parameter  c= {3'b000, 3'b111}, f= 3.4;
parameter integer c1 = {3'b000, 3'b111}, f1 = 3.4;
endmodule
```

You then use Tcl commands to examine the values:

```
ncsim> describe c
c..........parameter [5:0] = 6'h07
ncsim> describe c1
c1........parameter (integer) = 7
ncsim> describe f
f..........parameter (real) = 3.4
ncsim> describe f1
f1........parameter (integer) = 3
```

These results occur because `c` is a 6-bit value but `c1` is a 32-bit value (because it is explicitly declared as an integer).

The three parameter declarations in the following examples all have the same effect. The first example illustrates a case where the type of the expression agrees with the type specified for the parameter.

```
parameter integer rate = 13 ;
```

The second example omits the parameter type, so Verilog-AMS derives it from the integer type of the expression.

```
parameter rate = 13 ;
```

In the third example, the expression type is real, which conflicts with the specified parameter type. The specified type, integer, takes precedence.

```
parameter integer rate = 13.0
```

In all three cases, `rate` is declared as an integer parameter with the value 13.

Specifying Permissible Values

Use the optional range specification to designate permissible values for a parameter. If you need to, you can specify more than one range.

```
opt_value_range ::=
        from value_range_specifier
    |   exclude value_range_specifier
    |   exclude value_constant_expression
```


© 2000-2015 All Rights Reserved.

```
value_range_specifier ::=
        start_paren expression1 : expression2 end_paren
start_paren ::=
        [
    |   (
end_paren ::=
        ]
    |   )
expression1 ::=
        constant_expression
    |   -inf
expression2 ::=
        constant_expression
    |   inf
```

Ensure that the first expression in each range specifier is smaller than the second expression. Use a bracket, either "[" for the lower bound or "]" for the upper, to include an end point in the range. Use a parenthesis, either "(" for the lower bound or ")" for the upper, to exclude an end point from the range. To indicate the value infinity in a range, use the keyword `inf`. To indicate negative infinity, use `-inf`.

For example, the following declaration gives the parameter `cur_val` the default of -15.0. The range specification allows `cur_val` to acquire values in the range -∞< `cur_val` < 0.

```
parameter real maxval = 0.0 ;
parameter real cur_val = -15.0 from (-inf:maxval) ;
```

The following declaration

```
parameter integer pos_val = 30 from (0:40] ;
```

gives the parameter `pos_val` the default of 30. The range specification for `pos_val` allows it to acquire values in the range 0 < `pos_val` <= 40.

In addition to defining a range of permissible values for a parameter, you can use the keyword `exclude` to define certain values as illegal.

```
parameter low = 10 ;
parameter high = 20 ;
parameter integer intval = 0 from [0:inf) exclude (low:high] exclude 5 ;
```

In this example, both a range of values, 10 < value <= 20, and the single value 5 are defined as illegal for the parameter `intval`.

Specifying Parameter Arrays

Use the parameter array initiation part of the parameter declaration ("Parameters" on page 62) to specify information for parameter arrays.

```
parameter_array_init ::=
        parameter_array_id range = constant_param_arrayinit {opt_value_range}
```


© 2000-2015 All Rights Reserved.

```
range ::=
        [ constant_expression : constant_expression ]

constant_param_arrayinit ::=
        { param_arrayinit_element_list }
    |   `{ param_arrayinit_element_list }
    |   `{ replicator_element_list }

param_arrayinit_element_list ::=
        constant_expression { , constant_expression }

replicator_element_list ::=
    |   replicator_constant_expression {constant_expression}
```

parameter_array_id is the name of a parameter array being declared.

opt_value_range is described in "Specifying Permissible Values" on page 64.

replicator_constant_expression is an integer constant with a value greater than zero that specifies the number of times the associated constant_expression is to be included in the element list.

For example, parameter arrays might be declared and used as follows:

```
parameter integer
   IVgc_length = 4;

parameter real
   I_gc[1:IVgc_length] = `{4{0.00}};
   V_gc[1:IVgc_length] = `{-5.00, -1.00,  5.00, 10.00};
```

Parameter arrays are subject to the following restrictions:

- The type of a parameter array must be specified in the declaration.
- An array assigned to an instance of a module must be of the exact size of the array bounds of that instance.
- If the array size is changed via a parameter assignment, the parameter array must be assigned an array of the new size from the same module as the parameter assignment that changed the parameter array size.

String Parameters

Use the string parameter declaration to declare a parameter of type string.

```
string_parameter_declaration ::=
    parameter string stringparam = constant_expression {value_range};
```

stringparam is the name of the string parameter being declared.

constant_expression is the value to be assumed by stringparam.

© 2000-2015 All Rights Reserved.

For example, the following code declares a string parameter named `tmdata` and assigns the value `table1.dat` to it.

```
parameter string tmdata = "table1.dat" ;
```

In Verilog-AMS, the string parameter supports a range value. The range value must be enclosed in curly braces and preceded with an apostrophe (‘), as shown in the following example:

```
parameter string transistortype = "NMOS" from '{ "NMOS", "PMOS" };
parameter string filename = "output.dat" exclude '{ "" };
```

The string parameter can be used in both digital and analog blocks.

The parameter values can be overridden by using the `defparam` statement or by using the module instantiation statement (see Overriding Parameter Values in Instances on page 213).

Parameter Aliases

Use the `aliasparam` declaration to define one or more aliases for a parameter. With this capability, you can define alternative names that can be used for overriding module parameter values.

```
aliasparam_declaration ::=
        aliasparam alias_identifier = parameter_identifier ;
```

Parameter aliases are subject to the following restrictions.

- The type of `alias_identifier` (real, integer, or string) is determined by the `parameter_identifier`, and its range of permissible values, if they are specified.
- There can be multiple aliases pointing to the same `parameter_identifier`.
- The `alias_identifier` must not conflict with a different `parameter_identifier`.
- The `alias_identifier` must not be used for any other object in the module. Equations in the module must reference `parameter_identifier`, not `alias_identifier`.

You must not use both `alias_identifier` and its corresponding `parameter_identifier` to specify a parameter override. Similarly, you must not use multiple aliases corresponding to a single `parameter_identifier` to specify a parameter override.

For example, the module nmos includes the following declarations.

```
parameter real dtemp = 0 from [-`P_CELSIUS0:inf) ;
aliasparam trise = dtemp ;
```


© 2000-2015 All Rights Reserved.

The first two instantiations of the module below are valid, but the third is not.

```
nmos #(.trise(5)) m1(.d(d), .g(g), .s(s), .b(b)) ;
nmos #(.dtemp(5)) m2(.d(), .g(g), .s(s), .b(b)) ;
nmos #(.trise(5), .dtemp(5)) m3(.d(d), .g(g), .s(s), .b(b)) ; // Illegal.
```

The third instantiation is illegal because overrides are specified for the parameter dtemp and also its alias trise.

You can also define an alias for the hierarchical system parameter function `$mfactor`, as shown below.

```
aliasparam my_m = $mfactor
```

Dynamic Parameters

Use the `dynamicparam` declaration to specify the parameters of a module.

```
parameter_declaration ::=
        dynamicparam [opt_type] list_of_param_assignments ;
```

The use of dynamic parameters enables you to change the value of a parameter during simulation. It also allows you to reference global parameters without having their values passed down through the hierarchy. This is done by supporting OOMR parameter references in `defparam` value expressions and parameter default value expressions.

Following are some important points that must be kept in mind while using dynamic parameters in Verilog-AMS.

- Dynamic parameters can be used at all places where normal parameters can be used. They are set exactly like normal parameters. In addition, dynamic parameters are evaluated as part of the normal parameter evaluation process as if they were normal parameters.
- In contrast to normal parameters, OOMR references to dynamic parameters are allowed in `defparams`.

  Example:

  ```
  module top();
  dynamicparam myvar = 0.133;

  Boo B1;
  ...
  ...
  endmodule
  ```


© 2000-2015 All Rights Reserved.

```
module Boo
Foo F1;

defparam top.B1.F1.param1 = top.myvar*3; // defparam usage

endmodule
```

- Although OOMR references are not allowed in parameter assignments, the same effect can be achieved by having a local `defparam`.

  Example:

```
module Foo();
parameter param1 = 0;

defparam param1 = top.myvar*2; // equivalent to allowing defparams to default
                               // parameter values
endmodule
```

- It is illegal for a dynamic parameter to affect design topology.
- It is illegal for a parameter value that is dependent on dynamic parameters to affect design topology. A parameter is dependent on a dynamic parameter if the value of the dynamic parameter has an affect on the final computed value of that parameter.
- It is illegal for a parameter value that is dependent on dynamic parameters to be referenced from a digital context.

Local Parameters

Use the `localparam` declaration to specify the parameters of a module.

```
parameter_declaration ::=
        localparam [opt_type] list_of_param_assignments ;
```

You cannot directly modify local parameters using ordered or named parameter value assignments or the `defparam` statement.

Paramsets are subject to the following restrictions:

- You cannot use the `alter` and `altergroup` statements when you use paramsets.
- You cannot store paramsets in the Cadence library.cell:view configurations (or “5x” configurations).

© 2000-2015 All Rights Reserved.

Genvars

Use the `genvar` declaration to specify a list of integer-valued variables used to compose static expressions for use with behavioral loops.

```
genvar_declaration ::=
    genvar genvar_identifier {, genvar_identifier}
```

Genvar variables can be assigned only in limited contexts, such as accessing analog signals within behavioral looping constructs. For example, in the following fragment, the genvar variable `i` can only be assigned within the control of the `for` loop. Assignments to the genvar variable `i` can consist of only expressions of static values, such as parameters, literals, and other genvar variables.

```
genvar i ;
analog begin
    ...
    for (i = 0; i < 8; i = i + 1) begin
         V(out[i]) <+ transition(value[i], td, tr) ;
    end
    ...
end
```

The next example illustrates how genvar variables can be nested.

```
module gen_case(in,out);
input [0:1] in;
output [0:1] out;
electrical [0:1] in;
electrical [0:1] out;
genvar i, j;

  analog begin
    for( i=1 ; i<0 || i <= 4; i = i + 1 ) begin
      for( j = 0 ; j < 4 ; j = j + 1 ) begin
        $strobe("%d %d", j, i);
      end
    end

    for( j = 0; j < 2; j = j + 1 ) begin
      V(out[j], in[j]) <+ I(out[j], in[j]);
    end
  end

endmodule
```

A *genvar expression* is an expression that consists of only literals and genvar variables. You can also use the `$param_given` function in genvar expressions.

Natures

Use the nature declaration to define a collection of attributes as a nature. The attributes of a nature characterize the analog quantities that are solved for during a simulation. Attributes define the units (such as meter, gram, and newton), access symbols and tolerances

© 2000-2015 All Rights Reserved.

associated with an analog quantity, and can define other characteristics as well. After you define a nature, you can use it as part of the definition of disciplines and other natures.

```
nature_declaration ::=
        nature nature_name
        [ nature_descriptions ]
        endnature

nature_name ::=
        nature_identifier

nature_descriptions ::=
        nature_description
    |   nature_description nature_descriptions

nature_description ::=
        attribute = constant_expression ;

attribute ::=
        abstol
    |   access
    |   ddt_nature
    |   idt_nature
    |   units
    |   identifier
    |   Cadence_specific_attribute

Cadence_specific_attribute ::=
        huge
    |   blowup
    |   maxdelta
```

Each of your nature declarations must

- Be named with a unique identifier
- Include all the required attributes listed in Table 4-3 on page 73.
- Be declared at the top level

  This requirement means that you cannot nest nature declarations inside other nature, discipline, or module declarations.

The Verilog-AMS language specification allows you to define a nature in two ways. One way is to define the nature directly by describing its attributes. A nature defined in this way is a *base nature*, one that is not derived from another already declared nature or discipline.

The other way you can define a nature is to derive it from another nature or a discipline. In this case, the new nature is called a *derived nature*.

Note: This release of Verilog-AMS does not support derived natures.

© 2000-2015 All Rights Reserved.

Declaring a Base Nature

To declare a base nature, you define the attributes of the nature. For example, the following code declares the nature `current` by specifying five attributes. As required by the syntax, the expression associated with each attribute must be a constant expression.

```
nature Mycurrent
    units = "A" ;
    access = I ;
    idt_nature = charge ;
    abstol = 1e-12 ;
    huge = 1e6 ;
endnature
```

Verilog-AMS provides the predefined attributes described in the “Predefined Attributes” table. Cadence provides the additional attributes described in Table 4-2 on page 73. You can also declare user-defined attributes by declaring them just as you declare the predefined attributes. The Cadence AMS Designer simulator ignores user-defined attributes, but other simulators might recognize them. When you code user-defined attributes, be certain that the name of each attribute is unique in the nature you are defining.

The following table describes the predefined attributes.

Table 4-1 Predefined Attributes

Attribute	Description
`abstol`	Specifies a tolerance measure used by the simulator to determine when potential or flow calculations have converged. `abstol` specifies the maximum negligible value for signals associated with the nature. For more information, see “Convergence” on page 265.
`access`	Identifies the name of the access function for this nature. When this nature is bound to a potential value, `access` is the access function for the potential. Similarly, when this nature is bound to a flow value, `access` is the access function for the flow. Each access function must have a unique name.
`units`	Specifies the units to be used for the value accessed by the access function.
`idt_nature`	Specifies a nature to apply when the `idt` or `idtmod` operators are used. **Note**: This release of Verilog-AMS ignores this attribute.
`ddt_nature`	Specifies a nature to apply when the `ddt` operator is used. **Note**: This release of Verilog-AMS ignores this attribute.

© 2000-2015 All Rights Reserved.

The next table describes the Cadence-specific attributes.

Table 4-2 Cadence-Specific Attributes

Attribute	Description
`huge`	Specifies the maximum change in signal value allowed during a single iteration. The simulator uses `huge` to facilitate convergence when signal values are very large. Default: 45.036e06
`blowup`	Specifies the maximum allowed value for signals associated with the nature. If the signal exceeds this value, the simulator reports an error and stops running. Default: 1.0e09
`maxdelta`	Specifies the maximum change allowed on a Newton-Raphson iteration. Default: 0.3

The next table specifies the requirements for the predefined and Cadence-specific attributes.

Table 4-3 Attribute Requirements

Attribute	Required or optional?	The constant expression must be
`abstol`	Required	A real value
`access`	Required for all base natures	An identifier
`units`	Required for all base natures	A string
`idt_nature`	Optional	The name of a nature defined elsewhere
`ddt_nature`	Optional	The name of a nature defined elsewhere
`huge`	Optional	A real value
`blowup`	Optional	A real value
`maxdelta`	Optional	A real value

Consider the following code fragment, which declares two base natures.

```
nature Charge
    abstol = 1e-14 ;
    access = Q ;
    units = "coul" ;
    blowup = 1e8 ;
endnature
```


© 2000-2015 All Rights Reserved.

```
nature Current
    abstol = 1e-12 ;
    access = I ;
    units = "A" ;
endnature
```

Both nature declarations specify all the required attributes: `abstol`, `access`, and `units`. In each case, `abstol` is assigned a real value, `access` is assigned an identifier, and `units` is assigned a string.

The `Charge` declaration includes an optional Cadence-specific attribute called `blowup` that ends the simulation if the charge exceeds the specified value.

Disciplines

Use the discipline declaration to specify the characteristics of a discipline. You can then use the discipline to declare nets and regs. You can also associate disciplines with ports, as discussed in Chapter 11, “Mixed-Signal Aspects of Verilog-AMS.” Cadence provides definitions of many commonly used disciplines in the `disciplines.vams` file installed in *your_install_dir*/tools/spectre/etc/ahdl.

```
discipline_declaration ::=
        discipline discipline_identifier
            [ discipline_description { discipline_description } ]
        enddiscipline

discipline_description ::=
        nature_binding
    |   domain_binding

nature_binding ::=
        potential nature_identifier ;
    |   flow nature_identifier ;

domain_binding ::=
        domain continuous ;
    |   domain discrete ;
```

You must declare a discipline at the top level. In other words, you cannot nest a discipline declaration inside other discipline, nature, or module declarations. Discipline identifiers have global scope, so you can use discipline identifiers to associate nets with disciplines (declare nets) inside any module.

Binding Natures with Potential and Flow

The disciplines that you declare can bind

- One nature with potential
- One nature with potential and a different nature with flow

© 2000-2015 All Rights Reserved.

- Nothing with either potential or flow

  A declaration of this latter form defines an *empty discipline*.

The following examples illustrate each of these forms.

The first example defines a single binding, one between potential and the nature `Voltage`. A discipline with a single binding is called a *signal-flow* discipline.

```
discipline voltage
    potential Voltage ; // A signal-flow discipline must be bound to potential.
enddiscipline
```

The next declaration, for the `electrical` discipline, defines two bindings. Such a declaration is called a *conservative discipline*.

```
discipline electrical
    potential Voltage ;
    flow Current ;
enddiscipline
```

When you define a conservative discipline, you must be sure that the nature bound to potential is different from the nature bound to flow.

The third declaration defines an empty discipline. If you do not explicitly specify a domain for an empty discipline, the domain is determined by the connectivity of the net.

```
discipline neutral
enddiscipline
```

```
discipline interconnect
    domain continuous
enddiscipline
```

In addition to declaring empty disciplines, you can also use a Verilog-AMS predefined empty discipline called `wire`.

Important

A `wire` in Verilog-AMS has no specified domain, so do not assume that it is digital.

Use an empty discipline when you want to let the components connected to a net determine which potential and flow natures are used for the net.

Binding Domains with Disciplines

The domain binding of a discipline indicates whether the signal value is an analog signal to be represented in continuous time or a digital signal to be represented in discrete time. The default domain is `continuous` for disciplines that are not empty. Signals in the continuous

© 2000-2015 All Rights Reserved.

domain always have real values. Signals in the discrete domain can have real, integer, or binary (0, 1, x, or z) values.

The following example illustrates how to define a discipline for an analog signal. Because the default value for domain is `continuous`, the domain line in this example could be omitted.

```
discipline electrical
    domain continuous ;
    potential Voltage ;
    flow Current ;
enddiscipline
```

The next example defines a discipline for a digital signal.

```
discipline logic
    domain discrete ;
enddiscipline
```

Disciplines and Domains of Wires and Undeclared Nets

Nets that do not have declared disciplines are evaluated as though they have empty disciplines. The effective domain of such nets is determined by how the nets are used.

- If the net is referenced in the digital context behavioral code or if its net type is other than `wire`, then the domain of the net is assumed to be `discrete`.
- If the net is bound only to ports and either has no declared net type or has a net type of `wire`, then the net has no domain binding.

© 2000-2015 All Rights Reserved.

Discipline Precedence

Disciplines can be declared in several ways and if more than one of these ways applies to a single net, discipline conflicts can arise. Verilog-AMS resolves conflicts with the following precedence.

Kind of Discipline Declaration	Precedence

A declaration from a module other than the module to which the net belongs using an out-of-module reference. For example,
`module example1 ;`
`  electrical example2.net ;`
`endmodule`
	Highest precedence

A local declaration of a net in the module to which it belongs. For example,
`module example2 ;`
`  electrical net ;`
`endmodule`	

`` `default_discipline `` used with qualifier only. `` `default_discipline logic trireg ; ``	
`` `default_discipline `` without qualifier or scope. `` `default_discipline logic ; ``	Lowest precedence

Compatibility of Disciplines

Certain operations in Verilog-AMS, such as declaring branches, are allowed only if the disciplines involved are compatible. Apply the following rules to determine whether any two disciplines are compatible.

- Any discipline is compatible with itself.
- An empty discipline is compatible with all disciplines.
- Disciplines with the `discrete` domain attribute and the same signal value type, such as `bit`, `real`, or `integer`, are compatible.
- Disciplines with different domain attributes are incompatible.
- Other kinds of continuous disciplines are compatible or not compatible, as determined by following paths through Figure 4-1 on page 78.

© 2000-2015 All Rights Reserved.

Figure 4-1 Analog Discipline Compatibility

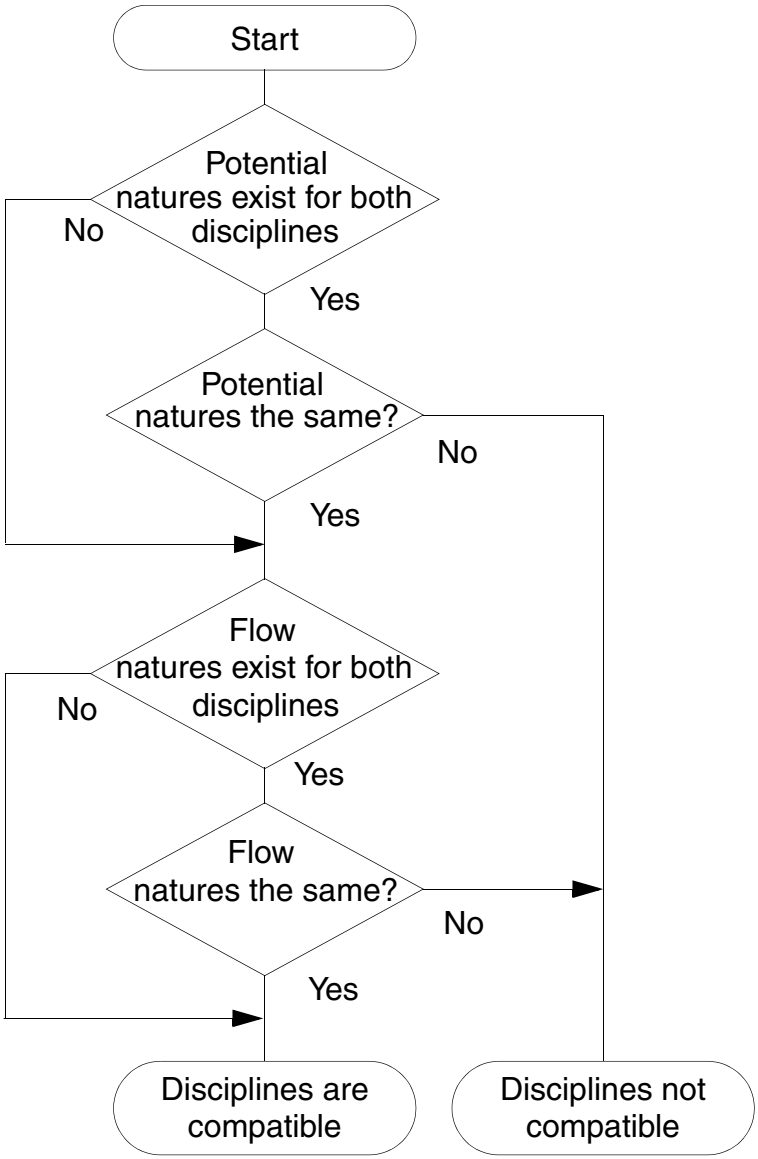

Consider the following declarations.

```
nature Voltage
    access = V ;
    units = "V" ;
    abstol = 1u ;
endnature

nature Current
    access = I ;
    units = "A" ;
```


© 2000-2015 All Rights Reserved.

```
    abstol = 1p ;
endnature

discipline emptydis
enddiscipline

discipline electrical
    potential Voltage ;
    flow Current ;
enddiscipline

discipline sig_flow_v
    potential Voltage ;
enddiscipline
```

To determine whether the `electrical` and `sig_flow_v` disciplines are compatible, follow through the discipline compatibility chart:

1. Both `electrical` and `sig_flow_v` have defined natures for potential. Take the *Yes* branch.
2. In fact, `electrical` and `sig_flow_v` have the same nature for potential. Take the *Yes* branch.
3. `electrical` has a defined nature for flow, but `sig_flow_v` does not. Take the *No* branch to the *Disciplines are compatible* end point.

Now add these declarations to the previous lists.

```
nature Position
    access = x ;
    units = "m" ;
    abstol = 1u ;
endnature

nature Force
    access = F ;
    units = "N" ;
    abstol = 1n ;
endnature

discipline mechanical
    potential Position ;
    flow force ;
enddiscipline
```

The `electrical` and `mechanical` disciplines are not compatible.

1. Both disciplines have defined natures for potential. Take the *Yes* branch.
2. The `Position` nature is not the same as the `Voltage` nature. Take the *No* branch to the *Disciplines not compatible* end point.

© 2000-2015 All Rights Reserved.

Net Disciplines

Use the net discipline declaration to associate nets and regs with previously defined disciplines.

```
net_discipline_declaration ::=
        discipline_identifier [range] list_of_nets ;
    |   wire [range] list_of_nets ;

range ::=
    [ msb_expr : lsb_expr ]

list_of_nets ::=
        net_type
    |   net_type , list_of_nets

msb_expr ::=
        constant_expr

lsb_expression ::=
        constant_expr

net_type ::=
        net_identifier [range] [= constant_expr | constant_array_expr]
```

The standard attribute for descriptions can be used with net discipline declarations. For example,

```
(* desc="drain terminal" *) electrical d;
```

Although the `desc` attribute is allowed, Cadence tools, in this release, do nothing with the information.

The initializers specified with the equals sign in the `net_type` can be used only when the *`discipline_identifier`* is a continuous discipline. The solver uses the initializer, if provided, as a nodeset value for the potential of the net. A null value in the *`constant_array_expr`* means that no nodeset value is being specified for that element of the bus. The initializers cannot include out-of-module references.

A net declared without a range is called a *scalar net*. A net declared with a range is called a *vector net*. In this release of Verilog-AMS, you cannot use parameters to define range limits.

```
magnetic inductor1, inductor2 ;         //Declares two scalar nets
electrical [1:10] node1 ;               //Declares a vector net
wire [3:0] connect1, connect2 ;         //Declares two vector nets
electrical [0:4] bus = {2.3,4.5,,6.0} ; //Declares vector net with nodeset values
```

The following example is illegal because a range, if defined, must be the first item after the discipline identifier and then applies to all of the listed net identifiers.

```
electrical AVDD, AVSS, BGAVSS, PD, SUB, [6:1] TRIM ;    // Illegal
```

Note: Cadence recommends that you specify the direction of a port before you specify the discipline. For example, in the following example the directions for `out` and `in` are specified before the `electrical` discipline declaration.

© 2000-2015 All Rights Reserved.

Consider the following declarations.

```
discipline emptydis
enddiscipline

module comp1 (out, in, unknown1, unknown2) ;
output out ;
input in ;
electrical out, in ;
emptydis unknown1 ;        // Declared with an empty discipline
analog
    V(out) <+ 2 * V(in)
endmodule
```

Module `comp1` has four ports: `out`, `in`, `unknown1`, and `unknown2`. The module declares `out` and `in` as `electrical` ports and uses them in the analog block. The port `unknown1` is declared with an `empty` discipline and cannot be used in the analog block because there is no way to access its signals. However, `unknown1` can be used in the list of ports, where it inherits natures from the ports of module instances that connect to it.

Because `unknown2` appears in the list of ports without being declared in the body of the module, Verilog-AMS implicitly declares `unknown2` as a scalar port with the default discipline. The default discipline type is `wire`, unless you use the `` `default_discipline `` compiler directive to specify a different discipline. (For more information, see "Setting a Default Discrete Discipline for Signals" on page 256.)

Now consider a different example.

```
module five_inputs( portbus );
input [0:5] portbus;
electrical [0:5] portbus;
real x;
analog begin
    generate i ( 0,4 )
        V(portbus[i]) <+ 0.0;
end
endmodule
```

The `five_inputs` module uses a port bus. Only one port name, `portbus`, appears in the list of ports but inside the module `portbus` is defined with a range.

Modules `comp1` and `five_inputs` illustrate the two ways you can use nets in a module.

- You can define the ports of a module by giving a list of nets on the module statement.
- You can describe the behavior of a module by declaring and using nets within the body of the module construct.

As you might expect, if you want to describe a conservative system, you must use conservative disciplines to define nets. If you want to describe a signal-flow or mixed signal-flow and conservative system, you can define nets with signal-flow disciplines.

© 2000-2015 All Rights Reserved.

As a result of port connections of analog nets, a single node can be bound to a number of nets of different disciplines.

Current contributions to a node that is bound only to disciplines that have only potential natures, are illegal. The potential of such a node is the sum of all potential contributions, but flow for such a node is not defined.

Nets of signal flow disciplines in modules must not be bound to inout ports and you must not contribute potential to input ports.

To access the `abstol` associated with a nets's potential or flow natures, use the form

net`.potential.abstol`

or

net`.flow.abstol`

For an example, see "Cross Event" on page 119.

Ground Nodes

Use the ground declaration to declare global reference nodes.

```
ground_declaration ::=
        ground list_of_nets ;
```

You use the ground declaration to specify an already declared net of continuous discipline. The node associated with that net then becomes the global reference node in the circuit. If used in behavioral code, the net must be used in only the differential source and probe forms. This requirement means that a form like `V(gnd)` is illegal but a form like `V(in, gnd)` is legal.

For example,

```
module loadedsrc(out);
output out;
electrical out;
electrical gnd;    // Declare a net of continuous discipline.
ground gnd;        // Declare the ground.
parameter real srcval = 5.0;
resistor #(.r(10K)) r1(out,gnd);
analog begin
    V(out) <+ V(in,gnd)*2;  // Probe the voltage difference
                            // between in and gnd.
end
endmodule
```


© 2000-2015 All Rights Reserved.

Real Nets

Use the real net declaration to declare a data type that represents a real-valued physical connection between structural entities.

```
real_net_declaration ::=
        wreal list_of_nets ;
```

In the following example, the real variable, `stim`, connects to the `wreal` net, `in`:

```
module foo(in, out);
input in;
output out;
wreal in;  // Declares in as a wreal net.
electrical out;
analog begin
    V(out) <+ in;
end
endmodule

module top();
real stim;  // Declares stim as a real variable.
wreal wr_stim;
assign wr_stim = stim;
electrical load;
foo f1(wr_stim, load);  // Connects stim to in.
always begin
    #1 stim = stim + 0.1;
end
endmodule // top
```

See also the following topics:

- Arrays of Real Nets on page 84
- Real Nets with More than One Driver on page 84

© 2000-2015 All Rights Reserved.

Arrays of Real Nets

To declare an array of real nets, specify the upper and lower indexes of the range. Be sure that each index is a constant expression that evaluates to an integer value. For example:

```
wreal w[3:2]; // Declares w as a wreal array.
```

The software supports full usage of part-selects of `wreal` arrays, including part-selects which refer to only a part of the full array.

Real Nets with More than One Driver

The Cadence implementation of the Verilog-AMS language supports more than one driver on a `wreal` net and the following states for `wreal` values:

State	Description
`wrealZState`	High-impedance state equivalent to the `hiZ` discrete logic state
`wrealXState`	Unknown state equivalent to the `X` state in discrete logic **Note:** The software sets the value of a `wreal` net to this state (`wrealXState`) if it cannot determine the resolved value of the net.

Note: Any `wreal` net that has no driver has a value of 0.0.

These state values are global values such that you can reference them in your Verilog-AMS code. For example:

```
module foo(x);
    inout x;
    wreal x;
    integer error_cnt;
    real result;

    initial error_cnt = 0;
    always @(x)
    begin
        if(x === `wrealZState)
            result = 1.234;
        if(x === `wrealXState)
            error_cnt = error_cnt + 1;
    end
    assign x = result;
endmodule
```

Here is another example comparing a real value (`aout`) to `` `wrealZState ``:

© 2000-2015 All Rights Reserved.

```
module dac (out, in, clk);
  parameter integer bits = 8 from [1:24]; // resolution (bits)
  parameter real fullscale = 1.0;      // output range is from 0 to fullscale (V)


  output out;
  wreal out;
  input [0:bits-1] in;
  input clk;
  logic in, clk;

  real result, aout;

  real bitvalue;
  integer i;

  always @(posedge clk) begin
    bitvalue = fullscale;
    // aout = 0.0;
    aout = `wrealZState;
    for (i=bits-1; i>=0; i=i-1) begin
      bitvalue = bitvalue / 2;
      if (in[i])
        if (aout === `wrealZState)     <--- this line
            aout = bitvalue;
        else
            aout = aout + bitvalue;
    end
    result = aout;
  end

  assign out = result;

endmodule
```

Note: You cannot redefine the values of these state values.

The program uses these the `wrealZState` and `wrealXState` state values to determine the resolved value of a `wreal` net with more than one driver. You can use the `-wreal_resolution` command-line option to select the `wreal` resolution function you want to use. If you do not use the `-wreal_resolution` command-line option to specify a resolution function, or if you specify `-wreal_resolution default`, the program uses the default resolution algorithm, which is as follows:

Conditions	Resolution
All drivers are driving `wrealZState`	Drive the receivers using `wrealZState`
Exactly one driver is not driving `wrealZState`	Drive the receivers using the only non-`wrealZState` value
More than one driver is not driving `wrealZState`	Drive the receivers using `wrealXState` and issue a runtime error message

© 2000-2015 All Rights Reserved.

Conditions	Resolution
Any driver is driving `wrealXState`	Drive the receivers using `wrealXState`

See “Selecting a wreal Resolution Function” in the *Virtuoso® AMS Designer Simulator User Guide* for other resolution functions you can specify.

See also the following topics in the *Virtuoso AMS Designer Simulator User Guide*:

- “Connecting VHDL and VHDL-AMS Blocks to Verilog and Verilog-AMS Blocks”
- “Connecting Verilog-AMS wreal Signals to Analog Signals“
- “Resolving Disciplines for Verilog-AMS wreal Nets“
- “Using wreal Nets at Mixed-Language Boundaries“

Named Branches

Use the branch declaration to declare a path between two nets of continuous discipline. Cadence recommends that you use named branches, especially when debugging with Tcl commands because, for example, it is easier to type `value branch1` than it is to type `value \vect1[5] vec2[1]` and then compute the difference between the returned value.

```
branch_declaration ::=
        branch list_of_branches ;

list_of_branches ::=
        terminals list_of_branch_identifiers

terminals ::=
        ( scalar_net_identifier )
    |   ( scalar_net_identifier , scalar_net_identifier )

list_of_branch_identifiers ::=
        branch_identifier
    |   branch_identifier , list_of_branch_identifiers
```

`scalar_net_identifier` must be either a scalar net or a single element of a vector net.

You can declare branches only in a module. You must not combine explicit and implicit branch declarations for a single branch. For more information, see “Implicit Branches” on page 87.

The scalar nets that the branch declaration associates with a branch are called the *branch terminals*. If you specify only one net, Verilog-AMS assumes that the other is ground. The branch terminals must have compatible disciplines. For more information, see “Compatibility of Disciplines” on page 77.

Consider the following declarations.

© 2000-2015 All Rights Reserved.

```
voltage [5:0] vec1 ;        // Declares a vector net
voltage [1:6] vec2 ;        // Declares a vector net
voltage sca1 ;              // Declares a scalar net
voltage sca2 ;              // Declares a scalar net
branch (vec1[5],vec2[1]) branch1, (sca1,sca2) branch2 ;
```

`branch1` is legally declared because each branch terminal is a single element of a vector net. The second branch, `branch2`, is also legally declared because nodes `sca1` and `sca2` are both scalar nets.

Implicit Branches

As Cadence recommends, you can refer to a named branch with only a single identifier. Alternatively, you might find it more convenient or clearer to refer to branches by their branch terminals. Most of the examples in this reference, including the following example, use this form of implicit branch declaration. You must not, however, combine named and implicit branch declarations for a single branch.

```
module diode (a, c) ;
inout a, c ;
electrical a, c ;
parameter real rs=0, is=1e-14, tf=0, cjo=0, phi=0.7 ;
parameter real kf=0, af=1, ef=1 ;

analog begin
    I(a, c) <+ is*(limexp((V(a, c)-rs*I(a, a))/$vt) - 1);
    I(a, c) <+ white_noise(2* `P_Q * I(a, c)) ;
    I(a, c) <+ flicker_noise(kf*pow(abs(I(a, c)),af),ef);
end
endmodule
```

The previous example using implicit branches is equivalent to the following example using named branches.

```
module diode (a, c) ;
inout a, c ;
electrical a, c ;
branch (a,c) diode, (a,a) anode ; // Declare named branches
parameter real rs=0, is=1e-14, tf=0, cjo=0, phi=0.7 ;
parameter real kf=0, af=1, ef=1 ;

analog begin
    I(diode) <+ is*(limexp((V(diode)-rs*I(anode))/$vt) - 1);
    I(diode) <+ white_noise(2* `P_Q * I(diode)) ;
    I(diode) <+ flicker_noise(kf*pow(abs(I(diode)),af),ef);
end
endmodule
```


© 2000-2015 All Rights Reserved.

© 2000-2015 All Rights Reserved.

5

Statements for the Analog Block

This chapter describes the assignment statements and the procedural control constructs and statements that the Cadence® Verilog®-AMS language supports within the analog block. For information, see the indicated locations. The constructs and statements discussed include

- Procedural Assignment Statements in the Analog Block on page 90
- Branch Contribution Statement on page 90
- Indirect Branch Assignment Statement on page 92
- Sequential Block Statement on page 93
- Conditional Statement on page 94
- Case Statement on page 94
- Loop statements, including
  - Repeat Statement on page 95
  - While Statement on page 96
  - For Statement on page 96
- Generate Statement on page 97

Verilog-AMS also supports statements for use in digital contexts. For more information, see the “Assignments” and “Behavioral Modeling” chapters, in the *Verilog-XL Reference*.

Assignment Statements

There are several kinds of assignment statements in Verilog-AMS: the procedural assignment statement, the branch contribution statement, and the indirect branch assignment statement are available for analog modeling. You use the procedural assignment statement to modify integer and real variables and you use the branch contribution and indirect branch assignment statements to modify branch values such as potential and flow.

© 2000-2015 All Rights Reserved.

In addition, Verilog-AMS supports the continuous assignment statement and the procedural assignment statement for digital modeling. Continuous assignment statements can be used only outside of the initial, always, and analog blocks. For more information on these statements, see the “Assignments” chapter, in the *Verilog-XL Reference*.

Procedural Assignment Statements in the Analog Block

Use the procedural assignment statement to modify integer and real variables.

```
procedural_assignment ::=
        lexpr = expression ;

lexpr ::=
        integer_identifier
    |   real_identifier
    |   array_element

array_element ::=
        integer_identifier [ constant_expression ]
    |   real_identifier [ constant_expression ]
```

The left-hand operand of the procedural assignment used in analog blocks must be a modifiable integer or real variable or an element of an integer or real array. The type of the left-hand operand determines the type of the assignment.

The right-hand operand can be any arbitrary scalar expression constituted from legal operands and operators.

In the following code fragment, the variable `phase` is assigned a real value. The value must be real because `phase` is defined as a real variable.

```
real phase ;
analog begin
    phase = idt( gain*V(in) ) ;
```

You can also use procedural assignment statements to modify array values. For example, if `r` is declared as

```
real r[0:3], sum ;
```

you can make assignments such as

```
r[0] = 10.1 ;
r[1] = 11.1 ;
r[2] = 12.1 ;
r[3] = 13.1 ;
sum = r[0] + r[1] + r[2] + r[3] ;
```

Branch Contribution Statement

Use the branch contribution statement to modify signal values.

© 2000-2015 All Rights Reserved.

```
branch_contribution ::=
        bvalue <+ expression ;

bvalue ::=
        access_identifier ( analog_signal_list )

analog_signal_list ::=
        branch_identifier
    |   node_or_port_identifier
    |   node_or_port_identifier , node_or_port_identifier
```

`bvalue` specifies a source branch signal. `bvalue` must consist of an access function applied to a branch. *`expression`* can be linear, nonlinear, or dynamic.

Branch contribution statements must be placed within the analog block.

As discussed in the following list, the branch contribution statement differs in important ways from the procedural assignment statement.

- You can use the procedural assignment statement only for variables, whereas you can use the branch contribution statement only for access functions.
- Using the procedural assignment statement to assign a number to a variable overrides the number previously contained in that variable. Using the branch contribution statement, however, adds to any previous contribution. (Contributions to flow can be viewed as adding new flow sources in parallel with previous flow sources. Contributions to value can be viewed as adding new value sources in series with previous value sources.)

Evaluation of a Branch Contribution Statement

For source branch contributions, the simulator evaluates the branch contribution statement as follows:

1. The simulator evaluates the right-hand operand.
2. The simulator adds the value of the right-hand operand to any previously retained value for the branch.
3. At the end of the evaluation of the analog block, the simulator assigns the summed value to the source branch.

For example, given a pair of nodes declared with the `electrical` discipline, the code fragment

```
V(n1, n2) <+ expr1 ;
V(n1, n2) <+ expr2 ;
```

is equivalent to

```
V(n1, n2) <+ expr1 + expr2 ;
```


© 2000-2015 All Rights Reserved.

Creating a Switch Branch

Important

When you contribute a flow to a branch that already has a value retained for potential, the simulator discards the value for potential and converts the branch to a flow source. Conversely, when you contribute a potential to a branch that already has a value retained for flow, the simulator discards the value for flow and converts the branch to a potential source. Branches converted from flow sources to potential sources, and vice versa, are known as *switch branches*. For additional information, see "Switch Branches" on page 271.

Indirect Branch Assignment Statement

Use the indirect branch assignment statement when it is difficult to separate the target from the equation.

```
indirect_branch_assignment ::=
        target : equation ;

target ::=
        bvalue

equation ::=
        nexpr == expression

nexpr ::=
        bvalue
    |   ddt ( bvalue )
    |   idt ( bvalue )
    |   idtmod ( bvalue )
```

An indirect branch assignment has this format:

```
V(out) : V(in) == 0 ;
```

Read this as "find `V(out)` such that `V(in)` is zero." This example says that `out` should be driven with a voltage source and the voltage should be such that the given equation is satisfied. Any branches referenced in the equation are only probed and not driven, so in this example, `V(in)` acts as a voltage probe.

Indirect branch assignments can be used only within the analog block.

The next example models an ideal operational amplifier with infinite gain. The indirect assignment statement says "find `V(out)` such that `V(pin, nin)` is zero."

```
module opamp (out, pin, nin) ;
output out ;
input pin, nin ;
voltage out, pin, nin ;
analog
```


© 2000-2015 All Rights Reserved.

```
    V(out) : V(pin, nin) == 0 ; // Indirect assignment
endmodule
```

Indirect assignments are incompatible with assignments made with the branch contribution statement. If you indirectly assign a value to a branch, you cannot then contribute to the branch by using the branch contribution statement.

Sequential Block Statement

Use a sequential block when you want to group two or more statements together so that they act like a single statement.

```
seq_block ::=
        begin [ : block_identifier { block_item_declaration } ]
            { statement }
        end

block_item_declaration ::=
        parameter_declaration
        integer_declaration
    |   real_declaration
```

For information on `statement`, see "Defining Module Analog Behavior" on page 42.

The statements included in a sequential block run sequentially.

If you add a block identifier, you can also declare local variables for use within the block. All the local variables you declare are static. In other words, a unique location exists for each local variable, and entering or leaving the block does not affect the value of a local variable.

The following code fragment uses two named blocks, declaring a local variable in each of them. Although the variables have the same name, the simulator handles them separately because each variable is local to its own block.

```
integer j ;
...
    for ( j = 0 ; j < 10 ; j=j+1 ) begin
        if ( j%2 ) begin : odd
            integer j ; // Declares a local variable
            j = j+1 ;
            $display ("Odd numbers counted so far = %d" , j ) ;
        end else begin : even
            integer j ; // Declares a local variable
            j = j+1 ;
            $display ("Even numbers counted so far = %d" , j ) ;
        end
    end
```

Each named block defines a new scope. For additional information, see "Scope Rules" on page 51.

© 2000-2015 All Rights Reserved.

Conditional Statement

Use the conditional statement to run a statement under the control of specified conditions.

```
conditional_statement ::=
        if ( expression ) statement1
        [ else statement2 ]
```

If *expression* evaluates to a nonzero number (true), the simulator executes *statement1*. If *expression* evaluates to zero (false) and the `else` statement is present, the simulator skips *statement1* and executes *statement2*.

If *expression* consists entirely of genvar expressions, literal numerical constants, parameters, or the analysis function, *statement1* and *statement2* can include analog operators.

The simulator always matches an `else` statement with the closest previous `if` that lacks an `else`. In the following code fragment, for example, the first `else` goes with the inner `if`, as shown by the indentation.

```
if (index > 0)
    if (i > j) // The next else belongs to this if
        result = i ;
    else // This else belongs to the previous if
        result = j ;
else $strobe ("Index < 0"); // This else belongs to the first if
```

The following code fragment illustrates a particularly useful form of the `if-else` construct.

```
if ((value > 0)&&(value <= 1)) $strobe("Category A");
else if ((value > 1)&&(value <= 2)) $strobe("Category B");
else if ((value > 2)&&(value <= 3)) $strobe("Category C");
else if ((value > 3)&&(value <= 4)) $strobe("Category D");
else $strobe("Illegal value");
```

The simulator evaluates the expressions in order. If any one of them is true, the simulator runs the associated statement and ends the whole chain. The last `else` statement handles the default case, running if none of the other expressions is true.

Case Statement

Use the `case` construct to control which one of a series of statements runs.

```
case_statement ::=
        case ( expression ) case_item { case_item } endcase

case_item ::=
        test_expression { , test_expression } : statement
    |   default [ : ] statement
```


© 2000-2015 All Rights Reserved.

The `default` statement is optional. Using more than one `default` statement in a case construct is illegal.

The simulator evaluates each *`test_expression`* in turn and compares it with *`expression`*. If there is a match, the statement associated with the matching *`test_expression`* runs. If none of the expressions in *`text_expression`* matches *`expression`* and if you coded a default `case_item`, the `default` statement runs. If all comparisons fail and you did not code a default `case_item`, none of the associated statements runs.

If *`expression`* and *`text_expression`* are genvar expressions, parameters, or the analysis function, *`statement`* can include analog operators; otherwise, *`statement`* cannot include analog operators.

The following code fragment determines what range `value` is in. For example, if `value` is 1.5 the first comparison fails. The second *`test_expression`* evaluates to 1 (true), which matches the case expression, so the `$strobe("Category B")` statement runs.

```
real value ;
...
    case (1)
        ((value > 0)&&(value <= 1)) : $strobe("Category A");
        ((value > 1)&&(value <= 2)) : $strobe("Category B");
        ((value > 2)&&(value <= 3)) : $strobe("Category C");
        ((value > 3)&&(value <= 4)) : $strobe("Category D");
        value <= 0 , value >= 4 : $strobe("Out of range");
        default $strobe("Error. Should never get here.");
    endcase
```

Repeat Statement

Use the `repeat` statement when you want a statement to run a fixed number of times.

```
repeat_statement ::=
        repeat ( constant_expression ) statement
```

`statement` must not include any analog operators. For additional information, see "Analog Operators" on page 164.

The following example code repeats the loop exactly 10 times while summing the first 10 digits.

```
integer i, total ;
...
    i = 0 ;
    total = 0 ;
    repeat (10) begin
        i = i + 1 ;
        total = total + i ;
    end
```


© 2000-2015 All Rights Reserved.

While Statement

Use the `while` statement when you want to be able to leave a loop when an expression is no longer valid.

```
while_statement ::=
        while ( expression ) statement
```

The `while` loop evaluates *`expression`* at each entry into the loop. If *`expression`* is nonzero (true), *`statement`* runs. If *`expression`* starts out as zero (false), *`statement`* never runs.

`statement` must not include any analog operators. For additional information, see "Analog Operators" on page 164.

The following code fragment counts the number of random numbers generated before `rand` becomes zero.

```
integer rand, count ;
...
    rand = abs($random % 10) ;
    count = 0 ;
    while (rand) begin
        count = count + 1 ;
        rand = abs($random % 10) ;
    end ;
    $strobe ("Count is %d", count) ;
```

For Statement

Use the `for` statement when you want a statement to run a fixed number of times.

```
for_statement ::=
        for ( initial_assignment ; expression ;
                step_assignment ) statement
```

If *`initial_assignment`*, *`expression`*, and *`step_assignment`* are genvar expressions, the statement can include analog operators; otherwise, the *`statement`* must not include any analog operators. For additional information, see "Analog Operators" on page 164.

Use *`initial_assignment`* to initialize an integer loop control variable that controls the number of times the loop executes. The simulator evaluates *`expression`* at each entry into the loop. If *`expression`* evaluates to zero, the loop terminates. If *`expression`* evaluates to a nonzero value, the simulator first runs *`statement`* and then runs *`step_assignment`*. *`step_assignment`* is usually defined so that it modifies the loop control variable before the simulator evaluates *`expression`* again.

© 2000-2015 All Rights Reserved.

For example, to sum the first 10 even numbers, the `repeat` loop given earlier could be rewritten as a `for` loop.

```
integer j, total ;
...
    total = 0 ;
    for ( j = 2; j < 22; j = j + 2 )
        total = total + j ;
```

Generate Statement

Note: The `generate` statement is obsolete. To comply with current practice, use the `genvar` statement instead.

The `generate` statement is a looping construct that is unrolled at compile time. Use the `generate` statement to simplify your code or when you have a looping construct that contains analog operators. The `generate` statement can be used only within the analog block. The generate statement is supported only for backward compatibility.

```
generate_statement ::=
        generate index_identifier ( start_expr ,
        end_expr [ , incr_expr ] ) statement

start_expr ::=
        constant_expression

end_expr ::=
        constant_expression

incr_expr ::=
        constant_expression
```

`index_identifier` is an identifier used in *`statement`*. When *`statement`* is unrolled, each occurrence of *`index_identifier`* found in *`statement`* is replaced by a constant. You must be certain that nothing inside *`statement`* modifies the index.

In the first unrolled instance of *`statement`*, the compiler replaces each occurrence of *`index_identifier`* by the value `start_expr`. In the second instance, the compiler replaces each *`index_identifier`* by the value `start_expr` plus `incr_expr`. In the third instance, the compiler replaces each *`index_identifier`* by the value `start_expr` plus twice the `incr_expr`. This process continues until the replacement value is greater than the value of `end_expr`.

If you do not specify `incr_expr`, it takes the value +1 if `end_expr` is greater than `start_expr`. If `end_expr` is less than `start_expr`, `incr_expr` takes the value -1 by default.

© 2000-2015 All Rights Reserved.

The values of the `start_expr`, `end_expr`, and `incr_expr` determine how the `generate` statement behaves.

If	And	Then the generate statement
`start_expr` > `end_expr`	`incr_expr` > 0	does not execute
`start_expr` < `end_expr`	`incr_expr` < 0	does not execute
`start_expr` = `end_expr`		executes once

As an example of using the `generate` statement, consider the following module, which implements an analog-to-digital converter.

```
`define BITS 4

module adc (in, out) ;
input in ;
output [0:`BITS - 1] out ;
electrical in ;
electrical [0:`BITS - 1] out ;
parameter fullscale = 1.0, tdelay = 0.0, trantime = 10n ;
real samp, half ;

analog begin
    half = fullscale/2.0 ;
    samp = V(in) ;
    generate i (`BITS - 1,0) begin    // default increment = -1
        V(out[i]) <+ transition(samp > half, tdelay, trantime);
        if (samp > half) samp = samp - half ;
        samp = 2.0 * samp ;
    end
end
endmodule
```

Module `adc` is equivalent to the following module coded without using the `generate` statement.

```
`define BITS 4

module adc_unrolled (in, out) ;
input in ;
output [0:`BITS - 1] out ;
electrical in;
electrical [0:`BITS - 1] out ;
parameter fullscale = 1.0, tdelay = 0.0, trantime = 10n ;
real samp, half ;

analog begin
    half = fullscale/2.0 ;
    samp = V(in) ;
    V(out[3]) <+ transition(samp > half, tdelay, trantime);
    if (samp > half) samp = samp - half ;
    samp = 2.0 * samp ;
    V(out[2]) <+ transition(samp > half, tdelay, trantime);
    if (samp > half) samp = samp - half ;
```


© 2000-2015 All Rights Reserved.

```
    samp = 2.0 * samp ;
    V(out[1]) <+ transition(samp > half, tdelay, trantime);
    if (samp > half) samp = samp - half ;
    samp = 2.0 * samp ;
    V(out[0]) <+ transition(samp > half, tdelay, trantime);
    if (samp > half) samp = samp - half ;
    samp = 2.0 * samp ;
end
endmodule
```

Note: Because the `generate` statement is unrolled at compile time, you cannot use the SimVision debugging tool to examine the value of *`index_identifier`* or to evaluate expressions that contain *`index_identifier`*. For example, if *`index_identifier`* is `i`, you cannot use a debugging command like `print i` nor can you use a command like `print{a[i]}`.

© 2000-2015 All Rights Reserved.

© 2000-2015 All Rights Reserved.

6

Operators for Analog Blocks

This chapter describes the operators that you can use in analog blocks and explains how to use them to form expressions. For basic definitions, see

- Unary Operators on page 103
- Binary Operators on page 105
- Bitwise Operators on page 108
- Ternary Operator on page 109

For information about precedence and short-circuiting, see

- Operator Precedence on page 110
- Expression Short-Circuiting on page 110

Verilog-AMS also supports additional operators for use in digital contexts. For more information, see the “Expressions” chapter, in the *Verilog-XL Reference*.

© 2000-2015 All Rights Reserved.

Overview of Operators

An *expression* is a construct that combines operands with operators to produce a result that is a function of the values of the operands and the semantic meaning of the operators. Any legal operand is also an expression. You can use an expression anywhere Verilog-AMS requires a value.

A *constant expression* is an expression whose operands are constant numbers and previously defined parameters and whose operators all come from among the unary, binary, and ternary operators described in this chapter.

All of the operators (except `==`, `!=`, `===`, and `!==`), functions, and statements used in continuous contexts report an error if the expressions they operate on contain `x` or `z` bits.

The operators listed below, with the single exception of the conditional operator, associate from left to right. That means that when operators have the same precedence, the one farthest to the left is evaluated first. In this example

```
A + B - C
```

the simulator does the addition before it does the subtraction.

When operators have different precedence, the operator with the highest precedence (the smallest precedence number) is evaluated first. In this example

```
A + B / C
```

the division (which has a precedence of 2) is evaluated before the addition (which has a precedence of 3). For information on precedence, see "Operator Precedence" on page 110.

You can change the order of evaluation with parentheses. If you code

```
(A + B) / C
```

the addition is evaluated before the division.

The operators divide into three groups, according to the number of operands the operator requires. The groups are the unary operators, the binary operators, and the ternary operator.

© 2000-2015 All Rights Reserved.

Unary Operators

The unary operators each require a single operand. The unary operators have the highest precedence of all the operators discussed in this chapter.

Unary Operators

Operator	Precedence	Definition	Type of Operands Allowed	Example or Further Information

+	1	Unary plus	Integer, real	`I = +13;  // I = 13`
				`I = +(-13);  // I = -13`

–	1	Unary minus	Integer, real	`R = -13.1;  // R = -13.1`
				`I = -(4-5);  // I = 1`

!	1	Logical negation	Integer, real	`I = !(1==1);  // I = 0`
				`I = !(1==2);  // I = 1`
				`I = !13.2;  // I = 0`
				`/*Result is zero for a non-zero operand*/`

~	1	Bitwise unary negation	Integer	See the Bitwise Unary Negation Operator figure on page 109.
&	1	Unary reduction AND	integer	See "Unary Reduction Operators."
~&	1	Unary reduction NAND	integer	See "Unary Reduction Operators."
|	1	Unary reduction OR	integer	See "Unary Reduction Operators."
~|	1	Unary reduction NOR	integer	See "Unary Reduction Operators."
^	1	Unary reduction exclusive OR	integer	See "Unary Reduction Operators."
^~ or ~^	1	Unary reduction exclusive NOR	integer	See "Unary Reduction Operators."

Unary Reduction Operators

The unary reduction operators perform bitwise operations on single operands and produce a single bit result. The reduction `AND`, reduction `OR`, and reduction `XOR` operators first apply the following logic tables between the first and second bits of the operand to calculate a result.

© 2000-2015 All Rights Reserved.

Then for the second and subsequent steps, these operators apply the same logic table to the previous result and the next bit of the operand, continuing until there is a single bit result.

The reduction `NAND`, reduction `NOR`, and reduction `XNOR` operators are calculated in the same way, except that the result is inverted.

Reduction operators can be used in the `initial` and `always` blocks of modules but are not supported in the `analog` block of Verilog-AMS modules.

Unary Reduction AND Operator

&	**0**	**1**
0	0	0
1	0	1

Unary Reduction OR Operator

|	**0**	**1**
0	0	1
1	1	1

Unary Reduction Exclusive OR Operator

^	**0**	**1**
0	0	1
1	1	0

© 2000-2015 All Rights Reserved.

Binary Operators

The binary operators each require two operands.

Binary Operators

Operator	Precedence	Definition	Type of Operands Allowed	Example or Further Information
+	3	*a* plus *b*	Integer, real	`R = 10.0 + 3.1; // R = 13.1`
-	3	*a* minus *b*	Integer, real	`I = 10 - 13; // I = -3`
*	2	*a* multiplied by *b*	Integer, real	`R = 2.2 * 2.0; // R = 4.4`

/	2	*a* divided by *b*	Integer, real	`I = 9 / 4; // I = 2`
				`R = 9.0 / 4; // R = 2.25`

%	2	*a* modulo *b*	Integer, real	`I = 10 % 5; // I = 0`
				`I = -12 % 5; // I = -2`
				`R = 10 % 3.75 // R = 2.5`
				`/*The result takes sign of the first operand.*/`

<	5	*a* less than *b*; evaluates to 0 or 1	Integer, real	`I = 5 < 7; // I = 1`
				`I = 7 < 5; // I = 0`

>	5	*a* greater than *b*; evaluates to 0 or 1	Integer, real	`I = 5 > 7; // I = 0`
				`I = 7 > 5; // I = 1`

<=	5	*a* less than or equal to *b*; evaluates to 0 or 1	Integer, real	`I = 5.0 <= 7.5; // I = 1`
				`I = 5.0 <= 5.0; // I = 1`
				`I = 5 <= 4; // I = 0`

>=	5	*a* greater than or equal to *b*; evaluates to 0 or 1	Integer, real	`I = 5.0 >= 7; // I = 0`
				`I = 5.0 >= 5; // I = 1`
				`I = 5.0 >= 4.8; // I = 1`

==	6	*a* equal to *b*; evaluates to 0, 1, or `x` (if any bit of *a* or *b* is `x` or `z`).	Integer, real	`I = 5.2 == 5.2; // I = 1`
				`I = 5.2 == 5.0; // I = 0`
				`I = 1 == 1'bx; // I = x`

© 2000-2015
All Rights Reserved.

Binary Operators, *continued*

Operator	Precedence	Definition	Type of Operands Allowed	Example or Further Information

`!=`	6	*a* not equal to *b*; evaluates to 0, 1, or `x` (if any bit of *a* or *b* is `x` or `z`).	Integer, real	`I = 5.2 != 5.2; // I = 0`
				`I = 5.2 != 5.0; // I = 1`

`===`	6	case equality; `x` and `z` bits included; evaluates to 0 or 1	integer	`I = 1 === 1'bx; // I = 0`
`!==`	6	case inequality; `X` and `Z bits` included; evaluates to 0 or 1	integer	`I = 1 !== 1'bx; // I = 1`

`&&`	10	Logical AND; evaluates to 0 or 1	Integer, real	`I = (1==1)&&(2==2);  // I = 1`
				`I = (1==2)&&(2==2);  // I = 0`
				`I = -13 && 1;  // I = 1`

`||`	11	Logical OR; evaluates to 0 or 1	Integer, real	`I = (1==2)||(2==2);  // I = 1`
				`I = (1==2)||(2==3);  // I = 0`
				`I = 13 || 0;  // I = 1`

`&`	7	Bitwise binary AND	Integer	See the Bitwise Binary AND Operator figure on page 108.
`|`	9	Bitwise binary OR	Integer	See the Bitwise Binary OR Operator figure on page 108.
`^`	8	Bitwise binary exclusive OR	Integer	See the Bitwise Binary Exclusive OR Operator figure on page 108.
`^~`	8	Bitwise binary exclusive NOR (Same as `~^`)	Integer	See the Bitwise Binary Exclusive NOR Operator figure on page 108.
`~^`	8	Bitwise binary exclusive NOR (Same as `^~`)	Integer	See the Bitwise Binary Exclusive NOR Operator figure on page 108.

© 2000-2015
All Rights Reserved.

Binary Operators, *continued*

Operator	Precedence	Definition	Type of Operands Allowed	Example or Further Information

`<<`	4	*a* shifted *b* bits left	Integer	`I = 1 << 2;  // I = 4`
				`I = 2 << 2;  // I = 8`
				`I = 4 << 2;  // I = 16`

`>>`	4	*a* shifted *b* bits right	Integer	`I = 4 >> 2;  // I = 1`
				`I = 2 >> 2;  // I = 0`

`or`	11	Event OR	Event expression	`@(initial_step or cross(V(vin)-1))`

© 2000-2015
All Rights Reserved.

Bitwise Operators

The bitwise operators evaluate to integer values. Each operator combines a bit in one operand with the corresponding bit in the other operand to calculate a result according to these logic tables.

Bitwise Binary AND Operator

&	**0**	**1**
0	0	0
1	0	1

Bitwise Binary OR Operator

|	**0**	**1**
0	0	1
1	1	1

Bitwise Binary Exclusive OR Operator

^	**0**	**1**
0	0	1
1	1	0

Bitwise Binary Exclusive NOR Operator

^~ or ~^	**0**	**1**
0	1	0
1	0	1

© 2000-2015 All Rights Reserved.

Bitwise Unary Negation Operator

~	
0	1
1	0

Ternary Operator

There is only one ternary operator, the conditional operator. The conditional operator has the lowest precedence of all the operators listed in this chapter.

Conditional Operator

Operator	Precedence	Definition	Type of Operands Allowed	Example or Further Information

?:	12	*exp* ? *t_exp* : *f_exp*	Valid expressions	`I= 2==3 ? 1:0;  // I = 0`
				`R= 1==1 ? 1.0:0.0; // R=1.0`

A complete conditional operator expression looks like this:

conditional_expr **?** *true_expr* **:** *false_expr*

If *conditional_expr* is true, the conditional operator evaluates to *true_expr*, otherwise to *false_expr*.

The conditional operator is right associative.

This operator performs the same function as the `if-else` construct. For example, the contribution statement

```
V(out) <+ V(in) > 2.5 ? 0.0 : 5.0 ;
```

is equivalent to

```
If (V(in) > 2.5)
    V(out) <+ 0.0 ;
else
    V(out) <+ 5.0 ;
```


© 2000-2015 All Rights Reserved.

Operator Precedence

The following table summarizes the precedence information for the unary, binary, and ternary operators. Operators at the top of the table have higher precedence than operators lower in the table.

Precedence	Operators	
1	+ - ! ~ (unary)	Highest precedence
2	* / %	
3	+ - (binary)	
4	<< >>	
5	< <= > >=	
6	== != === !==	
7	&	
8	^ ~^ ^~	
9	|	
10	&&	
11	||	
12	?: (conditional operator)	Lowest precedence

Expression Short-Circuiting

Sometimes the simulator can determine the value of an expression containing logical AND (`&&`), logical OR (`||`), or bitwise AND (`&`) without evaluating the entire expression. By taking advantage of such expressions, the simulator operates more efficiently.

```
integer varInt;
real varReal;

@(initial_step)
    begin
        varInt = 123;
        varReal = 7.890121212e2;
    end
```

For this example, `retString` receives the value `"Use Integer 123, string 456 and real 789.0 to create a string 123456789.0!"`

© 2000-2015 All Rights Reserved.

7

Built-In Mathematical Functions

This chapter describes the mathematical functions provided by the Cadence® Verilog®-AMS language. These functions include

- Standard Mathematical Functions on page 112
- Trigonometric and Hyperbolic Functions on page 112
- Controlling How Math Domain Errors Are Handled on page 113

Because the simulator uses differentiation to evaluate expressions, Cadence recommends that you use only mathematical expressions that are continuously differentiable. To prevent run-time domain errors, make sure that each argument is within a function's domain.

© 2000-2015 All Rights Reserved.

Standard Mathematical Functions

These are the standard mathematical functions supported by Verilog-AMS. The operands must be integers or real numbers.

Function	Description	Domain	Returned Value
`abs(x)`	Absolute	All x	Integer, if x is integer; otherwise, real
`ceil(x)`	Smallest integer larger than or equal to x	All x	Integer
`exp(x)`	Exponential. See also "Limited Exponential Function" on page 165.		Real
`floor(x)`	Largest integer less than or equal to x	All x	Integer
`ln(x)`	Natural logarithm	$x > 0$	Real
`log(x)`	Decimal logarithm	$x > 0$	Real
`max(x,y)`	Maximum	All x, all y	Integer, if x and y are integers; otherwise, real
`min(x,y)`	Minimum	All x, all y	Integer, if x and y are integers; otherwise, real
`pow(x,y)`	Power of (x^y)	All y, if $x > 0$ $y > 0$, if $x = 0$ y integer, if $x < 0$	Real
`sqrt(x)`	Square root	$x >= 0$	Real

Trigonometric and Hyperbolic Functions

These are the trigonometric and hyperbolic functions supported by Verilog-AMS. The operands must be integers or real numbers. The simulator converts operands to real numbers if necessary.

© 2000-2015 All Rights Reserved.

The trigonometric and hyperbolic functions require operands specified in radians.

Function	Description	Domain
`sin(x)`	Sine	All x
`cos(x)`	Cosine	All x
`tan(x)`	Tangent	$x \neq n\left(\frac{\pi}{2}\right)$, n is odd
`asin(x)`	Arc-sine	-1 <= x <= 1
`acos(x)`	Arc-cosine	-1 <= x <= 1
`atan(x)`	Arc-tangent	All x
`atan2(x,y)`	Arc-tangent of x/y	All x, all y
`hypot(x,y)`	Sqrt($x^2 + y^2$)	All x, all y
`sinh(x)`	Hyperbolic sine	All x
`cosh(x)`	Hyperbolic cosine	All x
`tanh(x)`	Hyperbolic tangent	All x
`asinh(x)`	Arc-hyperbolic sine	All x
`acosh(x)`	Arc-hyperbolic cosine	x >= 1
`atanh(x)`	Arc-hyperbolic tangent	-1 <= x <= 1

Controlling How Math Domain Errors Are Handled

To control how math domain errors are handled in Verilog-A modules, you can use the `options ahdldomainerror` parameter in a Spectre control file. (In Verilog-AMS code, this parameter can be used only in the analog block.) This parameter controls how domain (out-of-range) errors in Verilog-A math functions such as `log` or `atan` are handled and determines what kind of message is issued when a domain error is found.

The `ahdldomainerror` parameter format is

Name **options ahdldomainerror=***value*

where the syntax items are defined as follows.

© 2000-2015 All Rights Reserved.

Name — The unique name you give to the `options` statement. The Spectre simulator uses this name to identify this statement in error or annotation messages

value

- `none` — If a domain error occurs, no message is issued. The simulation continues with the argument of the math function set to the nearest reasonable number to the invalid argument.

  For example, if the `` `sqrt() `` function is passed a negative value, the argument is reset to 0.0.

- `warning` — If a domain error occurs, a warning message is issued. The simulation continues with the argument of the math function set to the nearest reasonable number to the invalid argument. This is the default.

  For example, if the `` `sqrt() `` function is passed a negative value, the argument is reset to 0.0.

- `error` — If a domain error occurs, a message such as the following (which, in this example, indicates a problem with the `` `sqrt `` function) is issued.

```
Fatal error found by spectre during IC analysis, during
transient analysis `mytran'.
"acosh.va" 20: r1: negative argument passed to `sqrt()'.
(value passed was -1.000000)
```

  The simulation then terminates.

For example, you might have the following in a Spectre control file to ensure that simulation stops when a domain error occurs.

```
myoption options ahdldomainerror=error
```


© 2000-2015 All Rights Reserved.

8

Detecting and Using Events

During a simulation, the simulator generates analog and digital events that you can use to control the behavior of your modules. The simulator generates some of these events automatically at various stages of the simulation. The simulator generates other events in accordance with criteria that you specify. Your modules can detect either kind of event and use the occurrences to determine whether specified statements run.

This chapter discusses the following kinds of events

- Initial_step Event on page 117
- Final_step Event on page 118
- Cross Event on page 119
- Above Event on page 120
- Absdelta Event on page 122
- Timer Event on page 124

The Cadence Verilog®-AMS language also supports events for digital contexts. For more information, see the “Event Control” section in the “Behavioral Modeling” chapter of the *Verilog-XL Reference*.

© 2000-2015 All Rights Reserved.

Detecting and Using Events

Use the `@` operator to run a statement under the control of particular events.

```
event_control_statement ::=
        @ ( event_expr ) statement ;

event_expr ::=
        simple_event [ or event_expr ]

simple_event ::=
        initial_step_event
    |   final_step_event
    |   cross_event
    |   timer_event
    |   expression_event
    |   named_event
    |   posedge_event
    |   negedge_event
```

`statement` is the statement controlled by `event_expr`. The *`statement`* must not be a contribution statement and must not contain any analog operators. The *`statement`*:

- Cannot include expressions that use analog operators.
- Cannot be a contribution statement.

`simple_event` is an event that you want to detect. The behavior depends on the context:

- In the analog context, when, and only when, `simple_event` occurs, the simulator runs *`statement`*. Otherwise, *`statement`* is skipped. The kinds of simple events are described in the following sections.
- In the digital context, processing of the block is prevented until the event expression evaluates to true.

If you want to detect more than one kind of event, you can use the event `or` operator. Any one of the events joined with the event `or` operator causes the simulator to run *`statement`*. The following fragment, for example, sets `V(out)` to zero or one at the beginning of the analysis and at any time `V(sample)` crosses the value 2.5.

```
analog begin
    @(initial_step or cross(V(sample)-2.5, +1)) begin
         vout = (V(in) > 2.5) ;
    end
    V(out) <+ vout ;
end
```

For information on	See
initial_step_event	"Initial_step Event" on page 117

© 2000-2015 All Rights Reserved.

For information on	See
final_step_event	"Final_step Event" on page 118
cross_event	"Cross Event" on page 119
above_event	"Above Event" on page 120
timer_event	"Timer Event" on page 124
expression_event	"Event Control" in Chapter 8 of *Verilog-XL Reference*
named_event	"Event Control" in Chapter 8 of *Verilog-XL Reference*
posedge_event	"Event Control" in Chapter 8 of *Verilog-XL Reference*
negedge_event	"Event Control" in Chapter 8 of *Verilog-XL Reference*

Initial_step Event

The simulator generates an initial_step event during the solution of the first point in specified analyses, or, if no analyses are specified, during the solution of the first point of every analysis. Use the initial_step event to perform an action that should occur only at the beginning of an analysis.

```
initial_step_event ::=
        initial_step [ ( analysis_list ) ]
analysis_list ::=
        analysis_name { , analysis_name }
analysis_name ::=
        "analysis_identifier"
```

If the string in *analysis_identifier* matches the analysis being run, the simulator generates an initial_step event during the solution of the first point of that analysis. If you do not specify `analysis_list`, the simulator generates an initial_step event during the solution of the first point, or initial DC analysis, of every analysis.

In this release of Verilog-AMS, the initial_step event is supported for the `ac`, `noise`, `tran`, and `dc` sweep analyses.

The initial_step event is predefined, so you cannot redefine it in your model.

You can detect initial_step events only from within the analog block.

© 2000-2015 All Rights Reserved.

Final_step Event

The simulator generates a final_step event during the solution of the last point in specified analyses, or, if no analyses are specified, during the solution of the last point of every analysis. Use the final_step event to perform an action that should occur only at the end of an analysis.

```
final_step_event ::=
        final_step [ ( analysis_list ) ]

analysis_list ::=
        analysis_name { , analysis_name }

analysis_name ::=
        "analysis_identifier"
```

If the string in *analysis_identifier* matches the analysis being run, the simulator generates a final_step event during the solution of the last point of that analysis. If you do not specify analysis_list, the simulator generates a final_step event during the solution of the last point of every analysis.

In this release of Verilog-AMS, the final_step event is supported for the ac, noise, tran, and dc sweep analyses.

The final_step event is predefined, so you cannot redefine it in your model.

You can detect final_step events only from within the analog block.

You might use the final_step event to print out the results at the end of an analysis. For example, module bit_error_rate measures the bit-error of a signal and prints out the results at the end of the analysis. (This example also uses the timer event, which is discussed in "Timer Event" on page 124.)

```
module bit_error_rate (in, ref) ;
input in, ref ;
electrical in, ref ;
parameter real period=1, thresh=0.5 ;
integer bits, errors ;
analog begin
    @(initial_step) begin
        bits = 0 ;
        errors = 0 ;                    // Initialize the variables
    end
    @(timer(0, period)) begin
        if ((V(in) > thresh) != (V(ref) > thresh))
            errors = errors + 1;        // Check for errors each period
        bits = bits + 1 ;
    end
    @(final_step)
        $strobe("Bit error rate = %f%%", 100.0 * errors/bits );
end
endmodule
```


© 2000-2015 All Rights Reserved.

Cross Event

According to criteria you set, the simulator can generate a cross event when an expression crosses zero in a specified direction. Use the `cross` function to specify which crossings generate a cross event.

```
cross_function ::=
        cross (expr1 [ , direction [ , time_tol [ , expr_tol ] ] ] )
direction ::=
        +1 | 0 | -1
time_tol ::=
        expr2
expr_tol ::=
        expr3
```

`expr1` is the real expression whose zero crossing you want to detect.

`direction` is an integer expression set to indicate which zero crossings the simulator should detect.

If you want to	Then
Detect all zero crossings	Do not specify `direction`, or set `direction` equal to 0
Detect only zero crossings where the value is increasing	Set `direction` equal to +1
Detect only zero crossings where the value is decreasing	Set `direction` equal to -1

`time_tol` is a constant expression with a positive value, which is the largest time interval that you consider negligible. The default value is 1.0s, which is large enough that the tolerance is almost always satisfied.

`expr_tol` is a constant expression with a positive value, which is the largest difference that you consider negligible. If you specify `expr_tol`, both it and `time_tol` must be satisfied. If you do not specify `expr_tol`, the simulator uses the default `expr_tol` value of

```
1e-9 + reltol*max_value_of_the_signal
```

In addition to generating a cross event, the `cross` function also controls the time steps to accurately resolve each detected crossing.

The `cross` function is subject to the restrictions listed in "Restrictions on Using Analog Operators" on page 164.

© 2000-2015 All Rights Reserved.

The following example illustrates how you might use the `cross` function and event. The `cross` function generates a cross event each time the sample voltage increases through the value 2.5. `expr_tol` is specified as the `abstol` associated with the potential nature of the net `sample`.

```
module samphold (in, out, sample) ;
output out ;
input in, sample ;
electrical in, out, sample ;
real hold ;

analog begin
    @(cross(V(sample)-2.5, +1, 0.01n, sample.potential.abstol))
         hold = V(in) ;
    V(out) <+ transition(hold, 0, 10n) ;
end
endmodule
```

Above Event

According to criteria you set, the simulator can generate an above event when an expression becomes greater than or equal to zero. Use the `above` function to specify when the simulator generates an above event. An above event can be generated and detected during initialization. By contrast, a cross event can be generated and detected only after at least one transient time step is complete.

The `above` function is a Cadence language extension.

```
above_function ::=
        above (expr1 [ , time_tol [ , expr_tol ] ] )

time_tol ::=
        expr2

expr_tol ::=
        expr3
```

`expr1` is a real expression whose value is to be compared with zero.

`time_tol` is a constant real expression with a positive value, which is the largest time interval that you consider negligible.

`expr_tol` is a constant real expression with a positive value, which is the largest difference that you consider negligible. If you specify `expr_tol`, both it and `time_tol` must be satisfied. If you do not specify `expr_tol`, the simulator uses the value of its own `reltol` parameter.

During a transient analysis, after `t = 0`, the `above` function behaves the same as a `cross` function with the following specification.

```
cross(expr1 , 1 , time_tol, expr_tol )
```


© 2000-2015 All Rights Reserved.

During a transient analysis, the `above` function controls the time steps to accurately resolve the time when `expr1` rises to zero or above.

The `above` function is subject to the restrictions listed in "Restrictions on Using Analog Operators" on page 164.

The following example illustrates how you might use the `above` function. The function generates an above event each time the analog voltage increases through the value 3.5 or decreases through the value 1.5.

```
connectmodule elect2logic_2(aVal, dVal);
    input aVal;
    output dVal;
    electrical aVal;
    logic dVal;
    parameter real thresholdLo = 1.5;
    parameter real thresholdHi = 3.5;

    integer iVal;

    assign dVal = iVal; // direct driver/receiver propagation

    always @(above(V(aVal) - thresholdHi))
         iVal = 1'b1;

    always @(above(thresholdLo - V(aVal)))
         iVal = 1'b0;

endmodule
```

The usefulness of the `above` function becomes apparent when `elect2logic` is inserted across the `in` port of the `inv I1` instance in the following module.

```
module top;
    electrical src, gnd;
    logic out;
    ground gnd;

    vsource #(.dc(5)) V1(src,gnd);
    inv I1(src,out);

endmodule

module inv(in,out);
    input in;
    output out;

    assign out = !in;
endmodule
```

The modules describe a circuit where an analog DC voltage source, `V1`, generates a constant 5 volt signal that drives a digital inverter. Using the `above` function in `elect2logic` sets the values correctly at the end of the initialization. However, if the `above` function is replaced with the `cross` function, the value of `out` is set to 1'b1 at the end of the initialization and retains that value throughout the transient analysis. This incorrect result is caused by the fact that cross events cannot be generated or detected during initialization.

© 2000-2015 All Rights Reserved.

Absdelta Event

According to the criteria you set, the simulator can generate an absdelta event when an analog signal changes more than a specified amount, a capability that is typically used to discretize analog signals. Use the `absdelta` function to specify when the simulator generates an absdelta event.

You can use the `absdelta` function only with the AMS Designer simulator using the simulation front end (SFE) parser or the AMS Designer simulator using the UltraSim solver. You must use this function only in an `always` block.

```
absdelta_function ::=
        absdelta ( expr, delta [ , time_tol [ , expr_tol ][, enable_flag]] )
```

`expr` is an analog signal expression.

`delta` is a real expression specifying an amount of change in the value of *`expr`*. The simulator generates an event when the *`expr`* value changes more than *`delta`* plus or minus *`expr_tol`*, relative to the *`expr`* value at the previous event time.

`time_tol` is a real expression specifying a time increment after the previous time point. When the current time is within *`time_tol`* of the previous event time, no event is generated. If *`time_tol`* is not specified, the default value is the time precision of the digital simulation. A specified *`time_tol`* that is smaller than the time precision is ignored and the time precision is used instead.

`expr_tol` is a real expression, which is the largest difference in *`expr`* that you consider negligible. If you do not specify `expr_tol`, the simulator uses the absolute voltage tolerance (*`vabstol`*) of the analog solver.

`enable_flag` is an analog expression. If it is non-zero, `absdelta` functions as described above, otherwise, the `absdelta` function is inactive, which means that it does not generate any events.

The `absdelta` function generates events for the following times and conditions.

- At time zero.
- At the time when the analog solver finds a stable solution during initialization.
- When the *`expr`* value changes more than *`delta`* plus or minus *`expr_tol`*, relative to the previous absdelta event (but not when the current time is within *`time_tol`* of the previous absdelta event).
- When *`expr`* changes direction (but not when the amount of the change is less than *`expr_tol`*).

© 2000-2015 All Rights Reserved.

The following module describes an event-driven electrical to wreal conversion where the `absdelta` function is used to determine when the electrical input signal is converted to a wreal output signal.

```
`include "disciplines.vams"
`timescale 1ns / 100ps
module electrical_to_wreal (e_in, r_out);
input e_in;
output r_out;
electrical e_in;
wreal r_out;
parameter real vdelta=0.1     from (0:inf); // voltage delta
parameter real ttol=1n        from (0:1m];  // time tolerance
parameter real vtol=0.01      from (0:inf); // voltage tolerance
real sampled;

assign r_out = sampled;

always @(absdelta(V(e_in), vdelta, ttol, vtol))
    sampled = V(e_in);

endmodule
```

Without proper tolerances, the `absdelta` function might attempt to generate a large number of events when:

- the signal sampled by absdelta changes dramatically at a specific time step.
- you specify a very small signal delta value as the second argument to the `absdelta` function.

Generation of a large number of events might significantly slow down the simulation, and in some cases, might even exhaust the system memory and crash the simulation. To handle such situations, the simulator ensures that no two events are generated within the span of the time tolerance `time_tol`. The default and the minimal time tolerance is the time precision of the digital simulation. A cap is also placed on how many events can be generated in a single time step.

In addition, whenever a large number of events are to be generated, a warning message is issued. This message includes infomation such as the instance name, the Verilog-AMS source file name, and the line number where the problematic absdelta is used. The message also provides suggestions on how to correct or improve the code.

A warning message is also issued whenever you specify the time tolerance to be less than the time precision of the digital simulation. In this case, the specification is ignored and the time precision of the digital simulation is used as the time tolerance.

© 2000-2015 All Rights Reserved.

Timer Event

According to criteria you set, the simulator can generate a timer event at specified times during a simulation. Use the `timer` function to specify when the simulator generates a timer event.

Do not use the `timer` function inside conditional statements.

```
timer_function ::=
        timer ( start_time [ , period [ , timetol ]] )
```

`start_time` is a dynamic expression specifying an initial time. The simulator places a first time step at, or just beyond, the `start_time` that you specify and generates a timer event.

`period` is a dynamic expression specifying a time interval. The simulator places time steps and generates events at each multiple of `period` after `start_time`.

`timetol` is a constant expression specifying how close a placed time point must be to the actual time point.

The module `squarewave`, below, illustrates how you might use the timer function to generate timer events. In `squarewave`, the output voltage changes from positive to negative or from negative to positive at every time interval of `period/2`.

```
module squarewave (out)
output out ;
electrical out ;
parameter period = 1.0 ;
integer x ;

analog begin
    @(initial_step) x = 1 ;
    @(timer(0, period/2)) x = -x ;
    V(out) <+ transition(x, 0.0, period/100.0 ) ;
end
endmodule
```


© 2000-2015 All Rights Reserved.

9

Simulator Functions

This chapter describes the Cadence® Verilog®-AMS language simulator functions. The simulator functions let you access information about a simulation and manage the simulation's current state. You can also use the simulator functions to display and record simulation results.

For information about using simulator functions, see

- Announcing Discontinuity on page 127
- Bounding the Time Step on page 129
- Finding When a Signal Is Zero on page 130
- Querying the Simulation Environment on page 131
- Obtaining and Setting Signal Values on page 133
- Determining the Current Analysis Type on page 141
- Examining Drivers on page 138
- Implementing Small-Signal AC Sources on page 142
- Implementing Small-Signal Noise Sources on page 142
- Generating Random Numbers on page 145
- Generating Random Numbers in Specified Distributions on page 146
- Interpolating with Table Models on page 151
- Node/Net Aliasing System Functions on page 158

For information on analog operators and filters, see

- Limited Exponential Function on page 165
- Time Derivative Operator on page 165
- Time Integral Operator on page 166

© 2000-2015 All Rights Reserved.

- Circular Integrator Operator on page 167
- Delay Operator on page 170
- Transition Filter on page 171
- Slew Filter on page 175
- Implementing Laplace Transform S-Domain Filters on page 176
- Implementing Z-Transform Filters on page 182

For descriptions of functions used to control input and output, see

- Displaying Results on page 186
- Working with Files on page 192

For descriptions of functions used to control the simulator, see

- Simulator Control Functions on page 199

For a description of the `$pwr` function, which is used to specify power consumption in a module, see

- Specifying Power Consumption on page 191

For information on using user-defined functions in the Verilog-AMS language, see

- Declaring an Analog User-Defined Function on page 203
- Calling a User-Defined Analog Function on page 205

© 2000-2015 All Rights Reserved.

Announcing Discontinuity

Use the `$discontinuity` function to tell the simulator about a discontinuity in signal behavior.

```
discontinuity_function ::=
        $discontinuity[ (constant_expression) ]
```

`constant_expression`, which must be zero or a positive integer, is the degree of the discontinuity. For example, `$discontinuity`, which is equivalent to `$discontinuity(0)`, indicates a discontinuity in the equation, and `$discontinuity(1)` indicates a discontinuity in the slope of the equation.

You do not need to announce discontinuities created by switch branches or built-in functions such as `transition` and `slew`.

Be aware that using the `$discontinuity` function does not guarantee that the simulator will be able to handle a discontinuity successfully. If possible, you should avoid discontinuities in the circuits you model.

The following example shows how you might use the `$discontinuity` function while describing the behavior of a source that generates a triangular wave. As the Triangular Wave figure on page 127 shows, the triangular wave is continuous, but as the Triangular Wave First Derivative figure on page 127 shows, the first derivative of the wave is discontinuous.

Triangular Wave

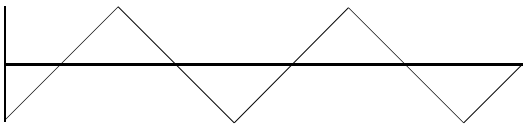

Triangular Wave First Derivative

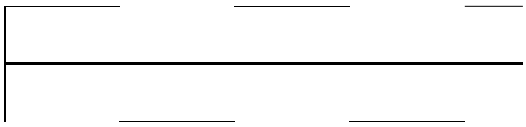

The module `trisource` describes this triangular wave source.

```
module trisource (vout) ;
output vout ;
voltage vout ;
parameter real wavelength = 10.0, amplitude = 1.0 ;
integer slope ;
real wstart ;
```


© 2000-2015 All Rights Reserved.

```
analog begin
    @(timer(0, wavelength)) begin
        slope = +1 ;
        wstart = $abstime ;
        $discontinuity (1);        // Change from neg to pos slope
    end
    @(timer(wavelength/2, wavelength)) begin
        slope = -1 ;
        wstart = $abstime ;
        $discontinuity (1);        // Change from pos to neg slope
    end
    V(vout) <+ amplitude * slope * (4 * ($abstime - wstart) / wavelength-1) ;
end
endmodule
```

The two `$discontinuity` functions in `trisource` tell the simulator about the discontinuities in the derivative. In response, the simulator uses analysis techniques that take the discontinuities into account.

The module `relay`, as another example, uses the `$discontinuity` function while modeling a relay.

```
module relay (c1, c2, pin, nin) ;
inout c1, c2 ;
input pin, nin ;
electrical c1, c2, pin, nin ;
parameter real r = 1 ;

analog begin
    @(cross(V(pin, nin) - 1, 0, 0.01n, pin.potential.abstol)) $discontinuity(0);
    if (V(pin, nin) >= 1)
        I(c1, c2) <+ V(c1, c2) / r ;
    else
        I(c1, c2) <+ 0 ;
end
endmodule
```

The $`discontinuity` function in `relay` tells the simulator that there is a discontinuity in the current when the voltage crosses the value 1. For example, passing a triangular wave like that shown in the Relay Voltage figure on page 128 through module `relay` produces the discontinuous current shown in the Relay Current figure on page 129.

Relay Voltage

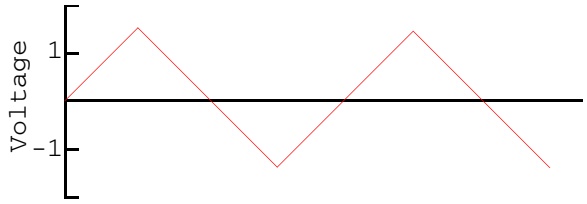

© 2000-2015
All Rights Reserved.

Relay Current

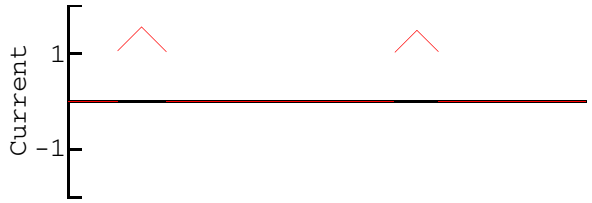

Bounding the Time Step

Use the `$bound_step` function to specify the maximum time allowed between adjacent time points during simulation.

```
bound_step_function ::=
        $bound_step ( max_step )

max_step ::=
        constant_expression
```

By specifying appropriate time steps, you can force the simulator to track signals as closely as your model requires. For example, module `sinwave` forces the simulator to simulate at least 50 time points during each cycle.

```
module sinwave (outsig) ;
output outsig ;
voltage outsig ;
parameter real freq = 1.0, ampl = 1.0 ;

analog begin
    V(outsig) <+ ampl * sin(2.0 * `M_PI * freq * $abstime) ;
    $bound_step(0.02 / freq) ;            // Max time step = 1/50 period
end
endmodule
```

Announcing and Handling Nonlinearities

Use the `$limit` function to announce nonlinearities that are other than exponential. This information is used to improve convergence.

```
limit_call_function ::=
        $limit ( access_function_reference )
    |   $limit ( access_function_reference, string, arg_list)
    |   $limit ( access_function_reference, analog_function_ID, arg_list)
```

`access_function_reference` is the reference that is being limited.

`string` is a built-in simulator function that you recommend be used to compute the return value. In this release, the syntax of `string` is not checked.

© 2000-2015 All Rights Reserved.

`analog_function_ID` is a user-defined analog function that you recommend be used to compute the return value. In this release, the syntax of `analog_function_ID` is not checked.

`arg_list` is a list of arguments for the built-in or user-defined function. In this release, the syntax of `arg_list` is not checked.

Note: Although the `$limit` function is allowed, Cadence tools, in this release, do nothing with the information. Consequently, coding

```
vdio = $limit(V(a,c), spicepnjlim, $vt, vcrit);
```

is equivalent to coding

```
vdio = V(a,c);
```

Finding When a Signal Is Zero

Use the `last_crossing` function to find out what the simulation time was when a signal expression last crossed zero.

```
last_crossing_function ::=
        last_crossing ( signal_expression , direction )
```

Set *`direction`* to indicate which crossings the simulator should detect.

If you want to	Then
Detect all crossings	Set *`direction`* equal to 0
Detect only crossings where the value is increasing	Set *`direction`* equal to +1
Detect only crossings where the value is decreasing	Set *`direction`* equal to -1

Before the first detectable crossing, the `last_crossing` function returns a negative value.

The `last_crossing` function is subject to the restrictions listed in "Restrictions on Using Analog Operators" on page 164.

The `last_crossing` function does not control the time step to get accurate results and uses interpolation to estimate the time of the last crossing. To improve the accuracy, you might want to use the `last_crossing` function together with the `cross` function.

© 2000-2015 All Rights Reserved.

For example, module `period` calculates the period of the input signal, using the `cross` function to resolve the times accurately.

```
module period (in) ;
input in ;
voltage in ;
integer crosscount ;
real latest, earlier ;

analog begin
    @(initial_step) begin
        crosscount = 0 ;
        earlier = 0 ;
    end

    @(cross(V(in), +1)) begin
        crosscount = crosscount + 1 ;
        earlier = latest ;
    end
    latest = last_crossing(V(in), +1) ;
    @(final_step) begin
        if (crosscount < 2)
            $strobe("Could not measure the period.") ;
        else
            $strobe("Period = %g, Crosscount = %d", latest-earlier, crosscount) ;
    end
end
endmodule
```

Querying the Simulation Environment

Use the simulation environment functions described in the following sections to obtain information about the current simulation environment.

Obtaining the Current Simulation Time

Verilog-AMS provide two environment parameter functions that you can use to obtain the current simulation time: `$abstime` and `$realtime`.

$abstime Function

Use the $abstime function to obtain the current simulation time in seconds.

```
abstime_function ::=
        $abstime
```

$realtime Function

Use the `$realtime` function to obtain the current simulation time in seconds.

© 2000-2015 All Rights Reserved.

```
realtime_function ::=
        $realtime[(time_scale)]
```

time_scale is a value used to scale the returned simulation time. The valid values are the integers 1, 10, and 100, followed by one of the scale factors in the following table.

Scale Factor	Meaning
s	Seconds
ms	Milliseconds
us	Microseconds
ns	Nanoseconds
ps	Picoseconds
fs	Femtoseconds

If you do not specify *time_scale*, the return value is scaled to the `` `time_unit `` of the module that invokes the function.

For example, to print out the current simulation time in seconds, you might code

```
$strobe("Simulation time = %e", $realtime(1s)) ;
```

Obtaining the Current Ambient Temperature

Use the `$temperature` function to obtain the ambient temperature of a circuit in degrees Kelvin.

```
temperature_function ::=
        $temperature
```

The `$temperature` function is supported in both analog and digital contexts. In digital context, the `$temperature` function can be used only in `initial` and `always` blocks, continuous assignments, and system tasks and functions. It is not supported in port connections.

In a digital mixed-signal design (DMS), the `$temperature` function returns the value 300.15 degree Kelvin units by default.

Obtaining the Thermal Voltage

Use the `$vt` function to obtain the thermal voltage, `(kT/q)`, of a circuit.

© 2000-2015 All Rights Reserved.

```
vt_function ::=
        $vt[(temp)]
```

temp is the temperature, in degrees Kelvin, at which the thermal voltage is to be calculated. If you do not specify *temp*, the thermal voltage is calculated at the temperature returned by the `$temperature` function.

Querying the scale, gmin, and iteration Simulation Parameters

Use the `$simparam` function to query the value of the `scale`, `gmin`, or `iteration` simulation parameters. The returned value is always a real value.

```
simparam_function ::=
        $simparam ("param" [, expression])
```

param is one of the following simulation parameters.

Simulation Parameter	Meaning
`scale`	Scale factor for device instance geometry parameters.
`gmin`	Minimum conductance placed in parallel with nonlinear branches.
`iteration`	Iteration number of the analog solver.

expression is an expression whose value is returned if *param* is not recognized.

For example, to return the value of the simulation parameter named `gmin`, you might code

```
$strobe("gmin = %e", $simparam("gmin")) ;
```

To specify that a value of 2.0 is to be returned when the specified simulation parameter is not found, you might code

```
$strobe("gmin = %e", $simparam("gmin", 2.0)) ;
```

Obtaining and Setting Signal Values

Use the access functions to obtain or set the signal values.

```
access_function_reference ::=
        bvalue
    |   pvalue

bvalue ::=
        access_identifier ( analog_signal_list )
```


© 2000-2015 All Rights Reserved.

```
pvalue ::=
        access_identifier (<port_scalar_expression>)

access_identifier ::=
    nature_access_identifier
    |potential
    |flow

analog_signal_list ::=
        branch_identifier
    |   array_branch_identifier [ genvar_expression ]
    |   net_or_port_scalar_expression
    |   net_or_port_scalar_expression , net_or_port_scalar_expression

net_or_port_scalar_expression ::=
        net_or_port_identifier
    |   vector_net_or_port_identifier [ genvar_expression ]

port_scalar_expression ::=
        port_identifier
    |   array_port_identifier [ constant_expression ]
    |   vector_port_identifier [ constant_expression ]
```

Access functions in Verilog-AMS take their names from the discipline associated with a node, port, or branch. Specifically, the access function names are defined by the access attributes specified for the discipline's natures.

For example, the `electrical` discipline, as defined in the standard definitions, uses the nature `Voltage` for potential. The nature `Voltage` is defined with the access attribute equal to `V`. Consequently, the access function for electrical potential is named `V`. For more information, see the files installed in *`your_install_dir`*`/tools/spectre/etc/ahdl`.

To set a voltage, use the `V` access function on the left side of a contribution statement.

```
V(out) <+ I(in) * Rparam ;
```

To obtain a voltage, you might use the `V` access function as illustrated in the following fragment.

```
I(c1, c2) <+ V(c1, c2) / r ;
```

You can also use the `potential` or `flow` access function to access the potential or flow of a named or unnamed branch. If an unnamed branch comprises of two nets, ensure that the disciplines of both nets is the same before using the `potential` and `flow` functions, as shown below.

```
electrical in, out;
potential( in, out ) <+ flow( in, out ) * 1k;
```

The simulator provides specialized support for obtaining (from analog contexts only) the voltages of nets or ports specified by out-of-module references. For example, you can use a block like the following:

```
analog begin
   tmp_a_b = V(top.level1.level2.node_a, top.level1.level2.node_b);
   tmp_a = V(top.level1.level2.node_a);
```


© 2000-2015 All Rights Reserved.

```
   tmp_c_b = V(top.level1.level2.node_c[1], top.level1.level2.node_b[1]);
   $display("tmp_a_b = %g, tmp_a = %g, tmp_c_b =%g\n", tmp_a_b, tmp_a, tmp_c_b);
end
```

If you want to set the voltage on a net or port that is an out-of-module reference, you must be sure to define the discipline of that net or port explicitly as `electrical`. For example:

```
// Contents of oomr.v
`include "disciplines.vams"

module top;

   electrical a;   // node a referenced in module sub
   electrical gnd;

   sub (* integer library_binding = "work_lib"; *) Isub (  );

   resistor #(.r(1.000)) (* integer library_binding = "analogLib"; *) R1 (a, gnd);

   analog begin
      V(gnd) <+ 0.0;
      V(Isub.b) <+ 18.0;   // out-of-module reference to node b,
                           // explicitly declared as electrical in module sub
   end

endmodule
```

```
// Contents of sub.v
`include "disciplines.vams"

module sub;
   electrical b;   // node b referenced in module top

   electrical gnd;

   resistor #(.r(1.000)) (* integer library_binding = "analogLib"; *) R1 (b ,gnd );

   analog begin
      V(top.a) <+ 17.0;   // out-of-module reference to top.a,
                          // explicitly declared as electrical in module top
      V(gnd)<+ 0.0;
   end

endmodule
```

The simulator provides limited support for obtaining (from analog contexts only) the currents of nets or ports specified by out-of-module references. For more information, see "Obtaining Currents Using Out-of-Module References" on page 137.

You can apply access functions only to scalars or to individual elements of a vector. You select the scalar element of a vector using an index. For example, `V(in[1])` accesses the voltage `in[1]`.

To see how you can use access functions, see the "Access Function Formats" table, below. In the table, `b1` refers to a branch, `n1` and `n2` refer to either nodes or ports, and `p1` refers to a port. The branches, nodes, and ports in this table belong to the `electrical` discipline,

© 2000-2015 All Rights Reserved.

where `V` is the name of the access function for the voltage (potential) and `I` is the name of the access function for the current (flow). Access functions for other disciplines have different names, but you use them in the same ways. For example, `MMF` is the access function for potential in the `magnetic` discipline.

Access Function Formats

Format	Effect
`V(b1)`	Accesses the potential across branch `b1`
`potential(b1)`	Alternative method to access the voltage across branch `b1`
`V(n1)`	Accesses the potential of `n1` relative to ground
`V(n1,n2)`	Accesses the potential difference on the unnamed branch between `n1` and `n2`
`I(b1)`	Accesses the current on branch `b1`
`flow(b1)`	Alternative method to access the current on branch `b1`
`I(n1)`	Accesses the current flowing from `n1` to ground
`I(n1, n2)`	Accesses the current flowing on the unnamed branch between `n1` and `n2`; node `n1` and node `n2` cannot be the same node
`I(<p1>)`	Accesses the current flow into the module through port `p1`.

Notice the use of the port access operator (`<>`) in the last format. The port identifier in a port access function must be a scalar or resolve to a constant node of a bus port accessed by a constant expression. You cannot use the port access operator to access potential, nor can you use the port access operator on the left side of a contribution operator. You can use the port access operator only in modules that do not instantiate sub-hierarchies or primitives.

You can use a port access to monitor the flow. In the following example, the simulator issues a warning if the total diode current becomes too large.

```
module diode (a, c) ;
electrical a, c ;
branch (a, c) diode, cap ;
parameter real is=1e-14, tf=0, cjo=0, imax=1, phi=0.7 ;

analog begin
    I(diode) <+ is*(limexp(V(diode)/$vt) -1) ;
    I(cap) <+ ddt(tf*I(diode) - 2 * cjo * sqrt(phi * (phi * V(cap)))) ;
    if (I(<a>) > imax) // Checks current through port
        $strobe( "Warning: diode is melting!" ) ;
    end
endmodule
```


© 2000-2015 All Rights Reserved.

Obtaining Currents Using Out-of-Module References

Use the Cadence-provided system task `$cds_iprobe` to return the current of an out-of-module port.

```
OOM_current_reference ::=
        $cds_iprobe("hierarchical_name")
```

`hierarchical_name` is the hierarchical name of the out-of-module scalar port or individual bit of a vector port whose current you want to access.

The `$cds_iprobe` task is subject to the following limitations:

- The returned value is always the value at the last accepted simulation point. The value remains constant until the next simulation point is accepted. As a consequence, you cannot use the `$cds_iprobe` task to model a source for a current controlled device.
- The `$cds_iprobe` task can be used only in analog contexts.
- The `$cds_iprobe` task can be used only when the Spectre solver is active. This task cannot be used with the UltraSim solver, nor with the `ncelab -amsfastspice` option.
- You must have an active Tcl current probe set up to probe the current that the `$cds_iprobe` task returns.

For example, you set up a Tcl probe with the following command.

```
ncsim> probe -create -flow -shm -port top.I1
```

You create and simulate the following modules:

```
module top;
  electrical a, gnd;
  ground gnd;
  real x;
  vsource #(.type("sine"), .ampl(11), .freq(1k)) V1(a,gnd);
  leaf l1(a,gnd);
  analog begin
//   The top.I1.a below is an out-of-module reference.
     $display("I<top.l1.a>=%g\n", $cds_iprobe("top.l1.a"));
  end
endmodule

module leaf(a,b);
  electrical a, b;
  resistor #(.r(1.0)) r1(a,b);
Endmodule
```

The `$display` statement in the analog block displays the current of port `a` in the instance of the `leaf` module.

© 2000-2015 All Rights Reserved.

Accessing Attributes

Use the hierarchical referencing operator to access the attributes for a node or branch.

```
attribute_reference ::=
        node_identifier.pot_or_flow.attribute_identifier

pot_or_flow ::=
        potential
    |   flow
```

node_identifier is the node or branch whose attribute you want to access.

attribute_identifier is the attribute you want to access.

For example, the following fragment illustrates how to access the abstol values for a node and a branch.

```
electrical a, b, n1, n2;
branch (n1, n2) cap ;
parameter real c= 1p;
analog begin
    I(a,b) <+ c*ddt(V(a,b), a.potential.abstol) ;  // Access abstol for node
    I(cap) <+ c*ddt(V(cap), n1.potential.abstol) ; // Access abstol for branch
end
```

Examining Drivers

A *driver* of a signal is one of the following:

- A process that assigns a value to the signal
- A connection of the signal to an output port of a module instance or simulation primitive

Each driver can have both a present value and a pending value. The present value is the present contribution of the driver to the signal. The pending value is the next scheduled contribution, if any, of the driver to the signal.

The drivers associated with a signal are numbered from zero to one less than the number of drivers. For example, if there are five associated drivers, then they have the numbers 0, 1, 2, 3, and 4.

The next sections describe the Verilog-AMS driver access functions you can use to create connect modules that are controlled by the digital drivers in ordinary modules. Note that

- Driver access functions (including the `driver_update` event keyword) can be used only in the digital behavioral blocks of connect modules. They cannot be used in ordinary modules.

© 2000-2015 All Rights Reserved.

- Driver access functions (including the `driver_update` event keyword) are sensitive to drivers of only ordinary modules
- . These functions automatically ignore any drivers found inside connect modules.

Counting the Number of Drivers

Use the `$driver_count` function to determine how many drivers are associated with a specified digital signal.

```
driver_count_function ::=
        $driver_count ( signal )
```

signal is the name of the digital signal.

The `$driver_count` function returns an integer, which is the number of drivers associated with *signal*.

Determining the Value Contribution of a Driver

Use the `driver_state` function to determine the present value contribution of a specified driver to a specified signal.

```
driver_state_function ::=
        $driver_state ( signal , driver_index )
```

signal is the name of the digital signal.

driver_index is an integer number between 0 and N-1 where N is the total number of drivers contributing to the signal value.

The `driver_state` function returns one of the following state values: 0, 1, `x`, or `z`.

Determining the Strength of a Driver

Use the `driver_strength` function to determine the strength contribution of a specified driver to a specified signal.

```
driver_strength_function ::=
        $driver_strength ( signal , driver_index )
```

signal is the name of the digital signal.

driver_index is an integer number between 0 and N-1 where N is the total number of drivers contributing to the signal value.

© 2000-2015 All Rights Reserved.

The `driver_strength` function returns two strengths: bits 5 through 3 for `strength0` and bits 2 through 0 for `strength1`.

If the value returned is 0 or 1, `strength0` returns the high end of the strength range and `strength1` returns the low end of the strength range. Otherwise, the strengths of both `strength0` and `strength1` are defined as shown below.

strength0									**strength1**								
Bits	7 Su0	6 St0	5 Pu0	4 La0	3 We0	2 Me0	1 Sm0	0 HiZ0	0 HiZ1	1 Sm1	2 Me1	3 We1	4 La1	5 Pu1	6 St1	7 Su1	Bits
B5	1	1	1	1	0	0	0	0	0	0	0	0	1	1	1	1	B2
B4	1	1	0	0	1	1	0	0	0	0	1	1	0	0	1	1	B1
B3	1	0	1	0	1	0	1	0	0	1	0	1	0	1	0	1	B0

For more information, see the “Logic Strength Modeling” section, of the “Gate and Switch Level Modeling” chapter, in the *Verilog-XL Reference*.

Detecting Updates to Drivers

Use the `driver_update` event keyword to determine when a driver of a signal is updated by the addition of a new pending value.

```
driver_update_event_keyword ::=
        driver_update ( signal )
```

`signal` is the name of the digital signal.

The `driver_update` event occurs any time a new pending value is added to the driver, even when there is no change in the resolved value of the signal.

Use the `driver_update` event keyword in conjunction with the event detection operator to detect updates. For example, the `statement` in the following code executes any time a driver of the `clock` signal is updated.

```
always @ (driver_update clock)
    statement ;
```


© 2000-2015 All Rights Reserved.

Analysis-Dependent Functions

The analysis-dependent functions change their behavior according to the type of analysis being performed.

Determining the Current Analysis Type

Use the `analysis` function to determine whether the current analysis type matches a specified type. By using this function, you can design modules that change their behavior during different kinds of analyses.

```
analysis ( analysis_list )
analysis_list ::=
        analysis_name { , analysis_name }
analysis_name ::=
        "analysis_type"
```

`analysis_type` is one of the following analysis types.

Analysis Types and Descriptions

Analysis Type	Analysis Description
`dc`	OP or DC analysis
`static`	Any equilibrium point calculation, including a DC analysis as well as those that precede another analysis, such as the DC analysis that precedes an AC or noise analysis, or the initial-condition analysis that precedes a transient analysis
`tran`	Transient analysis

The following table describes the values returned by the `analysis` function for some of the commonly used analyses. A return value of 1 represents `TRUE` and a value of 0 represents `FALSE`.

	Simulator Analysis Type						
Argument	**DC**	**TRAN**		**AC**		**NOISE**	
		OP	**TRAN**	**OP**	**AC**	**OP**	**AC**
`static`	1	1	0	1	0	1	0
`ic`	0	1	0	0	0	0	0

© 2000-2015 All Rights Reserved.

Argument	Simulator Analysis Type						
	DC	TRAN		AC		NOISE	
		OP	TRAN	OP	AC	OP	AC
dc	1	0	0	0	0	0	0
tran	0	1	1	0	0	0	0
ac	0	0	0	1	1	0	0
noise	0	0	0	0	0	1	1

You can use the `analysis` function to make module behavior dependent on the current analysis type.

```
if (analysis("dc", "ic"))
    out = ! V(in) > 0.0 ;
else
    @(cross (V(in),0)) out = ! out
V(out) <+ transition (out, 5n, 1n, 1n) ;
```

Implementing Small-Signal AC Sources

Use the `ac_stim` function to implement a sinusoidal stimulus for small-signal analysis.

ac_stim ([**"***analysis_type***"** [**,** *mag* [**,** *phase*]]] **)**

analysis_type, if you specify it, must be one of the analysis types listed in the Analysis Types and Descriptions table on page 141. The default for *analysis_type* is `ac`. The *mag* argument is the magnitude, with a default of 1. *phase* is the phase in radians, with a default of 0.

The `ac_stim` function models a source with magnitude *mag* and phase *phase* only during the *analysis_type* analysis. During all other small-signal analyses, and during large-signal analyses, the `ac_stim` function returns 0.

Implementing Small-Signal Noise Sources

Verilog-AMS provides three functions to support noise modeling during small-signal analyses:

- `white_noise` function
- `flicker_noise` function
- `noise_table` function

© 2000-2015 All Rights Reserved.

White_noise Function

Use the `white_noise` function to generate white noise, noise whose current value is completely uncorrelated with any previous or future values.

`white_noise(` *`PSD`* `[` **`, "`***`name`***`"`**`]`**

`PSD` is the power spectral density of the source where *`PSD`* is specified in units of A^2/Hz or V^2/Hz.

`name` is a label for the noise source. The simulator uses *`name`* to identify the contributions of noise sources to the total output noise. The simulator combines into a single source all noise sources with the same name from the same module instance.

The `white_noise` function is active only during small-signal noise analyses and returns 0 otherwise.

For example, you might include the following fragment in a module describing the behavior of a diode.

```
I(diode) <+ white_noise(2 * `P_Q * Id, "shot" ) ;
```

For a resistor, you might use a fragment like the following.

```
V(res) <+ white_noise(4 * `P_K * $temperature * rs, "thermal");
```

flicker_noise Function

Use the `flicker_noise` function to generate pink noise that varies in proportion to:

$$1/f^{\exp}$$

The syntax for the `flicker_noise` function is

`flicker_noise(` *`power`*`,` *`exp`* `[` **`, "`***`name`***`"`**`]`**

`power` is the power of the source at 1 Hz.

`name` is a label for the noise source. The simulator uses *`name`* to identify the contributions of noise sources to the total output noise. The simulator combines into a single source all noise sources with the same name from the same module instance.

The `flicker_noise` function is active only during small-signal noise analyses and returns 0 otherwise.

© 2000-2015 All Rights Reserved.

For example, you might include the following fragment in a module describing the behavior of a diode:

```
I(diode) <+ flicker_noise( kf * pow(abs(I(diode)),af),ef) ;
```

noise_table Function

Use the `noise_table` function to generate noise where the spectral density of the noise varies as a piecewise linear function of frequency.

noise_table(*vector* | *string* [**, "***name***"**]**)**

The first argument to the `noise_table` function is a vector or a string.

vector is an array containing pairs of real numbers. The first number in each pair represents the frequency in hertz and the second number is the power at that frequency.

string is an input file containing frequency and power values specified in pairs. Each pair is specified in a new line and is separated by space(s) or tab(s). You can comment a line by inserting a comment (#) at the beginning of the line. Comments end with a new line. The input file can only be a text file and the values must be real numbers or integers. In addition, each frequency value must be unique.

It is recommended that you specify each noise pair in the order of ascending frequency. However, if required, the simulator internally sorts the pairs in the order of ascending frequency.

The `noise_table` function uses the linear interpolation method to calculate the spectral density for each frequency. The power associated with the lowest frequency specified in the table is taken as the associated power for all frequencies below the smallest frequency. Similarly, the power associated with the highest frequency specified in the table is taken as the associated power for all frequencies above the highest frequency.

The following is an example of the input file:

```
# noise_table_input.tbl
# Example of input file format for noise_table
#
# freq        pwr
1.0e0       1.348720e-23
1.0e1       5.482480e-23
1.0e2       7.135790e-23
1.0e3       1.811153e-22
1.0e4       3.726892e-22
1.0e5       7.412361e-22
1.0e6       2.172611e-21
```


© 2000-2015 All Rights Reserved.

```
# End
```

name is a label for the noise source. The simulator uses *name* to identify the contributions of noise sources to the total output noise. The simulator combines into a single source all noise sources with the same name from the same module instance.

The `noise_table` function is active only during small-signal noise analyses and returns 0 otherwise.

For example, you might include the following fragment in an analog block:

```
V(p,n) <+ noise_table({1,2,100,4,1000,5,1000000,6}, "noitab");
```

In this example, the power at every frequency lower than 1 is assumed to be 2; the power at every frequency above 1000000 is assumed to be 6.

Generating Random Numbers

Use the `$random` function to generate a signed integer, 32-bit, pseudorandom number.

$random [**(** *seed* **)**] **;**

seed is a reg, integer, or time variable used to initialize the function. The seed provides a starting point for the number sequence and allows you to restart at the same point. If, as Cadence recommends, you use *seed*, you must assign a value to the variable before calling the `$random` function.

The `$random` function generates a new number every time step.

Individual `$random` statements with different seeds generate different sequences, and individual `$random` statements with the same seed generate identical sequences.

The following code fragment uses the absolute value function and the modulus operator to generate integers between 0 and 99.

```
// There is a 5% chance of signal loss.
module randloss (pinout) ;
electrical pinout ;
integer randseed, randnum;

analog begin
    @ (initial_step) begin
        randseed = 123 ;    // Initialize the seed just once
    end
    randnum = abs($random(randseed) % 100) ;
    if (randnum < 5)
        V(pinout) <+ 0.0 ;
    else
        V(pinout) <+ 3.0 ;
end // of analog block

endmodule
```


© 2000-2015 All Rights Reserved.

Generating Random Numbers in Specified Distributions

Verilog-AMS provides functions that generate random numbers in the following distribution patterns:

- Uniform
- Normal (Gaussian)
- Exponential
- Poisson
- Chi-square
- Student's T
- Erlang

In releases prior to IC5.0, the functions beginning with `$dist` return real numbers rather than integer numbers. If you need to continue getting real numbers in more recent releases, change each `$dist` function to the corresponding `$rdist` function.

Uniform Distribution

Use the `$rdist_uniform` function to generate random real numbers (or the `$dist_uniform` function to generate integer numbers) that are evenly distributed throughout a specified range. The `$rdist_uniform` function is not supported in digital contexts.

```
$rdist_uniform ( seed , start , end ) ;
$dist_uniform ( seed , start , end ) ;
```

seed is a scalar integer variable used to initialize the sequence of generated numbers. *seed* must be a variable because the function updates the value of *seed* at each iteration. To ensure generation of a uniform distribution, change the value of *seed* only when you initialize the sequence.

start is an integer or real expression that specifies the smallest number that the `$dist_uniform` function is allowed to return. *start* must be smaller than *end*.

end is an integer or real expression that specifies the largest number that the `$dist_uniform` function is allowed to return. *end* must be larger than *start*.

The following module returns a series of real numbers, each of which is between 20 and 60 inclusively.

© 2000-2015 All Rights Reserved.

```
module distcheck (pinout) ;
electrical pinout ;
parameter integer start_range = 20 ;        // A parameter
integer seed, end_range;
real rrandnum ;

analog begin
    @ (initial_step) begin
        seed = 23 ;                        // Initialize the seed just once
        end_range = 60 ;                   // A variable
    end
    rrandnum = $rdist_uniform(seed, start_range, end_range);
    $display ("Random number is %g", rrandnum ) ;

// The next line shows how the seed changes at each
// iterative use of the distribution function.

    $display ("Current seed is %d", seed) ;

    V(pinout) <+ rrandnum ;
end // of analog block

endmodule
```

Normal (Gaussian) Distribution

Use the `$rdist_normal` function to generate random real numbers (or the `$dist_normal` function to generate integer numbers) that are normally distributed. The `$rdist_normal` function is not supported in digital contexts.

$rdist_normal (*seed* , *mean* , *standard_deviation*) ;
$dist_normal (*seed* , *mean* , *standard_deviation*) ;

seed is a scalar integer variable used to initialize the sequence of generated numbers. *seed* must be a variable because the function updates the value of *seed* at each iteration. To ensure generation of a normal distribution, change the value of *seed* only when you initialize the sequence.

mean is an integer or real expression that specifies the value to be approached by the mean value of the generated numbers.

standard_deviation is an integer or real expression that determines the width of spread of the generated values around *mean*. Using a larger *standard_deviation* spreads the generated values over a wider range.

To generate a gaussian distribution, use a *mean* of 0 and a *standard_deviation* of 1. For example, the following module returns a series of real numbers that together form a gaussian distribution.

```
module distcheck (pinout) ;
electrical pinout ;
integer seed ;
real rrandnum ;

analog begin
    @ (initial_step) begin
```


© 2000-2015 All Rights Reserved.

```
        seed = 23 ;
    end
    rrandnum = $rdist_normal( seed, 0, 1 ) ;
    $display ("Random number is %g", rrandnum ) ;
    V(pinout) <+ rrandnum ;
end // of analog block

endmodule
```

Exponential Distribution

Use the `$rdist_exponential` function to generate random real numbers (or the `$dist_exponential` function to generate integer numbers) that are exponentially distributed. The `$rdist_exponential` function is not supported in digital contexts.

$rdist_exponential (*seed* , *mean*) ;
$dist_exponential (*seed* , *mean*) ;

seed is a scalar integer variable used to initialize the sequence of generated numbers. *seed* must be a variable because the function updates the value of *seed* at each iteration. To ensure generation of an exponential distribution, change the value of *seed* only when you initialize the sequence.

mean is an integer or real value greater than zero. *mean* specifies the value to be approached by the mean value of the generated numbers.

For example, the following module returns a series of real numbers that together form an exponential distribution.

```
module distcheck (pinout) ;
electrical pinout ;
integer seed, mean ;
real rrandnum ;

analog begin
    @ (initial_step) begin
        seed = 23 ;
        mean = 5 ;              // Mean must be > 0
    end
    rrandnum = $rdist_exponential(seed, mean) ;
    $display ("Random number is %g", rrandnum ) ;
    V(pinout) <+ rrandnum ;
end // of analog block

endmodule
```

Poisson Distribution

Use the `$rdist_poisson` function to generate random real numbers (or the `$dist_poisson` function to generate integer numbers) that form a Poisson distribution. The `$rdist_poisson` function is not supported in digital contexts.

© 2000-2015 All Rights Reserved.

```
$rdist_poisson ( seed , mean ) ;
$dist_poisson ( seed , mean ) ;
```

seed is a scalar integer variable used to initialize the sequence of generated numbers. *seed* must be a variable because the function updates the value of *seed* at each iteration. To ensure generation of a Poisson distribution, change the value of *seed* only when you initialize the sequence.

mean is an integer or real value greater than zero. *mean* specifies the value to be approached by the mean value of the generated numbers.

For example, the following module returns a series of real numbers that together form a Poisson distribution.

```
module distcheck (pinout) ;
electrical pinout ;
integer seed, mean ;
real rrandnum ;

analog begin
    @ (initial_step) begin
        seed = 23 ;
        mean = 5 ;                    // Mean must be > 0
    end
    rrandnum = $rdist_poisson(seed, mean) ;
    $display ("Random number is %g", rrandnum ) ;
    V(pinout) <+ rrandnum ;
end // of analog block

endmodule
```

Chi-Square Distribution

Use the `$rdist_chi_square` function to generate random real numbers (or the `$dist_chi_square` function to generate integer numbers) that form a chi-square distribution. The `$rdist_chi_square` function is not supported in digital contexts.

```
$rdist_chi_square ( seed , degree_of_freedom ) ;
$dist_chi_square ( seed , degree_of_freedom ) ;
```

seed is a scalar integer variable used to initialize the sequence of generated numbers. *seed* must be a variable because the function updates the value of *seed* at each iteration. To ensure generation of a chi-square distribution, change the value of *seed* only when you initialize the sequence.

degree_of_freedom is an integer value greater than zero. *degree_of_freedom* determines the width of spread of the generated values. Using a larger *degree_of_freedom* spreads the generated values over a wider range.

For example, the following module returns a series of real numbers that together form a chi-square distribution.

© 2000-2015 All Rights Reserved.

```
module distcheck (pinout) ;
electrical pinout ;
integer seed, dof ;
real rrandnum ;

analog begin
    @ (initial_step) begin
        seed = 23 ;
        dof = 5 ;           // Degree of freedom must be > 0
    end
    rrandnum = $rdist_chi_square(seed, dof) ;
    $display ("Random number is %g", rrandnum ) ;
    V(pinout) <+ rrandnum ;
end // of analog block

endmodule
```

Student's T Distribution

Use the `$rdist_t` function to generate random real numbers (or the `$dist_t` function to generate integer numbers) that form a Student's T distribution. The `$rdist_t` function is not supported in digital contexts.

$rdist_t (*seed* , *degree_of_freedom*) ;
$dist_t (*seed* , *degree_of_freedom*) ;

seed is a scalar integer variable used to initialize the sequence of generated numbers. *seed* must be a variable because the function updates the value of *seed* at each iteration. To ensure generation of a Student's T distribution, change the value of *seed* only when you initialize the sequence.

degree_of_freedom is an integer value greater than zero. *degree_of_freedom* determines the width of spread of the generated values. Using a larger *degree_of_freedom* spreads the generated values over a wider range.

For example, the following module returns a series of real numbers that together form a Student's T distribution.

```
module distcheck (pinout) ;
electrical pinout ;
integer seed, dof ;
real rrandnum ;

analog begin
    @ (initial_step) begin
        seed = 23 ;
        dof = 15 ; // Degree of freedom must be > 0
    end
    rrandnum = $rdist_t(seed, dof) ;
    $display ("Random number is %g", rrandnum ) ;
    V(pinout) <+ rrandnum ;
end // of analog block

endmodule
```


© 2000-2015 All Rights Reserved.

Erlang Distribution

Use the `$rdist_erlang` function to generate random real numbers (or the `$dist_erlang` function to generate integer numbers) that form an Erlang distribution. The `$rdist_erlang` function is not supported in digital contexts.

```
$rdist_erlang ( seed , k , mean ) ;
$dist_erlang ( seed , k , mean ) ;
```

seed is a scalar integer variable used to initialize the sequence of generated numbers. *seed* must be a variable because the function updates the value of *seed* at each iteration. To ensure generation of an Erlang distribution, change the value of *seed* only when you initialize the sequence.

k is an integer value greater than zero. Using a larger value for *k* decreases the variance of the distribution.

mean is an integer or real value greater than zero. *mean* specifies the value to be approached by the mean value of the generated numbers.

For example, the following module returns a series of real numbers that together form an Erlang distribution.

```
module distcheck (pinout) ;
electrical pinout ;
integer seed, k, mean ;
real rrandnum ;

analog begin
    @ (initial_step) begin
        seed = 23 ;
        k = 20 ;                // k must be > 0
        mean = 15 ;             // Mean must be > 0
    end
    rrandnum = $rdist_erlang(seed, k, mean) ;
    $display ("Random number is %g", rrandnum ) ;
    V(pinout) <+ rrandnum ;
end // of analog block

endmodule
```

Interpolating with Table Models

Use the `$table_model` function to model the behavior of a design by interpolating between and extrapolating outside of data points.

```
table_model_declaration ::=
    $table_model(variables , table_source [ , ctrl_string ] )

variables ::=
        independent_var { , 2nd_independent_var [ , nth_independent_var ]}
```


© 2000-2015 All Rights Reserved.

```
table_source ::=
        data_file
    |   table_model_array

data_file ::=
        "filename"
    |   string_param

table_model_array ::=
        array_ID { , 2nd_array_ID [ , nth_array_ID ]}, output_array_ID

ctrl_string ::=
        "sub_ctrl_string [ , sub_ctrl_string ][; dependent_selector ]"

sub_ctrl_string ::=
        I
    |   D
    |   [ degree_char ] [ extrap_char [ extrap_char ]]

degree_char ::=
        1 | 2 | 3

extrap_char ::=
        C | L | S | E

dependent_selector ::=
    positive_integer_number
```

independent_var is an independent model variable. An *independent_var* can be any legal numerical expression that you can assign to an analog signal. You must specify an independent model variable for each dimension with a corresponding sub_ctrl_string *other than* I (ignore). You must *not* specify an independent model variable for dimensions that have a sub_ctrl_string of I (ignore).

Note: The I (ignore) sub_ctrl_string and support for more than one dimension are extensions beyond the Verilog-AMS LRM, Version 2.2.

data_file is the text file that stores the sample points. You can either give the file name directly or use a string parameter. For more information, see "Table Model File Format" on page 154.

table_model_array is a set of one-dimensional arrays that contains the data points to pass to the $table_model function. The size of the arrays is the same as the number of sample points. The data is stored in the arrays so that for the kth dimension of the ith sample point, *kth_dim_array_identifier*[i] = X_{ik} and so that for the ith sample point *output_array_identifier*[i] = Y_i. For an example, see "Example: Preparing Data in One-Dimensional Array Format" on page 156.

ctrl_string controls the numerical aspects of the interpolation process. It consists of subcontrol strings for each dimension.

sub_ctrl_string specifies the handling for each dimension.

When you specify I (ignore), the software ignores the corresponding dimension (column) in the data file. You might use this setting to skip over index numbers, for

© 2000-2015 All Rights Reserved.

example. When you associate the `I` (ignore) value with a dimension, you must not specify a corresponding *`independent_var`* for that dimension.

When you specify `D` (discrete), the software does not use interpolation for this dimension. If the software cannot find the exact value for the dimension in the corresponding dimension in the data file, it issues an error message and the simulation stops.

`degree_char` is the degree of the splines used for interpolation. The degree can be 1 (linear interpolation), 2 (quadratic spline interpolation), and 3 (cubic spline interpolation). The default value is 1.

`extrap_char` controls how the simulator evaluates a point that is outside the region of sample points included in the data file. The `C` (clamp) extrapolation method uses a horizontal line that passes through the nearest sample point, also called the end point, to extend the model evaluation. The `L` (linear) extrapolation method, which is the default method, models the extrapolation through a tangent line at the end point. The `S` (spline) extrapolation method uses the polynomial for the nearest segment (the segment at the end) to evaluate a point beyond the interpolation area. The `E` (error) extrapolation method issues a warning when the point to be evaluated is beyond the interpolation area.

You can specify the extrapolation method to be used for each end of the sample point region. When you do not specify an `extrap_char` value, the linear extrapolation method is used for both ends. When you specify only one `extrap_char` value, the specified extrapolation method is used for both ends. When you specify two `extrap_char` values, the first character specifies the extrapolation method for the end with the smaller coordinate value, and the second character specifies the method for the end with the larger coordinate value.

`dependent_selector` enables you to select the dependent column in the table that needs to be interpolated. Multiple dependent variables are supported. For example, in the table control string '`I,1L;3`', `3` is the dependent selector. This means that:

- the first column will be ignored
- the second column will be the only dimension and the dimension will be linear interpolated and linear extrapolated
- the third, fourth, and fifth columns are the dependent variables numbered 1, 2, and 3 respectively, and the third dependent variable (column 5) will be selected for interpolation.

You can use the `$table_model` function in the analog context (in an `analog` block) and in the digital context (such as in an `initial` or an `always` block). In the analog context, the `$table_model` function is subject to the same restrictions as analog operators with respect to where you can use the function. For more information, see "Restrictions on Using Analog Operators" on page 164.

© 2000-2015 All Rights Reserved.

Note: To use the `$table_model` function in a digital context, you must be using digital mixed-signal licensing or AMS Designer simulator licensing, according to the *Feature-to-License Checklist* in the *Virtuoso AMS Designer Simulator User Guide*.

See also

- Table Model File Format on page 154
- Example: Using the $table_model Function on page 156
- Example: Preparing Data in One-Dimensional Array Format on page 156
- Example: Using $table_model as a Built-In Digital System Task on page 157

Table Model File Format

The data in the table model file must be in the form of a family of ordered isolines. An *isoline* is a curve of at least two values generated when one variable is swept and all other variables are held constant. An *ordered isoline* is an isoline in which the sweeping variable is either monotonically increasing or monotonically decreasing. A *monotonically increasing* variable is one in which every subsequent value is equal to or greater than the previous value. A *monotonically decreasing* variable is one in which every subsequent value is equal to or less than the previous value.

For example, a bipolar transistor can be described by a family of isolines, where each isoline is generated by holding the base current constant and sweeping the collector voltage from 0 to some maximum voltage. If the collector voltage sweeps monotonically, the generated isoline is an ordered isoline. In this example, the collector voltage takes many values for each of the isolines so the voltage is the *fastest changing* independent variable and the base current is the *slowest changing* independent variable. You need to know the fastest changing and slowest changing independent variables to arrange the data correctly in the table model file.

The sample points are stored in the file in the following format:

P_1
P_2
P_3
...
P_M

where P_i (i = 1...M) are the sample points. Each sample point P_i is on a separate line and is represented as a sequence of numbers, X_{i1} X_{i2} ..X_{ik}... X_{iN} Y_i where N is the highest dimension of the model. X_{ik} is the coordinate of the sample point in the kth dimension, and Y_i is the model value at this point. X_{i1} (the leftmost variable) must be the slowest changing

© 2000-2015 All Rights Reserved.

variable and X_{iN} (the rightmost variable other than the model value) must be the fastest changing variable. The other variables must be arranged in between from slowest changing to fastest changing. Comments, which begin with `#`, can be inserted at any place in the file and can continue to the end of the line.

For example, to create a table model with three ordered isolines representing the function

$z = f(x,y) = x+y^2$

build the model as follows, assuming that you want to have four sample values on each isoline. The `y` values used here are all the same and equally spaced on each isoline, but they do not have to be.

Isoline 1: `x=1`

```
y = 1, 2, 3, 4
z = 2, 5, 10, 17
```

Isoline 2: `x=2`

```
y = 1, 2, 3, 4
z = 3, 6, 11, 18
```

Isoline 3: `x=3`

```
y = 1, 2, 3, 4
z = 4, 7, 12, 19
```

Finally, prefix each row with an index. The function will be specified to ignore this new column of data.

Enter the table model data into the file as follows:

```
# Indx is the index column to be ignored.
# x is the slowest changing independent variable.
# y is the fastest changing independent variable.
# z is the table model value at each point.
#  Indx   x   y   z
   1      1   1   2
   2      1   2   5
   3      1   3  10
   4      1   4  17
   5      2   1   3
   6      2   2   6
   7      2   3  11
   8      2   4  18
   9      3   1   4
   10     3   2   7
   11     3   3  12
   12     3   4  19
```


© 2000-2015 All Rights Reserved.

Example: Using the $table_model Function

For example, assume that you have a data file named `nmos.tbl`, which contains the data given above. You might use it in a module as follows:

```
`include "disciplines.vams"
`include "constants.vams"

module mynmos (g, d, s);
electrical g, d, s;
inout g, d, s;

analog begin
    I(d, s) <+ $table_model (V(g, s), V(d, s), "nmos.tbl", "I,3CL,3CL");
end

endmodule
```

In this example, the program ignores the first column of data. The independent variables are `V(g,s)` and `V(d,s)`. The degree of the splines that the program uses for interpolation is three for each of the two active dimensions. For each of these dimensions, the extrapolation method for the lower end is clamping and the extrapolation for the upper end is linear.

Example: Preparing Data in One-Dimensional Array Format

In this example, there are 18 sample points. Consequently, each of the one-dimensional arrays contains 18 bits. Each point has two independent variables, represented by *x* and *y*, and a value, represented by *f_xy*.

```
module measured_resistance (a, b);
electrical a, b;
inout a, b;
real x[0:17], y[0:17], f_xy[0:17];
analog begin
    @(initial_step) begin
        x[0]= -10; y[0]=-10; f_xy[0]=0; // 0th sample point
        x[1]= -10; y[1]=-8; f_xy[1]=-0.4; // 1st sample point
        x[2]= -10; y[2]=-6; f_xy[2]=-0.8; // 2nd sample point
        x[3]= -9; y[3]=-10; f_xy[3]=0.2;
        x[4]= -9; y[4]=-8; f_xy[4]=-0.2;
        x[5]= -9; y[5]=-6; f_xy[5]=-0.6;
        x[6]= -9; y[6]=-4; f_xy[6]=-1;
        x[7]= -8; y[7]=-10; f_xy[7]=0.4;
        x[8]= -8; y[8]=-9; f_xy[8]=0.2;
        x[9]= -8; y[9]=-7; f_xy[9]=-0.2;
        x[10]= -8; y[10]=-5; f_xy[10]=-0.6;
        x[11]= -8; y[11]=-3; f_xy[11]=-1;
        x[12]= -7; y[12]=-10; f_xy[12]=0.6;
        x[13]= -7; y[13]=-9; f_xy[13]=0.4;
        x[14]= -7; y[14]=-8; f_xy[14]=0.2;
        x[15]= -7; y[15]=-7; f_xy[15]=0;
        x[16]= -7; y[16]=-6; f_xy[16]=-0.2;
        x[17]= -7; y[17]=-5; f_xy[17]=-0.4;
    end
```


© 2000-2015 All Rights Reserved.

```
    I(a, b) <+ $table_model (V(a), V(b), x, y, f_xy, "3L,1L");
end
endmodule
```

Example: Using $table_model as a Built-In Digital System Task

You can use the `$table_model` function as a built-in digital system task in an `initial` or `always` block, such as:

```
module example(rout, rin1, rin2, clk);
wreal rout, rin1, rin2;
input rin1, rin2;
output rout;
wire clk;
input clk;

real out;

assign rout = out;

always @clk begin
    out = $table_model(rin1, rin2,"sample.dat");
end
endmodule
```


© 2000-2015 All Rights Reserved.

Node/Net Aliasing System Functions

You can use the `$analog_node_alias()` system function to alias a local node to a hierarchical node through a string reference within connect modules and regular modules. In addition, you can use the Cadence proprietary system function `$real_net_alias()` to alias a local net to a hierarchical net through a string reference within connect modules and regular modules.

Aliasing Local Nodes to Hierarchical Nodes with $analog_node_alias

Use the `$analog_node_alias` system function to alias a local node to a hierarchical node through a string reference within connect modules and regular modules.

```
analog_node_alias_system_function ::=
    $analog_node_alias ( analog_net_reference , hierarchical_reference_string )
```

`analog_net_reference` is a node that is declared in the module containing the system function call and can be either a scalar node or a vector continuous node. In case of vector node, it references the full vector node and cannot be a bit-select or part-select of the vector node. In addition, `analog_net_reference` cannot be a port or part of port connections.

`hierarchical_reference_string` can be a string literal or a string parameter containing hierarchical reference to the continuous node. `hierarchical_reference_string` cannot reference a node that is used as `analog_net_reference` in another `$analog_node_alias` system function.

The `$analog_node_alias` system function returns 1 if `hierarchical_reference_string` points to a valid continuous node and aliases the `analog_net_reference` to the hierarchical node.

The following rules determine whether a node is valid:

- `hierarchical_reference_string` refers to a scalar continuous node or a scalar element of a continuous vector node
- disciplines of `analog_net_reference` and the resolved hierarchical node reference are compatible
- the resolved hierarchical node's reference is a port

If the system function returns zero (0), the node referenced by `analog_net_reference` is treated as a normal continuous node declared in the module containing the system function call.

© 2000-2015 All Rights Reserved.

If a particular node is involved in multiple calls to the system function, then the last evaluated call takes precedence.

The `$analog_node_alias` system function can only be used within an `analog initial` block. In general, the `$analog_node_alias` system function cannot be used inside a conditional statement. However, it can be used in a conditional statement if the conditional expression controlling the statement consists of terms that do not change during the simulation.

The following is an example of the `$analog_node_alias` system function:

```
connectmodule elect_to_logic(el, cm);
    input el;
    output cm;
    reg cm;
    electrical el;
    ddiscrete cm;
    electrical vdd, vss;
    parameter string vddname = "(not_given)"; // Set via the CR
    parameter string vssname = "(not given)"; // Set via the CR

 analog initial begin
    if ($analog_node_alias(vdd, vddname) == 0)
       $display("Unable to resolve power supply: %s", vddname);
    if ($analog_node_alias(vss, vssname) == 0)
       $display("Unable to resolve ground: %s", vssname);
 end

 always @(cross(V(el) - V(vdd)/2.0, 1))
        cm = 1;
 always @(cross(V(el) - V(vdd)/2.0, -1))
        cm = 0;

 endmodule

connectmodule logic_to_elect(cm, el);
    input cm;
    output el;
    ddiscrete cm;
    electrical el;
    electrical vdd, vss;
    parameter string vddname = "(not_given)"; // Set via the CR
```


© 2000-2015 All Rights Reserved.

```
   parameter string vssname = "(not given)"; // Set via the CR

 analog initial begin
   if ($analog_node_alias(vdd, vddname) == 0)
      $error("Unable to resolve power supply: %s", vddname);
   if ($analog_node_alias(vss, vssname) == 0)
      $error("Unable to resolve ground: %s", vssname);
 end

 analog V(el) <+ V(vdd) * transition((cm == 1) ? 1 : 0);

endmodule
```

Aliasing Local Nets to Hierarchical Nets with $real_net_alias

Use the `$real_net_alias` Cadence proprietary system function to alias a local net to a hierarchical net through a string reference within connect modules and regular modules.

```
real_net_alias_system_function ::=
    $real_net_alias ( real_net_reference , hierarchical_reference_string )
```

`real_net_reference` is a net that is declared in the module containing the system function call and can be a local scalar or a vector wreal net. In addition, `real_net_reference` cannot be a bit-select or part-select of a vector net.

`hierarchical_reference_string` can be a string literal or a string parameter containing hierarchical reference to the wreal net. `hierarchical_reference_string` should refer to a scalar wreal net or a scalar element of a wreal net.

The `$real_net_alias` system function returns 1 if `hierarchical_reference_string` points to a valid discrete wreal net and returns zero (0) otherwise. If the return value is 1, then the `real_net_reference` is aliased to that hierarchical net. If the system function returns zero (0), then the net referenced by `real_net_reference` is treated as a normal local wreal net declared in the module containing the system function call.

If a particular net is involved in multiple calls to the system function, then the last evaluated call (in the module context) takes precedence.

The `$real_net_alias` system function can only be used in a digital block. You can use the `$real_net_alias` system function in both connect modules and Verilog-AMS modules.

The following example shows the usage of the `$real_net_alias` system function in a Verilog-AMS connect module:

```
module top;
```


© 2000-2015 All Rights Reserved.

```
    wreal a, b;
    reg r1, r2, r3, r4;
    foo f1();
    parameter string p = "top.f1.y";
    initial begin
        r1 = $real_net_alias(a, "top.f1.x");    // #1, valid, but this does not
                                                take effect because of #4 below
        if (r1) $display("top.f1.x is legal "); // #2, $display works
    end
    initial begin
        #0;
        $display("a = ", a);                    // #3, wreal net 'a' get assigned
                                                 at time zero
        #3;
        r2 = $real_net_alias(a, p);             // #4, this is the last valid func-
                                                 call for 'a'
        $display("a = ", a,,r2,,top.f1.y,,b);   // #5
        #3;
        r3 = $real_net_alias(a, "top.f1.no");   // #6, invalid, this function call
                                                 does not work, r3 = 0
        r4 = $real_net_alias(b, "top.f1.y");    // #7, valid, this takes effect and
                                                result is shown in #5 above
    end
endmodule
module foo;
    wreal x, y;
    assign x = 1.11;
    assign y = 5.43;
endmodule

Simulation outputs:
top.f1.x is legal
a = 5.43
a = 5.43 1 5.43 5.43
```

The following example shows the usage of the `$real_net_alias` function in a dynamic supply connect module:

```
connectrules ddiscrete_dynsup_full_fast_cr;
    connect L2R_dynsup #(.vddname("top.f1.a"), .vssname("top.f1.x")) ;
    ......
endconnectrules
`timescale 1ns / 1ps
connectmodule L2R_dynsup(Rout, Lin);
```


© 2000-2015 All Rights Reserved.

```
   input Lin;
   output  Rout; wreal Rout;
   wreal vss, vdd;
   parameter string vddname = "(no value)";
   parameter string vssname = "(no value)";
   parameter real vsup_min=0.5 from (0:inf); // min supply for normal operation
   parameter real vlo = 0;                   // logic low voltage
   reg supOK;
   real L_conv, v_vdd, v_vss;
   initial begin
      L_conv = `wrealZState;
      v_vdd = $real_net_alias(vdd, vddname);
      v_vss = $real_net_alias(vss, vssname);
      if (!v_vss || !v_vdd) begin
       $display("==== Invalid Parameter(s) at %m: vddname=", vddname,,"vssname=",
vssname);
         $finish;
      end
      else
        $display("==== Valid Parameter(s) at %m: vddname=", vddname,,"vssname=",
vssname);
   end
   always begin
      if ( vdd - vss > vsup_min)
         supOK = 1'b1;
      else
         supOK = 1'b0;
      @(vdd, vss);
   end
   // Determine the value of L and convert to a real value
   always begin
      if ( supOK ) begin
         case (Lin)
          1'b0:
             L_conv = vss;
          1'b1:
            L_conv = vdd;
          1'bz:
            L_conv = `wrealZState;
          default:
            L_conv = `wrealXState;
```


© 2000-2015 All Rights Reserved.

```
        endcase
      end
     else
        L_conv = `wrealXState;
     @(Lin, supOK, vss, vdd);
   end
   // drive the converted value back onto the output R pin
   assign Rout = L_conv;
endmodule
```


© 2000-2015 All Rights Reserved.

Analog Operators

Analog operators are functions that operate on more than just the current value of their arguments. These functions maintain an internal state and produce a return value that is a function of an input expression, the arguments, and their internal state.

The analog operators are the

- Limited exponential function
- Time derivative operator
- Time integral operator
- Circular integrator operator
- Delay operator
- Transition filter
- Slew filter
- Laplace transform filters
- Z-transform filters

Restrictions on Using Analog Operators

Analog operators are subject to these restrictions:

- You can use analog operators inside an `if` or `case` construct only if the controlling conditional expression consists entirely of `genvar` expressions, literal numerical constants, parameters, or the `analysis` function.
- You cannot use analog operators in `repeat`, `while`, or `for` statements.
- You cannot use analog operators inside a function.
- You cannot use analog operators inside `initial` blocks, `always` blocks, or user-defined functions.
- You cannot specify a null argument in the argument list of an analog operator.

© 2000-2015 All Rights Reserved.

Limited Exponential Function

Use the limited exponential function to calculate the exponential of a real argument.

limexp(*expr* **)**

expr is a dynamic expression of type real.

The `limexp` function limits the iteration step size to improve convergence. `limexp` behaves like the `exp` function, except that using `limexp` to model semiconductor junctions generally results in dramatically improved convergence. For information on the `exp` function, see "Standard Mathematical Functions" on page 112.

The `limexp` function is subject to the restrictions listed in "Restrictions on Using Analog Operators" on page 164.

Time Derivative Operator

Use the time derivative operator to calculate the time derivative of an argument.

ddt(*input* [**,** *abstol* | *nature*] **)**

input is a dynamic expression.

abstol is a constant specifying the absolute tolerance that applies to the output of the `ddt` operator. Set *abstol* at the largest signal level that you consider negligible. In this release of Verilog-AMS, *abstol* is ignored.

nature is a nature from which the absolute tolerance is to be derived. In this release of Verilog-AMS, *nature* is ignored.

The time derivative operator is subject to the restrictions listed in "Restrictions on Using Analog Operators" on page 164.

In DC analyses, the `ddt` operator returns 0. To define a higher order derivative, you must use an internal node or signal. For example, a statement such as the following is illegal.

```
V(out) <+ ddt(ddt(V(in))) // ILLEGAL!
```

For an example illustrating how to define higher order derivatives correctly, see "Using Integration and Differentiation with Analog Signals" on page 45.

Note: You cannot output the result of the `ddt` operator using statements such as `$print`, `$strobe`, and `$fopen`. Instead, you can use an internal node to record the value, then output the value of the internal node.

© 2000-2015 All Rights Reserved.

Time Integral Operator

Use the time integral operator to calculate the time integral of an argument.

idt(*input* [**,** *ic* [**,** *assert* [**,** *abstol* | *nature*]]] **)**

input is a dynamic expression to be integrated.

ic is a dynamic expression specifying the initial condition.

assert is a dynamic integer-valued parameter. To reset the integration, set *assert* to a nonzero value.

abstol is a constant explicit absolute tolerance that applies to the input of the idt operator. Set *abstol* at the largest signal level that you consider negligible.

nature is a nature from which the absolute tolerance is to be derived.

The time integral operator is subject to the restrictions listed in "Restrictions on Using Analog Operators" on page 164.

The value returned by the idt operator during DC or AC analysis depends on which of the parameters you specify.

If you specify	Then idt returns
input	$\int_0^t x(\tau)\,d\tau$ The time-integral of x from 0 to t with the initial condition being computed in the DC analysis.
input, *ic*	$\int_0^t x(\tau)\,d\tau + ic$ The time-integral of x from 0 to t with initial condition ic. In DC or IC analyses, returns ic.
input, *ic*, *assert*	$\int_{t_0}^t x(\tau)\,d\tau + ic$ The time-integral of x from t_0 to t with initial condition ic. In DC or IC analyses, and when *assert* is nonzero, returns ic. t_0 is the time when *assert* last became 0.

© 2000-2015 All Rights Reserved.

If you specify	Then idt returns
input, *ic*, *assert*, *abstol*	$\int_{t_0}^{t} x(\tau)d\tau + ic$ The time-integral of *x* from t_0 to *t* with initial condition *ic*. In DC or IC analysis, and when *assert* is nonzero, returns *ic*. t_0 is the time when *assert* last became 0.
input, *ic*, *assert*, *nature*	$\int_{t_0}^{t} x(\tau)d\tau + ic$ The time-integral of *x* from t_0 to *t* with initial condition *ic*. In DC or IC analysis, and when *assert* is nonzero, returns *ic*. t_0 is the time when *assert* last became 0.

The initial condition forces the DC solution to the system. You must specify the initial condition, *ic*, unless you are using the `idt` operator in a system with feedback that forces *input* to zero. If you use a model in a feedback configuration, you can leave out the initial condition without any unexpected behavior during simulation. For example, an operational amplifier alone needs an initial condition, but the same amplifier with the right external feedback circuitry does not need that forced DC solution.

The following statement illustrates using `idt` with a specified initial condition.

```
V(out) <+ sin(2*`M_PI*(fc*$abstime + idt(gain*V(in),0))) ;
```

Circular Integrator Operator

Use the circular integrator operator to convert an expression argument into its indefinitely integrated form.

idtmod(*expr* [**,** *ic* [**,** *modulus* [**,** *offset* [**,** *abstol* | *nature*]]]] **)**

expr is the dynamic integrand or expression to be integrated.

ic is a dynamic initial condition. By default, the value of *ic* is zero.

modulus is a dynamic value at which the output of `idtmod` is reset. *modulus* must be a positive value equation. If you do not specify *modulus*, `idtmod` behaves like the `idt` operator and performs no limiting on the output of the integrator.

offset is a dynamic value added to the integration. The default is zero.

© 2000-2015 All Rights Reserved.

The *modulus* and *offset* parameters define the bounds of the integral. The output of the idtmod function always remains in the range

offset < idtmod_output < *offset+modulus*

abstol is a constant explicit absolute tolerance that applies to the input of the idtmod operator. Set *abstol* at the largest signal level that you consider negligible.

nature is a nature from which the absolute tolerance is to be derived.

The circular integrator operator is subject to the restrictions listed in "Restrictions on Using Analog Operators" on page 164.

The value returned by the idtmod operator depends on which parameters you specify.

If you specify	Then idtmod returns
expr	$x = \int_0^t \mathrm{expr}(\tau)\,d\tau$ The time-integral of *expr* from 0 to *t* with the initial condition being computed in the DC analysis. Returns *x*.
expr, *ic*	$x = \int_0^t \mathrm{expr}(\tau)\,d\tau + ic$ The time-integral of *expr* from 0 to *t* with initial condition *ic*. In DC or IC analysis, returns *ic*; otherwise, returns *x*.
expr, *ic*, *modulus*	$x = \int_0^t \mathrm{expr}(\tau)\,d\tau + ic$ where *x* = *n*modulus* + *k* *n* = ... -3, -2, -1, 0, 1, 2, 3 ... Returns *k* where 0 < *k* < *modulus*
expr, *ic*, *modulus*, *offset*	$x = \int_0^t \mathrm{expr}(\tau)\,d\tau + ic$ where *x* = *n*modulus* + *k* Returns *k* where *offset* < *k* < *offset* + *modulus*

© 2000-2015 All Rights Reserved.

If you specify	Then idtmod returns
expr, *ic*, *modulus*, *offset*, *abstol*	$x = \int_0^t \mathrm{expr}(\tau)\,d\tau + ic$ where $x = n*modulus + k$ Returns k where $offset < k < offset + modulus$
expr, *ic*, *modulus*, *offset*, *nature*	$x = \int_0^t \mathrm{expr}(\tau)\,d\tau + ic$ where $x = n*modulus + k$ Returns k where $offset < k < offset + modulus$

The initial condition forces the DC solution to the system. You must specify the initial condition, *ic*, unless you are using `idtmod` in a system with feedback that forces *expr* to zero. If you use a model in a feedback configuration, you can leave out the initial condition without any unexpected behavior during simulation.

Example

The circular integrator is useful in cases where the integral can get very large, such as in a voltage controlled oscillator (VCO). For example, you might use the following approach to generate arguments in the range [0,2π] for the sinusoid.

```
phase = idtmod(fc + gain*V(IN), 0, 1, 0); //Phase is in range [0,1].
V(OUT) <+ sin(2*PI*phase);
```

Derivative Operator

Use the `ddx` operator to access symbolically-computed partial derivatives of expressions in the analog block.

```
ddx (expr, potential_access_id (net_or_port_scalar_expr))
ddx (expr, flow_access_id (branch_id))
```

expr is a real or integer value expression. The derivative operator returns the partial derivative of this argument with respect to the unknown indicated by the second argument, with all other unknowns held constant and evaluated at the current operating point. If *expr* does not depend explicitly on the unknown, the derivative operator returns zero. The *expr* argument:

- Cannot be a dynamic expression, such as `ddx(ddt(...), ...)`

© 2000-2015 All Rights Reserved.

- Cannot be a nested expression, such as `ddx(ddx(...), ...)`
- Cannot include symbolically calculated expressions, such as `ddx(transition(...), ...)`
- Cannot include arrays, such as `ddx(a[0], ...)`
- Cannot contain unknown variables in the system of equations, such as `ddx(V(a), ...)`
- Cannot contain quantities that depend on other quantities, such as: `I(a,b)<+g*V(a,b); ddx(I(a,b), V(a))`

potential_access_id is the access operator for the potential of a scalar net or port.

net_or_port_scalar_expr is a scalar net or port.

flow_access_id is the access operator for the flow through a branch.

branch_id is the name of a branch.

The derivative operator is subject to the restrictions listed in "Restrictions on Using Analog Operators" on page 164.

Example

This example implements a voltage-controlled dependent current source. The names of the variables indicate the values of the partial derivatives: `+1`, `-1`, or `0`. These values (scaled by the parameter `k`) can be used in a Newton-Raphson solution.

```
module vccs(pout,nout,pin,nin);
    electrical pout, nout, pin, nin;
    inout pout, nout, pin, nin;
    parameter real k = 1.0;
    real vin, one, minusone, zero;
    analog begin
        vin = V(pin,nin);
        one = ddx(vin, V(pin));
        minusone = ddx(vin, V(nin));
        zero = ddx(vin, V(pout));
        I(pout,nout) <+ k * vin;
    end
endmodule
```

Delay Operator

Use the `absdelay` operator to delay the entire signal of a continuously valued waveform.

absdelay(*expr* **,** *time_delay* [**,** *max_delay*] **)**

© 2000-2015 All Rights Reserved.

expr is a dynamic expression to be delayed.

time_delay, a dynamic nonnegative value, is the length of the delay. If you specify *max_delay*, you can change the value of *time_delay* during a simulation, as long as the value remains in the range 0 < *time_delay* < *max_delay*. Typically *time_delay* is a constant but can also vary with time (when *max_delay* is defined).

max_delay is a constant nonnegative number greater than or equal to *time_delay*. You cannot change *max_delay* because the simulator ignores any attempted changes and continues to use the initial value.

For example, to delay an input voltage you might code

```
V(out) <+ absdelay(V(in), 5u) ;
```

The absdelay operator is subject to the restrictions listed in "Restrictions on Using Analog Operators" on page 164.

In DC and operating analyses, the absdelay operator returns the value of *expr* unchanged. In time-domain analyses, the absdelay operator introduces a transport delay equal to the instantaneous value of *time_delay* based on the following formula.

```
Output(t) = Input(max(t-time_delay, 0))
```

Transition Filter

Use the transition filter to smooth piecewise constant waveforms, such as digital logic waveforms. The transition filter returns a real number that over time describes a piecewise linear waveform. The transition filter also causes the simulator to place time points at both corners of a transition to assure that each transition is adequately resolved.

transition(*input* [**,** *delay* [**,** *rise_time* [**,** *fall_time* [**,** *time_tol*]]]]**)**

input is a dynamic input expression that describes a piecewise constant waveform. It must have a real value. In DC analysis, the transition filter simply returns the value of *input*. Changes in *input* do not have an effect on the output value until *delay* seconds have passed.

delay is a dynamic nonnegative real value that is an initial delay. By default, *delay* has a value of zero.

rise_time is a dynamic positive real value specifying the time over which you want positive transitions to occur. If you do not specify *rise_time* or if you give *rise_time* a value of 0, *rise_time* defaults to the value defined by `default_transition.

fall_time is a dynamic positive real number specifying the time over which you want negative transitions to occur. By default, *fall_time* has the same value that *rise_time*

© 2000-2015 All Rights Reserved.

has. If you do not specify *rise_time* or if you give *rise_time* a value of 0, *fall_time* defaults to the value defined by `'default_transition`.

time_tol is a constant expression with a positive value. This option requires the simulator to place time points no more than the value of *time_tol* away from the two corners of the transition.

If `'default_transition` is not specified, the default behavior of the `transition` filter approximates the ideal behavior of a zero-duration transition.

The `transition` filter is subject to the restrictions listed in "Restrictions on Using Analog Operators" on page 164.

With the `transition` filter, you can control transitions between discrete signal levels by setting the rise time and fall time of signal transitions. The `transition` filter stretches instantaneous changes in signals over a finite amount of time, as shown below, and can also delay the transitions.

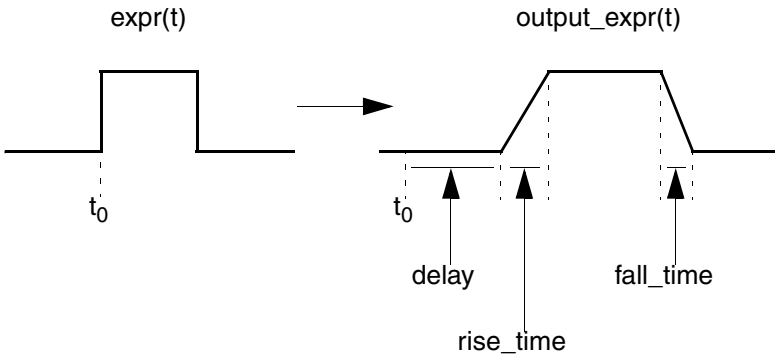

Use short transitions with caution because they can cause the simulator to slow down to meet accuracy constraints.

The next code fragment demonstrates how the `transition` filter might be used.

```
// comparator model
analog begin
    if ( V(in) > 0 ) begin
        Vout = 5 ;
        end
    else begin
        Vout = 0 ;
    end
    V(out) <+ transition(Vout) ;
end
```


© 2000-2015 All Rights Reserved.

Caution

The `transition` filter is designed to smooth out piecewise constant waveforms. If you apply the `transition` filter to smoothly varying waveforms, the simulator might run slowly, and the results will probably be unsatisfactory. For smoothly varying waveforms, consider using the `slew` filter instead. For information, see "Slew Filter" ***on page 175.***

If interrupted on a rising transition, the `transition` filter adjusts the slope so that at the revised end of the transition the value is that of the new destination.

If the new destination value is *below* **the value at the point of interruption, the** `transition` **filter**	**If the new destination value is** *above* **the value at the point of interruption, the** `transition` **filter**
1. Uses the value of the original destination as the value of the new origin. **2.** Adjusts the slope of the transition to the rate at which the value would decay from the value of the new origin to the value of the new destination in `fall_time` seconds. **3.** Causes the value of the filter output to decay at the new slope, from the value at the point of interruption to the value at the new destination.	**1.** Retains the original origin. **2.** Adjusts the slope of the transition to the rate at which the value would increase from the value of the origin to the value of the new destination in `rise_time` seconds. **3.** Causes the value of the filter output to increase at the new slope, from the value at the point of interruption to the value at the new destination.

In the following example, a rising transition is interrupted when it is about three fourths complete, and the value of the new destination is below the value at the point of interruption. The `transition` filter computes the slope that would complete a transition from the new origin (not the value at the point of interruption) in the specified *`fall_time`*. The

© 2000-2015 All Rights Reserved.

`transition` filter then uses the computed slope to transition from the current value to the new destination.

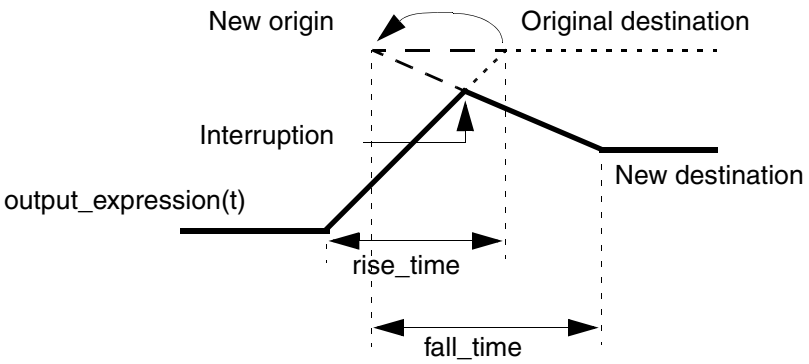

An interruption in a falling transition causes the transition filter to behave in an equivalent manner.

With larger delays, it is possible for a new transition to be specified before a previously specified transition starts. The `transition` filter handles this by deleting any transitions that would follow a newly scheduled transition. A `transition` filter can have an arbitrary number of transitions pending. You can use a `transition` filter in this way to implement the transport delay of discretely valued signals.

The following example implements a D-type flip flop. The `transition` filter smooths the output waveforms.

```
module d_ff(vin_d, vclk, vout_q, vout_qbar) ;
input vclk, vin_d ;
output vout_q, vout_qbar ;
electrical vout_q, vout_qbar, vclk, vin_d ;
parameter real vlogic_high = 5 ;
parameter real vlogic_low = 0 ;
parameter real vtrans_clk = 2.5 ;
parameter real vtrans = 2.5 ;
parameter real tdel = 3u from [0:inf) ;
parameter real trise = 1u from (0:inf) ;
parameter real tfall = 1u from (0:inf) ;

integer x ;

analog begin
    @ (cross( V(vclk) - vtrans_clk, +1 )) x = (V(vin_d) > vtrans) ;
    V(vout_q) <+ transition( vlogic_high*x + vlogic_low*!x,tdel, trise, tfall );
    V(vout_qbar) <+ transition( vlogic_high*!x + vlogic_low*x, tdel,
                                                    trise, tfall ) ;
    end

endmodule
```

The following example illustrates a use of the `transition` filter that should be avoided. The expression is dependent on a continuous signal and, as a consequence, the filter runs slowly.

```
I(p, n) <+ transition(V(p, n)/out1, tdel, trise, tfall);     // Do not do this.
```


© 2000-2015 All Rights Reserved.

However, you can use the following approach to implement the same behavior in a statement that runs much faster.

```
I(p, n) <+ V(p, n) * transition(1/out1, tdel, trise, tfall); // Do this instead.
```

Slew Filter

Use the `slew` filter to control the rate of change of a waveform. A typical use for `slew` is generating continuous signals from piecewise continuous signals. For discrete signals, consider using the `transition` filter instead. See "Transition Filter" on page 171 for more information.

slew(*input* [**,** *max_pos_rate* [**,** *max_neg_rate*]] **)**

input is a dynamic expression with a real value. In DC analysis, the `slew` filter simply returns the value of *input*.

max_pos_rate is a dynamic real number greater than zero, which is the maximum positive slew rate.

max_neg_rate is a dynamic real number less than zero, which is the maximum negative slew rate.

If you specify only one rate, its absolute value is used for both rates. If you give no rates, slew passes the signal through unchanged. If the rate of change of *input* is less than the specified maximum slew rates, `slew` returns the value of *input*.

The `slew` filter is subject to the restrictions listed in "Restrictions on Using Analog Operators" on page 164.

When applied, `slew` forces all transitions of *expr* faster than *max_pos_rate* to change at the *max_pos_rate* rate for positive transitions and limits negative transitions to the *max_neg_rate* rate.

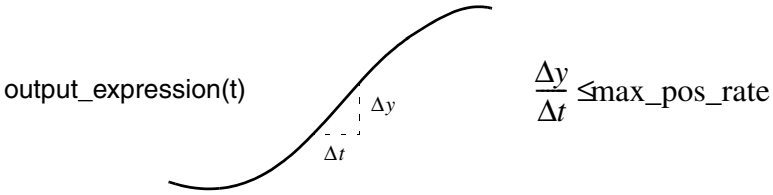

The `slew` filter is particularly valuable for controlling the rate of change of sinusoidal waveforms. The `transition` function distorts such signals, whereas `slew` preserves the general shape of the waveform. The following 4-bit digital-to-analog converter uses the `slew` function to control the rate of change of the analog signal at its output.

© 2000-2015 All Rights Reserved.

```
module dac4(d, out) ;
input [0:3] d ;
inout out ;
electrical [0:3] d ;
electrical out ;
parameter real slewrate = 0.1e6 from (0:inf) ;

    real Ti ;
    real Vref ;
    real scale_fact ;

    analog begin
        Ti = 0 ;
        Vref = 1.0 ;
        scale_fact = 2 ;
        generate ii (3,0,-1) begin
            Ti = Ti + ((V(d[ii]) > 2.5) ? (1.0/scale_fact) : 0);
            scale_fact = scale_fact/2 ;
        end
        V(out) <+ slew( Ti*Vref, slewrate ) ;
    end
endmodule
```

Implementing Laplace Transform S-Domain Filters

The Laplace transform filters implement lumped linear continuous-time filters. Each filter accepts an optional absolute tolerance parameter ε, which this release of Verilog-AMS ignores. The set of array values that are used to define the poles and zeros, or numerator and denominator, of a filter the first time it is used during an analysis are used at all subsequent time points of the analysis. As a result, changing array values during an analysis has no effect on the filter.

The Laplace transform filters are subject to the restrictions listed in "Restrictions on Using Analog Operators" on page 164. However, while most analog functions can be used, with certain restrictions, in `if` or `case` constructs, the Laplace transform filters cannot be used in `if` or `case` constructs in any circumstances.

Arguments Represented as Vectors

If you use an argument represented as a vector to define a numerator in a Laplace filter, and if one or more of the elements in the vector are 0, the order of the numerator is determined by the *position* of the rightmost non-zero vector element. For example, in the following module, the order of the numerator, `nn`, is 1

```
module test(pin, nin, pout, nout);
electrical pin, nin, pout, nout;

real nn[0:2];
real dd[0:2];

analog begin
    @(initial_step) begin
        nn[0] = 1;// The highest order non-zero coefficient of the numerator.
```


© 2000-2015 All Rights Reserved.

```
        nn[1] = 0;
        nn[2] = 0;
        dd[0] = 1;
        dd[1] = 1;
        dd[2] = 1;
    end
    V(pout, nout) <+ laplace_nd(V(pin,nin), nn, dd);
end
endmodule
```

Arguments Represented as Arrays

If you use an argument represented as an array constant to define a numerator in a Laplace filter, and if one or more of the elements in the array constant are 0, the order of the numerator is determined by the *position* of the rightmost non-zero array element. For example, if your numerator array constant is {1,0,0}, the order of the numerator is 1. If your array constant is {1,0,1}, the order of the numerator is 3. In the following example, the numerator order is 1 (and the value is 1).

```
module test(pin, nin, pout, nout);
electrical pin, nin, pout, nout;

analog begin
    V(pout, nout) <+ laplace_nd(V(pin,nin), {1,0,0}, {1,1,1});
end
endmodule
```

Array literals used for the Laplace transforms can also take the form that uses a back tic. For example,

```
V(out) <+ laplace_nd(`{5,6},`{7.8,9.0});
```

Zero-Pole Laplace Transforms

Use `laplace_zp` to implement the zero-pole form of the Laplace transform filter.

laplace_zp(*expr***,** ζ**,** ρ [**,** ε] **)**

ζ (zeta) is a fixed-sized vector of M pairs of real numbers. Each pair represents a zero. The first number in the pair is the real part of the zero, and the second is the imaginary part. ρ (rho) is a fixed-sized vector of N real pairs, one for each pole. Specify the poles in the same manner as the zeros. If you use array literals to define the ζ and ρ vectors, the values must be constant or dependent upon parameters only. You cannot use array literal values defined by variables.

The transfer function is

© 2000-2015 All Rights Reserved.

$$H(s) = \frac{\prod_{k=0}^{M-1}\left(1 - \frac{s}{\zeta_k^r + j\zeta_k^i}\right)}{\prod_{k=0}^{N-1}\left(1 - \frac{s}{\rho_k^r + j\rho_k^i}\right)}$$

where ζ_k^r and ζ_k^i are the real and imaginary parts of the kth zero, and ρ_k^r and ρ_k^i are the real and imaginary parts of the kth pole.

If a root (a pole or zero) is real, you must specify the imaginary part as 0. If a root is complex, its conjugate must be present. If a root is zero, the term associated with it is implemented as s rather than $(1 - s/\ r)$, where *r* is the root. If the list of roots is empty, unity is used for the corresponding denominator or numerator.

Zero-Denominator Laplace Transforms

Use `laplace_zd` to implement the zero-denominator form of the Laplace transform filter.

laplace_zd(*expr***,** ζ**,** d [**,** ε] **)**

ζ (zeta) is a fixed-sized vector of M pairs of real numbers. Each pair represents a zero. The first number in the pair is the real part of the zero, and the second is the imaginary part. d is a fixed-sized vector of N real numbers that contains the coefficients of the denominator. If you use array literals to define the ζ and d vectors, the values must be constant or dependent upon parameters only. You cannot use array literal values defined by variables.

The transfer function is

$$H(s) = \frac{\prod_{k=0}^{M-1}\left(1 - \frac{s}{\zeta_k^r + j\zeta_k^i}\right)}{\sum_{k=0}^{N-1} d_k s^k}$$

where ζ_k^r and ζ_k^i are the real and imaginary parts of the kth zero, and d_k is the coefficient of the kth power of s in the denominator. If a zero is real, you must specify the imaginary part as 0. If a zero is complex, its conjugate must be present. If a zero is zero, the term associated with it is implemented as s rather than $(1 - s/\ \zeta)$.

© 2000-2015 All Rights Reserved.

Numerator-Pole Laplace Transforms

Use `laplace_np` to implement the numerator-pole form of the Laplace transform filter.

laplace_np(*expr, n*, ρ [, ε] **)**

n is a fixed-sized vector of M real numbers that contains the coefficients of the numerator. ρ (rho) is a fixed-sized vector of N pairs of real numbers. Each pair represents a pole. The first number in the pair is the real part of the pole, and the second is the imaginary part. If you use array literals to define the *n* and ρ vectors, the array values must be constant or dependent upon parameters only. You cannot use array values defined by variables.

The transfer function is

$$H(s) = \frac{\sum_{k=0}^{M-1} n_k s^k}{\prod_{k=0}^{N-1} \left(1 - \frac{s}{\rho_k^r + j\rho_k^i}\right)}$$

where n_k is the coefficient of the kth power of s in the numerator, and ρ_k^r and ρ_k^i are the real and imaginary parts of the kth pole. If a pole is real, you must specify the imaginary part as 0. If a pole is complex, its conjugate must be present. If a pole is zero, the term associated with it is implemented as s rather than $(1 - s/\rho)$.

Numerator-Denominator Laplace Transforms

Use `laplace_nd` to implement the numerator-denominator form of the Laplace transform filter.

laplace_nd(*expr, n, d*[, ε] **)**

n is a fixed-sized vector of M real numbers that contains the coefficients of the numerator, and *d* is a fixed-sized vector of N real numbers that contains the coefficients of the denominator. If you use array literals to define the *n* and *d* vectors, the values must be constant or dependent upon parameters only. You cannot use array values defined by variables.

The transfer function is

© 2000-2015 All Rights Reserved.

$$H(s) = \frac{\sum_{k=0}^{M} n_k s^k}{\sum_{k=0}^{N} d_k s^k}$$

where n_k is the coefficient of the kth power of s in the numerator, and d_k is the coefficient of the kth power of s in the denominator.

Examples

The following code fragments illustrate how to use the Laplace transform filters.

```
V(out) <+ laplace_zp(V(in), {0,0}, {1,2,1,-2});
```

implements

$$H(s) = \frac{s}{\left(1 - \frac{s}{1+2j}\right)\left(1 - \frac{s}{1-2j}\right)} = \frac{s}{1 - 0.4s + 0.2s^2}$$

The code fragment

```
V(out) <+ laplace_nd(V(in), {0,1}, {1,-0.4,0.2});
```

is equivalent.

The following statement contains an empty vector such that the middle argument is null:

```
V(out) <+ laplace_zp(V(in), , {-1,0});
```

The absence of zeros, indicated by the null argument, means that the transfer function reduces to the following equation:

$$H(s) = \frac{1}{1+s}$$

The next module illustrates the use of array literals that depend on parameters. In this code, the array literal `{dx,6*dx,5*dx}` depends on the value of the parameter `dx`.

```
module svcvs_zd(pin, nin, pout, nout);
electrical pin, nin, pout, nout;
parameter real nx = 0.5;
parameter integer dx = 1;
```


© 2000-2015 All Rights Reserved.

```
analog begin
    V(pout,nout) <+ laplace_zd(V(pin,nin),{0-nx,0},{dx,6*dx,5*dx});
end
endmodule
```

The next fragment illustrates an efficient way to initialize array values. Because only the initial set of array values used by a filter has any effect, this example shows how you can use the `initial_step` event to set values at the beginning of the specified analyses.

```
real nn[0:1] ;
real dd[0:2] ;

analog begin
    @(initial_step("static")) begin
        nn[0] = 1 ;            // These assignment
        nn[1] = 2 ;            // statements run only
        dd[0] = 1 ;            // at the beginning of
        dd[1] = 6 ;            // the analyses.
    end
    V(pout, nout) <+ laplace_nd(V(pin,nin), nn, dd) ;
end
```

When you use this technique, be sure to initialize the arrays at the beginning of each analysis that uses the filter.The `static` analysis is the dc operating point calculation required by most analyses, including `tran`, `ac`, and `noise`. Initializing the array during the `static` phase ensures that the array is non-zero as these analyses proceed.

The next modules illustrate how you can use an array variable to avoid error messages about using array literals with variable dependencies in the Laplace filters. The first version causes an error message.

```
// This version does not work.
`include "constants.vams"
`include "disciplines.vams"

module laplace(out, in);
inout in, out;
electrical in, out;
real dummy;

    analog begin
        dummy = -0.5;
        V(out) <+  laplace_zd(V(in), [dummy,0], [1,6,5]);   //Illegal!
    end
endmodule
```

The next version works as expected.

```
// This version works correctly.
`include "constants.vams"
`include "disciplines.vams"

module laplace(out, in);
inout in, out;
electrical in, out;
real dummy;

real nn[0:1];
```


© 2000-2015 All Rights Reserved.

```
analog begin
    dummy = -0.5;
    @(initial_step) begin     // Defines the array variable.
        nn[0] = dummy;
        nn[1] = 0;
    end

    V(out) <+  laplace_zd(V(in), nn, [1,6,5]);
end
endmodule
```

Implementing Z-Transform Filters

The Z-transform filters implement linear discrete-time filters. Each filter requires you to specify a parameter T, the sampling period of the filter. A filter with unity transfer function acts like a simple sample-and-hold that samples every T seconds.

All Z-transform filters share three common arguments, T, τ, and t_0. The T argument specifies the period of the filter and must be positive. τ specifies the transition time and must be nonnegative. If you specify a nonzero transition time, the simulator controls the time step to accurately resolve both the leading and trailing corner of the transition. If you do not specify a transition time, τ defaults to one unit of time as defined by the `` `default_transition `` compiler directive. If you specify a transition time of 0, the output is abruptly discontinuous. Avoid assigning a Z-filter with 0 transition time directly to a branch because doing so greatly slows the simulation. Finally, t_0 specifies the time of the first sample/transition and is also optional. If not given, the first transition occurs at t=0.

The values of T and t_0 at the first time point in the analysis are stored, and those stored values are used at all subsequent time points. The array values used to define a filter are used at all subsequent time points, so changing array values during an analysis has no effect on the filter.

The Z-transform filters are subject to the restrictions listed in "Restrictions on Using Analog Operators" on page 164.

Zero-Pole Z-Transforms

Use `zi_zp` to implement the zero-pole form of the Z-transform filter.

zi_zp(expr**,** ζ**,** ρ**,** T [**,** τ [**,** t_0]]**)**

ζ (zeta) is a fixed or parameter-sized vector of M pairs of real numbers. Each pair represents a zero. The first number in the pair is the real part of the zero, and the second is the imaginary part. ρ (rho) is a fixed or parameter-sized vector of N real pairs, one for each pole. The poles are given in the same manner as the zeros. If you use array literals to define the ζ and ρ vectors, the values must be constant or dependent upon parameters only. You cannot use array values defined by variables.

© 2000-2015 All Rights Reserved.

The transfer function is

$$H(z) = \frac{\prod_{k=0}^{M-1}\left(1 - z^{-1}(\zeta_k^r + j\zeta_k^i)\right)}{\prod_{k=0}^{N-1}\left(1 - z^{-1}(\rho_k^r + j\rho_k^i)\right)}$$

where ζ_k^r and ζ_k^i are the real and imaginary parts of the kth zero, and ρ_k^r and ρ_k^i are the real and imaginary parts of the kth pole. If a root (a pole or zero) is real, you must specify the imaginary part as 0. If a root is complex, its conjugate must also be present. If a root is the origin, the term associated with it is implemented as *z* rather than $(1 - (z^{-1} \cdot r))$, where *r* is the root. If a list of poles or zeros is empty, unity is used for the corresponding denominator or numerator.

Zero-Denominator Z-Transforms

Use `zi_zd` to implement the zero-denominator form of the Z-transform filter.

zi_zd(*expr***,** ζ**,** d**,** T [**,** τ [**,** t_0]]**)**

ζ (zeta) is a fixed or parameter-sized vector of M pairs of real numbers. Each pair represents a zero. The first number in the pair is the real part of the zero, and the second is the imaginary part. d is a fixed or parameter-sized vector of N real numbers that contains the coefficients of the denominator. If you use array literals to define the ζ and d vectors, the values must be constant or dependent upon parameters only. You cannot use array values defined by variables.

The transfer function is

$$H(z) = \frac{\prod_{k=0}^{M-1}\left(1 - z^{-1}(\zeta_k^r + j\zeta_k^i)\right)}{\sum_{k=0}^{N-1} d_k z^{-k}}$$

where ζ_k^r and ζ_k^i are the real and imaginary parts of the kth zero, and d_k is the coefficient of the kth power of *z* in the denominator. If a zero is real, you must specify the imaginary part

© 2000-2015 All Rights Reserved.

as 0. If a zero is complex, its conjugate must also be present. If a zero is the origin, the term associated with it is implemented as *z* rather than $(1-(z^{-1}\cdot\zeta))$.

Numerator-Pole Z-Transforms

Use `zi_np` to implement the numerator-pole form of the Z-transform filter.

zi_np(*expr, n*, ρ, *T* [, τ [, t_0]])

n is a fixed or parameter-sized vector of M real numbers that contains the coefficients of the numerator. ρ (rho) is a fixed or parameter-sized vector of N pairs of real numbers. Each pair represents a pole. The first number in the pair is the real part of the pole, and the second is the imaginary part. If you use array literals to define the n and ρ vectors, the values must be constant or dependent upon parameters only. You cannot use array values defined by variables.

The transfer function is

$$H(z) = \frac{\sum_{k=0}^{M-1} n_k z^{-k}}{\prod_{k=0}^{N-1}\left(1 - z^{-1}(\rho_k^r + j\rho_k^i)\right)}$$

where n_k is the coefficient of the kth power of *z* in the numerator, and ρ_k^r and ρ_k^i are the real and imaginary parts of the kth pole. If a pole is real, the imaginary part must be specified as 0. If a pole is complex, its conjugate must also be present. If a pole is the origin, the term associated with it is implemented as *z* rather than $(1-z^{-1}\rho)$.

Numerator-Denominator Z-Transforms

Use `zi_nd` to implement the numerator-denominator form of the Z-transform filter.

zi_nd(*expr, n, d, T* [, τ [, t_0]])

n is a fixed or parameter-sized vector of M real numbers that contains the coefficients of the numerator, and d is a fixed or parameter-sized vector of N real numbers that contains the coefficients of the denominator. If you use array literals to define the n and d vectors, the values must be constant or dependent upon parameters only. You cannot use array values defined by variables.

The transfer function is

© 2000-2015 All Rights Reserved.

$$H(z) = \frac{\sum_{k=0}^{M-1} n_k z^{-k}}{\sum_{k=0}^{N-1} d_k z^{-k}}$$

where n_k is the coefficient of the kth power of z in the numerator, and d_k is the coefficient of the kth power of *s* in the denominator.

Examples

The following example illustrates an ideal sampled data integrator with the transfer function

$$H(z) = \frac{1}{1 - z^{-1}}$$

This transfer function can be implemented as

```
module ideal_int (in, out) ;
electrical in, out ;
parameter real T = 0.1m ;
parameter real tt = 0.02n ;
parameter real td = 0.04m ;

analog begin
    // The filter is defined with constant array literals.
    V(out) <+ zi_nd(V(in), {1}, {1,-1}, T, tt, td) ;
end
endmodule
```

The next example illustrates additional ways to use parameters and arrays to define filters.

```
module zi (in, out);
electrical in, out;

parameter real T = 0.1;
parameter real tt = 0.02m;
parameter real td = 0.04m;
parameter real n0 = 1;

parameter integer start_num = 0;
parameter integer num_d = 2;

real nn[0:0];                           // Fixed-sized array
real dd[start_num:start_num+num_d-1];   // Parameter-sized array
real d;

analog begin

    // The arrays are initialized at the beginning of the listed analyses.
```


© 2000-2015 All Rights Reserved.

```
    @(initial_step("ac","dc","tran")) begin
        d = 1*n0;
        nn[start_num] = n0;
        dd[start_num] = d; dd[1] = -d;
    end

    V(out) <+ zi_nd( V(in), nn, dd, T, tt, td);
end
endmodule
```

Displaying Results

Verilog-AMS provides these tasks for displaying information: `$strobe`, `$display`, `$monitor`, `$write`, and `$debug`.

$strobe

Use the `$strobe` task to display information on the screen. `$strobe` and `$display` use the same arguments and are completely interchangeable. `$strobe` is supported in both analog and digital contexts.

```
strobe_task ::=
        $strobe [ ( { list_of_arguments } ) ]

list_of_arguments ::=
        argument
    |   list_of_arguments , argument
```

The `$strobe` task prints a new-line character after the final argument. A `$strobe` task without any arguments prints only a new-line character.

Each *`argument`* is a quoted string or an expression that returns a value.

Each quoted string is a set of ordinary characters, special characters, or conversion specifications, all enclosed in one set of quotation marks. Each conversion specification in the string must have a corresponding argument following the string. You must ensure that the type of each argument is appropriate for the corresponding conversion specification.

You can specify an argument without a corresponding conversion specification. If you do, an integer argument is displayed using the `%d` format, and a real argument is displayed using the `%g` format.

© 2000-2015 All Rights Reserved.

Special Characters

Use the following sequences to include the specified characters and information in a quoted string.

Use this sequence	To include
`\n`	The new-line character
`\t`	The tab character
`\\`	The backslash character, \
`\"`	The quotation mark character, "
`\ddd`	A character specified by 1 to 3 octal digits
`%%`	The percent character, %
`%m` or `%M`	The hierarchical name of the current module, function, or named block

Conversion Specifications

Conversion specifications have the form

% [*flag*] [*field_width*] [**.** *precision*] *format_character*

where *flag*, *field_width*, and *precision* can be used only with a real argument.

flag is one of the three choices shown in the table:

flag	Meaning
-	Left justify the output
+	Always print a sign
Blank space, or any character other than a sign	Print a space

field_width is an integer specifying the minimum width for the field.

precision is an integer specifying the number of digits to the right of the decimal point.

© 2000-2015 All Rights Reserved.

format_character is one of the following characters.

format_ character	Type of Argument	Output	Example Output
b or B		Binary format	00000000000000000000000000111000
c or C	Integer	ASCII character format	
d or D	Integer	Decimal format	191, 48, -567
e or E	Real	Real, exponential format	-1.0, 4e8, 34.349e-12
f or F	Real	Real, fixed-point format	191.04, -4.789
g or G	Real	Real, exponential, or decimal format, whichever format results in the shortest printed output	9.6001, 7.34E-8, -23.1E6
h or H	Integer	Hexadecimal format	3e, 262, a38, fff, 3E, A38
o or O	Integer	Octal format	127, 777
r or R	Real	Engineering notation format	123,457M, 12.345K
s or S	String constant	String format	

Examples of $strobe Formatting

Assume that module `format_module` is instantiated in a netlist file with the instantiation

```
formatTest format_module
```

The module is defined as

```
module format_module ;
integer ival ;
real rval ;
analog begin
    ival = 98 ;
    rval = 123.456789 ;
    $strobe("Format c gives %c" , ival) ;
    $strobe("Format C gives %C" , ival) ;
    $strobe("Format d gives %d" , ival) ;
    $strobe("Format D gives %D" , ival) ;
    $strobe("Format e (real) gives %e" , rval) ;
    $strobe("Format E (real) gives %E" , rval) ;
```


© 2000-2015 All Rights Reserved.

```
    $strobe("Format f (real) gives %f" , rval) ;
    $strobe("Format F (real) gives %F" , rval) ;
    $strobe("Format g (real)gives %g" , rval) ;
    $strobe("Format G (real)gives %G" , rval) ;
    $strobe("Format h gives %h" , ival) ;
    $strobe("Format H gives %H" , ival) ;
    $strobe("Format m gives %m") ;
    $strobe("Format M gives %M") ;
    $strobe("Format o gives %o" , ival) ;
    $strobe("Format O gives %O" , ival) ;
    $strobe("Format s gives %s" , "s string") ;
    $strobe("Format S gives %S" , "S string") ;
    $strobe("newline,\ntab,\tback-slash, \\") ;
    $strobe("doublequote,\"") ;
end

endmodule
```

When you run `format_module`, it displays

```
Format c gives b
Format C gives b
Format d gives 98
Format D gives 98
Format e gives 1.234568e+02
Format E gives 1.234568e+02
Format f gives 123.456789
Format F gives 123.456789
Format g gives 123.457
Format G gives 123.457
Format h gives 62
Format H gives 62
Format m gives formatTest
Format M gives formatTest
Format o gives 142
Format O gives 142
Format s gives s string
Format S gives S string
newline,
tab,    back-slash, \
doublequote,"
```

$display

Use the `$display` task to display information on the screen. `$display` is supported in both analog and digital contexts.

```
display_task ::=
        $display [ ( { list_of_arguments } ) ]

list_of_arguments ::=
        argument
    |   list_of_arguments , argument
```

`$display` and `$strobe` use the same arguments and are completely interchangeable. For guidance, see "$strobe" on page 186.

© 2000-2015 All Rights Reserved.

$write

Use the `$write` task to display information on the screen. This task is identical to the `$strobe` task, except that `$strobe` automatically adds a newline character to the end of its output, whereas `$write` does not. `$write` is supported in both analog and digital contexts.

```
write_task ::=
        $write [ ( { list_of_arguments } ) ]

list_of_arguments ::=
        argument
    |   list_of_arguments , argument
```

The arguments you can use in `list_of_arguments` are the same as those used for `$strobe`. For guidance, see "$strobe" on page 186.

$debug

Use the `$debug` task to display information on the screen while the analog solver is running. This task displays the values of the arguments for each iteration of the solver.

```
debug_task ::=
        $debug [ ( { list_of_arguments } ) ]

list_of_arguments ::=
        argument
    |   list_of_arguments , argument
```

The arguments you can use in `list_of_arguments` are the same as those used for `$strobe`. For guidance, see "$strobe" on page 186.

$monitor

Use the `$monitor` task to display information on the screen. This task is identical to the `$strobe` task, except that `$monitor` outputs only when an argument changes value.`$monitor` is supported in only digital contexts.

```
$monitor_task ::=
        $monitor [ ( { list_of_arguments } ) ]

list_of_arguments ::=
        argument
    |   list_of_arguments , argument
```

The arguments you can use in `list_of_arguments` are the same as those used for `$strobe`. For guidance, see "$strobe" on page 186.

© 2000-2015 All Rights Reserved.

Specifying Power Consumption

Use the `$pwr` system task to specify the power consumption of a module. The `$pwr` task is supported in only analog contexts.

Note: The `$pwr` task is a nonstandard Cadence-specific language extension.

```
pwr_task ::=
        $pwr( expression )
```

`expression` is an expression that specifies the power contribution. If you specify more than one `$pwr` task in a behavioral description, the result of the `$pwr` task is the sum of the individual contributions.

To ensure a useful result, your module must contain an assignment inside the behavior specification. Your module must also compute the value of `$pwr` tasks at every iteration. If these conditions are not met, the result of the `$pwr` task is zero.

The `$pwr` task does not return a value and cannot be used inside other expressions. Instead, access the result by using the `options` and `save` statements in the analog simulation control file. For example, using the following statement in the analog simulation control file saves all the individual power contributions and the sum of the contributions in the module named *`name`*:

```
name options pwr=all
```

For `save`, use a statement like the following:

```
save name:pwr
```

In each format, *`name`* is the name of a module.

For more information about the `options` statement, see Chapter 7 of the *Spectre Circuit Simulator User Guide*. For more about the `save` statement, see Chapter 8 of the *Spectre Circuit Simulator User Guide.*

Example

```
// Resistor with power contribution
`include "disciplines.vams"

module Res(pos, neg);
inout pos, neg;
electrical pos, neg;
parameter real r=5;
    analog begin
        V(pos,neg) <+ r * I(pos,neg);
        $pwr(V(pos,neg)*I(pos,neg));
    end
endmodule
```


© 2000-2015 All Rights Reserved.

Working with Files

Verilog-AMS provides several functions for working with files. `$fopen` prepares a file for writing. `$fstrobe` and `$fdisplay` write to a file. `$fclose` closes an open file.

Opening a File

Use the `$fopen` function to open a specified file.

```
fopen_function ::=
        multi_channel_descriptor = $fopen ( "file_name" [ "io_mode"] ) ;
    |   fd = $fopen ( "file_name", type ) ;

type ::=
        "r"
    |   "w"
    |   "a"
```

`multi_channel_descriptor` is a 32-bit unsigned integer that is uniquely associated with *`file_name`*. The `$fopen` function returns a *`multi_channel_descriptor`* value of zero if the file cannot be opened.

Think of *`multi_channel_descriptor`* as a set of 32 flags, where each flag represents a single output channel. The least significant bit always refers to the standard output. The first time it is called, `$fopen` opens channel 1 and returns a descriptor value of 2 (binary 10). The second time it is called, `$fopen` opens channel 2 and returns a descriptor value of 4 (binary 100). Subsequent calls cause `$fopen` to open channels 3, 4, 5, and so on, and to return values of 8, 16, 32, and so on, up to a maximum of 32 open channels.

`io_mode` is one of three possible values: `w`, `a`, or `r`. The `w` or write mode deletes the contents of any existing files before writing to them. The `a` or append mode appends the next output to the existing contents of the specified file. In both cases, if the specified file does not exist, `$fopen` creates that file. The `r` mode opens a file for reading. An error is reported if the file does not exist.

The `$fopen` function reuses channels associated with any files that are closed.

`file_name` is a string that can include the special commands described in "Special $fopen Formatting Commands" on page 193. If *`file_name`* contains a path indicating that the file is to be opened in a different directory, the directory must already exist when the `$fopen` function runs. *`file_name`* (together with the surrounding quotation marks) can also be replaced by a string parameter.

`type` (allowed in `initial` or `always` blocks, but not in `analog` blocks) is a character string or a reg that indicates how the file is to be opened. The value `"r"` opens the file for reading,

© 2000-2015 All Rights Reserved.

`"w"` truncates the file to zero length or creates the file for writing, `"a"` opens the file for appending, or creates the file for writing.

For example, to open a file named `myfile`, you can use the code

```
integer myChanDesc ;
myChanDesc = $fopen ( "myfile" ) ;
```

Special $fopen Formatting Commands

The following special output formatting commands are available for use with the `$fopen` function.

Command	Output	Example
`%C`	Design filename	`input.scs`
`%D`	Date (yy-mm-dd)	`94-02-28`
`%H`	Host name	`hal`
`%S`	Simulator type	`spectre`
`%P`	Unix process ID #	`3641`
`%T`	Time (24hh:mm:ss)	`15:19:25`
`%I`	Instance name	`opamp3`
`%A`	Analysis name	`dc0p`, `timeDomain`, `acSup`

The special output formatting commands can be followed by one or more modifiers, which extract information from UNIX filenames. (To avoid opening a file that is already open, the `%C` command must be followed by a modifier.) The modifiers are:

Modifier	Extracted information
`:r`	Root (base name) of the path for the file
`:e`	Extension of the path for the file
`:h`	Head of the path for any portion of the file before the last /
`:t`	Tail of the path for any portion of the file after the last /
`::`	The (:) character itself

© 2000-2015 All Rights Reserved.

Any other character after a colon (`:`) signals the end of modifications. That character is copied with the previous colon.

The modifiers are typically used with the `%C` command although they can be used with any of the commands. However, when the output of a formatting command does not contain a `/` and ".", the modifiers `:t` and `:r` return the whole name and the `:e` and `:h` modifiers return ".". As a result, be aware that using modifiers with formatting commands other than `%C` might not produce the results you expect. For example, using the command

```
$fopen("%I:h.freq_dat") ;
```

opens a file named `..freq_dat`.

You can use a concatenated sequence of modifiers. For example, if your design file name is `res.ckt`, and you use the statement

```
$fopen("%C:r.freq_dat") ;
```

then

- `%C` is the design filename (`res.ckt`)
- `:r` is the root of the design filename (`res`)
- `.freq_dat` is the new filename extension

As a result, the name of the opened file is `res.freq_dat`.

The following table shows the various filenames generated from a design filename (`%C`) of

```
/users/maxwell/circuits/opamp.ckt
```

by using different formatting commands and modifiers.

Command and Modifiers	Resulting Opened File
`$fopen("%C");`	None, because the design file cannot be overwritten.
`$fopen("%C:r");`	`/users/maxwell/circuits/opamp`
`$fopen("%C:e");`	`ckt`
`$fopen("%C:h");`	`/users/maxwell/circuits`
`$fopen("%C:t");`	`opamp.ckt`
`$fopen("%C::");`	`/users/maxwell/circuits/opamp.ckt:`
`$fopen("%C:h:h");`	`/users/maxwell`
`$fopen("%C:t:r");`	`opamp`

© 2000-2015 All Rights Reserved.

Command and Modifiers	Resulting Opened File
`$fopen("%C:r:t");`	`opamp`
`$fopen("/tmp/%C:t:r.raw");`	`/tmp/opamp.raw`
`$fopen("%C:e%C:r:t");`	`ckt.opamp`
`$fopen("%C:r.%I.dat" );`	`/users/maxwell/circuits/ opamp.opamp3.dat`

Reading from a File

Use the `$fscanf` and `$fgets` functions to read information from a file.

$fscanf

Use the `$fscanf` function to read information from a file.

```
fscanf_function ::=
        $fscanf (multi_channel_descriptor , "format" { , storage_arg } )
```

The *`multi_channel_descriptor`* that you specify must have a value that is associated with one or more currently open files. The format describes the matching operation done between the `$fscanf` storage arguments and the input from the data file. The `$fscanf` function sequentially attempts to match each formatting command in this string to the input coming from the file. After the formatting command is matched to the characters from the input stream, the next formatting command is applied to the next input coming from the file. If a formatting command is not a skipping command, the data read from the file to match a formatting command is stored in the formatting command's corresponding *`storage_arg`*. The first *`storage_arg`* corresponds to the first nonskipping formatting command; the second *`storage_arg`* corresponds to the second nonskipping formatting command. This matching process is repeated between all formatting commands and input data. The formatting commands that you can use are the same as those used for `$strobe`. See "$strobe" on page 186 for guidance.

For example, the following statement reads data from the file designated by `fptr1` and places the information in variables called `db1` and `int`.

```
$fscanf(fptr1, "Double = %e and Integer = %d", dbl, int);
```

$fgets

Use the `$fgets` function to read the characters from a file, until a newline character or End of File (EOF) condition is encountered, and store the information in a string variable.

© 2000-2015 All Rights Reserved.

```
fgets_function ::=
        $fgets ( "str" { , [ multi_channel_descriptor ] } )
```

The *multi_channel_descriptor* that you specify must have a value that is associated with the currently open file. If an error occurs while reading the file, the function returns zero, otherwise, it returns the number of characters it reads from the file.

Writing to a File

Verilog-AMS provides three input/output functions for writing to a file: `$fstrobe`, `$fdisplay`, `$fwrite`, `$fmonitor`, `$fdebug`. The `$fstrobe` and `$fdisplay` functions use the same arguments and are completely interchangeable. The `$fwrite` function is similar but does not insert automatic carriage returns in the output.

$fstrobe

Use the `$fstrobe` function to write information to a file.

```
fstrobe_function ::=
        $fstrobe (multi_channel_descriptor {,list_of_arguments })
list_of_arguments ::=
        argument
    |   list_of_arguments , argument
```

The *multi_channel_descriptor* that you specify must have a value that is associated with one or more currently open files. The arguments that you can use in `list_of_arguments` are the same as those used for `$strobe`. See "$strobe" on page 186 for guidance.

For example, the following code fragment illustrates how you might write simultaneously to two open files.

```
integer mcd1 ;
integer mcd2 ;
integer mcd ;
@(initial_step) begin
    mcd1 = $fopen("file1.dat") ;
    mcd2 = $fopen("file2.dat") ;
end
.
.
.
mcd = mcd1 | mcd2 ; // Bitwise OR combines two channels
$fstrobe(mcd, "This is written to both files") ;
```

$fdisplay

Use the `$fdisplay` function to write information to a file.

© 2000-2015 All Rights Reserved.

```
fdisplay_function ::=
        $fdisplay (multi_channel_descriptor {,list_of_arguments })
list_of_arguments ::=
        argument
    |   list_of_arguments , argument
```

The *multi_channel_descriptor* that you specify must have a value that is associated with a currently open file. The arguments that you can use in `list_of_arguments` are the same as those used for `$strobe`. See "$strobe" on page 186 for guidance.

$fwrite

Use the `$fwrite` function to write information to a file.

```
fwrite_function ::=
        $fwrite (multi_channel_descriptor {,list_of_arguments })
list_of_arguments ::=
        argument
    |   list_of_arguments , argument
```

The *multi_channel_descriptor* that you specify must have a value that is associated with a currently open file. The arguments that you can use in `list_of_arguments` are the same as those used for `$strobe`. See "$strobe" on page 186 for guidance.

The `$fwrite` function does not insert automatic carriage returns in the output.

$fmonitor

The `$fmonitor` function is similar to $monitor. However, it prints the values of variables or expressions that are specified as an argument to the task to a specified file.

```
fmonitor_function ::=
        $fmonitor ( multi_channel_descriptor {,list_of_arguments })
list_of_arguments ::=
        argument
    |   list_of_arguments , argument
```

The *multi_channel_descriptor* that you specify must have a value that is associated with a currently open file.

$fdebug

The `$fdebug` function is similar to $debug. However, it prints the information to a file.

```
fdebug_function ::=
        $fdebug ( multi_channel_descriptor {,list_of_arguments })
```


© 2000-2015 All Rights Reserved.

```
list_of_arguments ::=
        argument
    |   list_of_arguments , argument
```

The *multi_channel_descriptor* that you specify must have a value that is associated with the currently open file.

$ferror

```
ferror_function ::=
    $ferror (multi_channel_descriptor ,argument )
```

Use the `$ferror` function to write the error information generated by the current input/output function to a string variable.

The function also returns an integral value of the error code. If no error is generated by the input/output function, the `$ferror` function returns zero and the string variable does not contain anything.

Finding the File Position

$ftell

Use the `$ftell` function to return the offset value from the beginning of a file.

```
ftell_function ::=
        $ftell ( multi_channel_descriptor ) ;
```

The offset value can be used by the `$fseek` function to reposition the file.

The *multi_channel_descriptor* that you specify must have a value that is associated with the currently opened file.

$fseek

Use the `$fseek` function to set the position of the next input or output operation on a file.

```
fseek_function ::=
    $fseek ( multi_channel_descriptor, offset_value, opearation_value) ;
```

The new postion depends on the value specified for `operation_value` and can be any of the following:

0 – sets the position equal to `offset_value`

© 2000-2015 All Rights Reserved.

1 – sets the position to the current location after adding `offset_value`

2 – sets the position to End of File (EOF) after adding `offset_value`

The `$fseek` function can be used to position the file pointer to any position in the file, however, when data is written to the file, the file pointer is ignored and the output is written at the end of the file and the file pointer is automatically positioned at the end of the output.

If an error occurs while repositioning the file, the function returns -1, otherwise, it returns 0.

$rewind

Use the `$rewind` function to set the position of the next input or output operation on a file.

```
rewind_function ::=
    $rewind ( multi_channel_descriptor) ;
```

Note: `$rewind` is equivalent to `$fseek (multi_channel_descriptor, 0, 0)`

Closing a File

Use the `$fclose` function to close a specified file.

```
file_close_function ::=
        $fclose ( multi_channel_descriptor ) ;
```

The *`multi_channel_descriptor`* that you specify must have a value that is associated with the currently open file that you want to close.

Simulator Control Functions

Verilog-AMS provides the following simulator control functions:

- $finish on page 200
- $stop on page 201
- $fatal on page 201
- $error on page 202
- $warning on page 202
- $info on page 202

© 2000-2015 All Rights Reserved.

Note: For simulation tools, the `$fatal`, `$error`, `$warning`, and `$info` functions also report the simulation run time at which the function is called. You can also use these functions to include additional information using the same format as the `$display` function.

$finish

If the `$finish` function is called during an accepted iteration, the simulator exits after the current solution is complete and returns the control to the operating system. `$finish` called during a rejected iteration has no effect.

```
finish_function ::=
        $finish [( msg_level )] ;

msg_level ::=
        0 | 1 | 2
```

The `msg_level` value determines which diagnostic messages print before control returns to the operating system. The default `msg_level` value is 1.

msg_level	Messages printed
0	None
1	Simulation time and location
2	Simulation time, location, and statistics about the memory and CPU time used in the simulation

Note: In this release, the `$finish` function always behaves as though the `msg_level` value is `0`, regardless of the value you actually use.

If the `$finish` function is called from an `analog initial` block, the simulator does not perform any simulation and exits with a message. In addition, when a simulation exits due to `$finish`, all appropriate `final_step` blocks are triggered.

For example, to make the simulator exit, you might code

```
$finish ;
```

$finish_current_analysis

Use the `$finish_current_analysis` function to stop the current transient analysis without exiting the simulator. The `$finish_current_analysis` enables you to stop the ongoing transient analysis and continue to run the remaining analysis. The syntax of `$finish_current_analysis` is the following:

© 2000-2015 All Rights Reserved.

```
finish_function ::=
$finish_current_analysis [( msg_level )] ;
msg_level ::=
        0 | 1 | 2
```

where `msg_level` value works exactly the same way as it does in the `$finish` function.

Note: The `$finish_current_analysis` can be used to stop only the transient analysis and not any other analysis type.

$stop

The `$stop` function is treated the same as the `$finish` function.

```
stop_function ::=
        $stop [( msg_level )] ;
msg_level ::=
        0 | 1 | 2
```

Note: In this release, the `$stop` function always behaves as though the `msg_level` value is 0, regardless of the value you actually use. In addition, the `$stop` function cannot be used within an analog initial block.

$fatal

Use the `$fatal` function to generate a runtime fatal error message and make the simulator exit with an error code. The first argument to the `$fatal` function is the same as the `$finish` function and identifies which diagnostic message should the simulator print before exiting.

```
fatal_function ::=
        $fatal [ ( msg_level [ , message_argument { , message_argument } ] ) ] ;

msg_level ::=
    0 | 1 | 2
```

msg_level	Messages printed
0	None
1	Simulation time and location
2	Simulation time, location, and statistics about the memory and CPU time used in the simulation

© 2000-2015 All Rights Reserved.

If you call the `$fatal` function from an `analog initial` block, the initialization is aborted after the message is generated and the simulation exits.

Note: Currently, the `$fatal` function, like the `$finish` function, behaves as though `msg_level` is `0` regardless of the value that you specify for `msg_level`.

$error

Use the `$error` function to generate a runtime error message.

```
error_function ::=
              $error [ ( [ message_argument { , message_argument } ] ) ] ;
```

If you call the `$error` function from an `analog initial` block, the initialization continues after the message is generated.

$warning

Use the `$warning` function to generate a runtime warning message, which can be suppressed by the simulator.

```
warning_function ::=
              $warning [ ( [ message_argument { , message_argument } ] ) ] ;
```

If you call the `$warning` function from an `analog initial` block, the initialization and simulation is not affected.

$info

Use the `$info` function to generate an informational message that does not include any severity.

```
info_function ::=
              $info [ ( [ message_argument { , message_argument } ] ) ] ;
```

If you call the `$info` function from an `analog initial` block, the initialization and simulation is not affected.

Note: The `$fatal`, `$error`, `$warning`, and `$info` functions also report the simulation run time at which the severity system task is called. In addition, you can use these functions to include additional information using the same format as the `$display` function.

© 2000-2015 All Rights Reserved.

Non-fatal system severity functions (`$error`, `$warning`, and `$info`) called during a rejected iteration do not have any effect. `$fatal` ends the simulation without checking whether the iteration should be rejected.

Entering Interactive Tcl Mode

Use the `$stop` function to make the simulator enter interactive mode and display a Tcl prompt.

```
stop_function ::=
        $stop [( msg_level )] ;

msg_level ::=
        0 | 1 | 2
```

The `msg_level` value determines which diagnostic messages print before the simulator starts the interactive mode. The default `msg_level` value is 1.

msg_level	Messages printed
0	None
1	Simulation time and location
2	Simulation time, location, and statistics about the memory and CPU time used in the simulation

For example, to make the simulator go interactive, you might code

```
$stop ;
```

User-Defined Functions

Verilog-AMS supports user-defined functions. By defining and using your own functions, you can simplify your code and enhance readability and reuse. Each function can be a digital function (as defined in *IEEE 1364-1995 Verilog HDL*) or an analog function.

Declaring an Analog User-Defined Function

To define an analog function, use this syntax:

```
analog_function_declaration ::=
        analog function [ type ] function_identifier ;
        function_item_declaration {function_item_declaration}
```


© 2000-2015 All Rights Reserved.

```
        statement
        endfunction
type ::=
        integer
    |   real
function_item_declaration ::=
        input_declaration
    |   block_item_declaration
block_item_declaration ::=
        integer_declaration
    |   real_declaration
```

`type` is the type of the value returned by the function. The default value is `real`.

`statement` cannot include analog operators and cannot define module behavior. Specifically, *`statement`* cannot include

- `ddt` operator
- `idt` operator
- `idtmod` operator
- Access functions
- Contribution statements
- Event control statements
- Simulator library functions, except that you can include the functions in the next list

`statement` can include references to

- `$vt`
- `$vt(`*`temp`*`)`
- `$temperature`
- `$realtime`
- `$abstime`
- `analysis`
- `$strobe`
- `$display`
- `$write`
- `$fopen`

© 2000-2015 All Rights Reserved.

- `$fstrobe`
- `$fdisplay`
- `$fwrite`
- `$fclose`
- All mathematical functions

You can declare local variables to be used in the function.

Each function you define must have at least one declared input. Each function must also assign a value to the implicitly defined internal variable with the same name as the function.

For example,

```
analog function real chopper ;
    input sw, in ; // The function has two declared inputs.
    real sw, in ;
//The next line assigns a value to the implicit variable, chopper.
    chopper = ((sw > 0) ? in : -in) ;
endfunction
```

The `chopper` function takes two variables, `sw` and `in`, and returns a real result. You can use the function in any subsequent function definition or in the module definition.

Calling a User-Defined Analog Function

To call a user-defined analog function, use the following syntax.

```
analog_function_call ::=
        function_identifier ( expression { , expression } )
```

`function_identifier` must be the name of a defined function. Each *`expression`* is evaluated by the simulator before the function runs. However, do not rely on having expressions evaluated in a certain order because the simulator is allowed to evaluate them in any order.

An analog function must not call itself, either directly or indirectly, because recursive functions are illegal. Analog function calls are allowed only inside of analog blocks.

The module `phase_detector` illustrates how the `chopper` function can be called.

```
module phase_detector(lo, rf, if0) ;
inout lo, rf, if0 ;
electrical lo, rf, if0 ;
parameter real gain = 1 ;

    function real chopper;
        input sw, in;
        real sw, in;
```


© 2000-2015 All Rights Reserved.

```
        chopper = ((sw > 0) ? in : -in);
    endfunction

analog
    V(if0) <+ gain * chopper(V(lo),V(rf));  //Call from within the analog block.
endmodule
```


© 2000-2015 All Rights Reserved.

10

Instantiating Modules and Primitives

Chapter 2, “Creating Modules,” discusses the basic structure of Cadence® Verilog®-AMS language modules. This chapter discusses how to instantiate Verilog-AMS modules within other modules. Module declarations cannot nest in one another; instead, you embed instances of modules in other modules. By embedding instances, you build a hierarchy extending from the instances of primitive modules up through the top-level modules.

The following sections discuss

- Instantiating Verilog-AMS Modules on page 208
- Connecting the Ports of Module Instances on page 211
- Overriding Parameter Values in Instances on page 213
- Instantiating Analog Primitives on page 216
- Using an M Factor (Multiplicity Factor) on page 218
- Including Verilog-A Modules in Spectre Subcircuits on page 220

© 2000-2015 All Rights Reserved.

Instantiating Verilog-AMS Modules

Use the following syntax to instantiate modules in other modules.

```
module_instantiation ::=
    module_id [ parameter_value_assignment ] instance_list

instance_list ::=
    module_instance { , module_instance} ;

module_instance ::=
    name_of_instance ( [ list_of_module_connections ] )

name_of_instance ::=
    module_instance_identifier [ constant_range ]

list_of_module_connections ::=
    ordered_port_connection { , ordered_port_connection }
   |named_port_connection { , named_port_connection }

ordered_port_connection ::=
    [ net_expression ]

named_port_connection ::=
    . port_identifier ( [ net_expression ] )

net_expression ::=
    net_identifier
   |net_identifier [ constant_expression ]
   |net_identifier [ constant_range ]

constant_range ::=
        constant_expression : constant_expression
```

The `instance_list` expression is discussed in the following sections. The `parameter_value_assignment` expression is discussed in "Overriding Parameter Values in Instances" on page 213.

Creating and Naming Instances

This section illustrates how to instantiate modules. Consider the following module, which describes a gain block that doubles the input voltage.

```
module vdoubler (in, out) ;
input in ;
output out ;
electrical in, out ;
analog
    V(out) <+ 2.0 * V(in) ;
endmodule
```

Two of these gain blocks are connected, with the output of the first becoming the input of the second. The schematic looks like this.

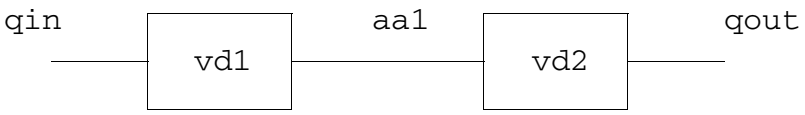

© 2000-2015
All Rights Reserved.

This higher-level component is described by module `vquad`, which creates two instances, named `vd1` and `vd2`, of module `vdoubler`. Module `vquad` also defines external ports corresponding to those shown in the schematic.

```
module vquad (qin, qout) ;
input qin ;
output qout ;
electrical qin, qout ;
wire aa1 ;
vdoubler vd1 (qin, aa1) ;
vdoubler vd2 (aa1, qout) ;
endmodule
```

Creating Arrays of Instances

The range specification on the *`module_instance_identifier`* allows you to create arrays of instances.

```
name_of_instance ::=
        module_instance_identifier [ constant_range ]
```

However, a *`module_instance_identifier`* used to create an array of instances (an *`AOI_identifier`*) is restricted to being purely digital and cannot instantiate an analog object at any level. That means that you cannot use:

- An analog primitive or a connection module as the *`AOI_identifier`*.
- Inherited connection attributes, m-factor attributes, or dynamic parameters in the *`AOI_identifier`*.

In addition, you cannot use a VHDL design unit as the *`AOI_identifier`*.

You cannot connect to the *`AOI_identifier`* a net or bus that is declared to be analog. Nets or buses of undetermined discipline are forced to the default discipline when they connect to an *`AOI_identifier`*.

When you use both the `ncelab -dresolution` and `-messages` options, the elaborator notifies you when it encounters an array of instances. Regardless of the number of arrays of instances in the design, the elaborator produces only a single message. For example, you define the following modules.

```
/* Digital module instance array */
module pmem();
   wire [15:0]   xxpab,pab;
   nmos #0.06 npab[15:0] (xxpab,pab,1'b1);
endmodule

/* Instantiate both digital and analog modules */
module tmp ();
   pmem pmem();
   ana ana();
endmodule
```


© 2000-2015 All Rights Reserved.

```
/* Analog module */
module ana();
   electrical v;
   real vValue;
   initial begin
           vValue = 0.1;
           #100;
           vValue = 1.5;
   end
   analog begin
           V(v) <+ vValue;
   end
endmodule
```

When you run `ncelab` with both the `-dresolution` and `-messages` options, the following message is produced.

```
nmos #0.06 npab[15:0] (xxpab,pab,1'b1);
              |
ncelab: *W,AMSAOIW (./test.v,10|14): An array of instances was encountered in the
AMS design. Only pure digital array of instance hierarchies are allowed in AMS
designs.
```

Mapping Instance Ports to Module Ports

When you instantiate a module, you must specify how the actual ports listed in the instance correspond to the formal ports listed in the defining module. Module `vquad`, in the previous example, demonstrates one of the two methods provided in Verilog-AMS. Module `vquad` uses an ordered list, where instance `vd1`'s first actual port name `qin` maps to `vdoubler`'s first formal port name `in`. Instance `vd1`'s second actual port name `aa1` maps to `vdoubler`'s second formal port name, and so on.

You can also map actual ports to the formal ports in the defining module explicitly, using name pairs. If you choose this approach, the order of the ports does not matter.

You cannot mix the two kinds of mapping within a single instance.

Mapping Ports with Ordered Lists

To use ordered lists to map actual ports listed in the instance to the formal ports listed in the defining module, ensure that the instance ports are in the same order as the defining module ports. For example, consider the following module `child` and the module `instantiator` that instantiates it.

```
module child (ina, inb, out) ;
input [0:3] ina ;
input inb ;
output out ;
electrical [0:3] ina ;
electrical inb ;
```


© 2000-2015 All Rights Reserved.

```
electrical out ;
endmodule

module instantiator (conin, conout) ;
input [0:6] conin ;
output conout ;
electrical [0:6] conin ;
electrical conout ;
child child1 (conin [1:4], conin [6], conout) ;
end module
```

You can tell from the order of port names in these modules that port `ina[0]` in module `child` maps to port `conin[1]` in instance `child1`. Similarly, port `inb` in `child` maps to port `conin[6]` in instance `child1`. Port `out` in `child` maps to port `conout` in instance `child1`.

Mapping Ports with Name Pairs

You can also link the formal ports in a defining module and the actual ports in an instance explicitly by pairing the port names. A period and the formal port name come first in each pair, followed, in parentheses, by the actual port name used in the instance. For example, in this module instantiation statement,

```
adc2 low (.in(rem_chain), .out(bout[1]), .outb()) ;
```

the formal names `in`, `out`, and `outb`, are from the defining module, and the actual names `rem_chain` and `bout[1]` are used in the instantiating module. The empty set of parentheses adjacent to `outb` show that the `outb` port is not used in this instance.

Ensure that the first name in each pair is a name specified on the `module` statement of the defining module. Then ensure that the second name, the actual one used in the instance and in the instantiating module, is one of the following:

- A simple net identifier
- A scalar member of a vector net or port declared within the instantiating module
- A sub-range of a vector net declared within the instantiating module

Connecting the Ports of Module Instances

Developing modules that describe components is an important step on the way to the overall goal of simulating a system. But an equally important step is combining those components together so that they represent the system as a whole. This section discusses how to connect module instances, using their ports, to describe the structure and behavior of the system you are modeling.

© 2000-2015 All Rights Reserved.

Consider again the modules `vdoubler` and `vquad`, which describe this schematic.

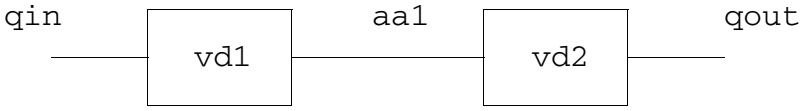


```
module vdoubler (in, out) ;
input in ;
output out ;
electrical in, out ;
analog
    V(out) <+ 2.0 * V(in) ;
endmodule
```

```
module vquad (qin, qout) ;
input qin ;
output qout ;
electrical qin, qout ;
wire aa1 ;
vdoubler vd1 (qin, aa1) ;
vdoubler vd2 (aa1, qout) ;
endmodule
```

This time, note how the module instantiation statements in `vquad` use port names to establish a connection between output port `aa1` of instance `vd1` and input port `aa1` of instance `vd2`.

You can establish the same connections by using name pairs, as illustrated in the following two instantiation statements

```
vdoubler vd1 (.out (aa1), .in (qin)) ;
vdoubler vd2 (.in (aa1), .out (qout)) ;
```

Module instantiation statements like

```
vdoubler vd1 (qin, qout) ;
vdoubler vd2 (qin, qout) ;
```

establish different connections. These statements describe a system where the gain blocks are connected in parallel, with this schematic.

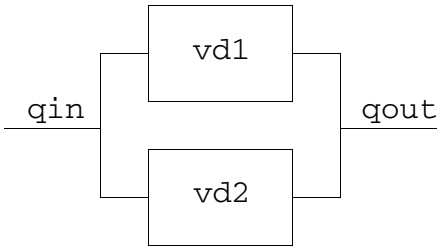

© 2000-2015
All Rights Reserved.

Port Connection Rules

You can connect the ports described in the `vdoubler` instances because the ports are all analog, are defined with compatible disciplines, and are the same size. To generalize,

- All analog ports connected to a net are compatible with each other. You can connect both analog and digital ports to the same net if you provide appropriate `connect` statements.
- You must ensure that the sizes of connected ports and nets match. In other words, you can connect a scalar port to a scalar net, and a vector port to a vector net or concatenated net expression of the same width.

Overriding Parameter Values in Instances

The syntax for the module instance statement is

```
module_id [ parameter_value_assignment ] instance_list
```

The following sections discuss the `parameter_value_assignment` expression, which is further defined as

```
parameter_value_assignment ::=
        #( ordered_param_override_list )
    |   #( named_param_override_list )

ordered_param_override_list ::=
        expression { , expression }

named_param_override_list ::=
        named_param_override { , named_param_override }

named_param_override ::=
        . parameter_identifier ( expression )
```

By default, instances of modules inherit any parameters specified in their defining module. If you want to change any of the default parameter values, you can do so on the module instantiation statement itself, or from other modules and instances by using the `defparam` statement. The `defparam` statement is particularly useful if you want to change parameters throughout your modules from a single location.

Overriding Parameter Values from the Instantiation Statement

Using the module instantiation statement, you can assign values to parameters in two ways. You can assign values in the order the parameters are declared, or you can assign values by explicitly referring to parameter names. The new values must be constant expressions.

© 2000-2015 All Rights Reserved.

Overriding Parameter Values with Ordered Lists

To override parameters using an ordered list of replacement values you must ensure that the list specifies replacement values in the same order that the parameters are defined in the defining module. You are not required to specify replacement values for every defined parameter, but if you omit any value you must omit every value from then on. In other words, you cannot skip over selected parameters. If a parameter does not need a new value, however, you can specify a replacement value equal to the default value.

Consider the two instances, `weakp` and `plainp`, instantiated within module `m`.

```
module m ;
voltage clk ;
electrical out_a, in_a ;
mosp # (2e-6, 1e-6) weakp (out_a, in_a, clk);//Overriding param values by order
mosp plainp (out_b, in_b, clk) ;
endmodule ;
```

The `weakp` module instantiation statement overrides the first two parameters given in the defining module, `mosp`, giving the first parameter the new value 2e-6 and the second parameter the value 1e-6. The `plainp` module instantiation statement has no parameter override expression, so the parameters assume their default values.

Overriding Parameter Values By Name

You can also override parameter values in an instantiated module by pairing the parameter names to be changed with the values they are to receive. A period and the parameter name come first in each pair, followed by the new value in parentheses. The parameter name must be the name of a parameter in the defining module of the module being instantiated. When you override parameter values by name, you are not required to specify values for every parameter.

Consider this modified definition of module `vdoubler`. This version has three parameters, `parm1`, `parm2`, and `parm3`.

```
module vdoubler (in, out) ;
input in ;
output out ;
electrical in, out ;
parameter parm1 = 0.2,
          parm2 = 0.1,
          parm3 = 5.0 ;
analog
    V(out) <+ (parm1 + parm2 + parm3) * V(in) ;
endmodule

module vquad (qin, qout) ;
input qin ;
output qout ;
vdoubler # (.parm3(4.0)) vd1 (qin, aa1) ;                // Overriding by name
vdoubler # (.parm1(0.3), .parm2(0.2)) vd2 (aa1, qout) ;  // Overriding by name
```


© 2000-2015 All Rights Reserved.

```
vdoubler # (0.3, 0.2) vd3 (aa1, qout) ;                    // By order
endmodule
```

The module instantiation statement for instance `vd1` overrides parameter `parm3` by name to specify that the value for `parm3` should be changed to 4.0. The other two parameters retain the default values 0.2 and 0.1. The module instantiation statement for `vd3` uses an ordered list to override the first two parameters, `parm1`, and `parm2`. Parameter `parm3` retains the default value 5.0.

Overriding Parameter Values Using defparam

Use the `defparam` statement to set parameter values in any module instance throughout the module hierarchy. With this capability, for example, you can group all your parameter override assignments together in a single module. The syntax is

defparam *param* **=** *constant_exp* { **,** *param* **=** *constant_exp* } **;**

param must be a complete hierarchical path for the parameter whose value you want to change in a module instance. *constant_exp* must be an expression involving only constant numbers and parameters that are defined in the same module containing the `defparam` statement.

For example, as the following code demonstrates, you could remove the parameter overrides from module `vquad` and put them in a new module, `annotate`.

```
module vdoubler (in, out) ;
input in ;
output out ;
electrical in, out ;
parameter parm1 = 0.2,
          parm2 = 0.1,
          parm3 = 5.0 ;
analog
    V (out) <+ (parm1 + parm2 + parm3) * V (in) ;
endmodule

module vquad (qin, qout) ;
input qin ;
output qout ;
vdoubler vd1 (qin, aa1) ;
vdoubler vd2 (aa1, qout) ;
endmodule

module annotate ;
defparam
        vquad.vd1.parm3 = 4.0,
        vquad.vd2.parm1 = 0.3,
        vquad.vd2.parm2 = 0.2;
endmodule
```


© 2000-2015 All Rights Reserved.

Precedence Rules for Overriding Parameter Values

Use the following rules to determine which parameter override takes precedence when a parameter value is overridden by more than one assignment.

- If overrides take place at different levels of the module hierarchy, the highest level override takes precedence.
- If overrides take place at the same level of the module hierarchy, an override done by the `defparam` statement takes precedence over overrides done by module instantiation statements.

```
ps #(.b(1.5) inst1 (in, out);
```

Instances of paramsets are allowed to override only parameters that are declared in the paramset. Using a paramset instance to attempt to override a parameter of the base module that is not declared in the paramset results in a warning and the offending parameter override is ignored.

Instantiating Analog Primitives

The remaining sections of the chapter describe how to instantiate some analog primitives in your code. For more information, see the “Preparing the Design: Using Analog Primitives and Subcircuits” chapter of the *Virtuoso AMS Designer simulator User Guide*.

As you can instantiate Verilog-AMS modules in other Verilog-AMS modules, you can instantiate Spectre and SPICE masters in Verilog-AMS modules. You can also instantiate models and subcircuits in Verilog-AMS modules. For example, the following Verilog-AMS module instantiates two Spectre primitives: a resistor and an isource.

```
module ri_test (pwr, gnd) ;
electrical pwr, gnd ;
parameter real ibias = 10u, ampl = 1.0 ;
electrical in, out ;

    resistor #(.r(100K)) RL (out, pwr) ;        //Instantiate resistor
    isource #(.dc(ibias)) Iin (gnd, in) ;    //Instantiate isource

endmodule
```

When you connect a net of a discrete discipline to an analog primitive, the simulator automatically inserts a connect module between the two.

However, some instances require parameter values that are not directly supported by the Verilog-AMS language. The following sections illustrate how to set such values in the instantiation statement.

© 2000-2015 All Rights Reserved.

Instantiating Analog Primitives that Use Array Valued Parameters

Some analog primitives take array valued parameters. For example, you might instantiate the `svcvs` primitive like this:

```
module fm_demodulator(vin, vout, vgnd) ;
input vin, vgnd ;
output vout ;
electrical vin, vout, vgnd ;
parameter real gain = 1 ;

    svcvs #(.gain(gain),.poles({-1M, 0, -1M, 0}))
         af_filter (vout, vgnd, vin, vgnd) ;

    analog begin
        ...
    end

endmodule
```

This `fm_demodulator` module sets the array parameter `poles` to a comma-separated list enclosed by a set of square brackets.

Instantiating Modules that Use Unsupported Parameter Types

Spectre built-in primitives take parameter values that are not supported directly by the Verilog-AMS language. The following cases illustrate how to instantiate such modules.

To set a parameter that takes a string type value, set the value to a string constant. For example, the next fragment shows how you might set the `file` parameter of the vsource device.

```
vsource #(.type("pwl"), .file("mydata.dat") V1(src,gnd);
```

To set an enumerated parameter in an instance of a Spectre built-in primitive, enclose the enumerated value in quotation marks. For example, the next fragment sets the parameter `type` to the value `pulse`.

```
vsource #(.type("pulse"),.val1(5),.period(50u)) Vclk(clk,gnd);
```


© 2000-2015 All Rights Reserved.

Using an M Factor (Multiplicity Factor)

Circuit designers use m factors to mimic parallel copies of identical devices without having to instantiate large sets of devices in parallel. A design instance can inherit an m factor from one of its ancestors in a hierarchy of instances. The value of the inherited m factor in a particular module instance is the product of the m factor values in the ancestors of the instance and of the m factor value in the instance itself. If there are no passed m factors in the instance or in the ancestors of the instance, the value of the m factor is one (1.0).

In the Cadence implementation of Verilog-AMS, you use the `inherited_mfactor` attribute to access the value of the m factor and set its value as follows:

```
(* inherited_mfactor *) parameter real m=1;
```

and you use the `passed_mfactor` attribute to pass an m factor down the hierarchy; for example:

```
one #(.m(3)) (* integer passed_mfactor = "m"; *) One();
```

This example specifies an m-factor parameter called `m`, gives it the value 3, and passes that value down to instance `One` of the module called `one`. Module `one` does not have to have the `m` parameter declared in its interface.

Note: If you are using the AMS Designer simulator in the AMS Designer environment, the AMS netlister inserts the `passed_mfactor` attribute so that you only need to insert the `inherited_mfactor` parameter.

Example: Using an M Factor

The following example illustrates how the m-factor value is passed down the hierarchy and how the effective value is the product of the m factors in the current instance and in the ancestors of the current instance.

```
//Verilog-AMS HDL for "amslib", "top" "verilogams"

`include "constants.vams"
`include "disciplines.vams"

module top;
    resistor R1(a,b);
    one #(.m(3)) (* integer passed_mfactor = "m"; *) One();
// The above sets the m factor for instance One to 3.
endmodule


//Verilog-AMS HDL for "amslib", "one" "verilogams"

`include "constants.vams"
`include "disciplines.vams"

module one ( );
    parameter real (* integer inherited_mfactor; *) m=1;
```


© 2000-2015 All Rights Reserved.

```
    resistor R1(a,b);
    two Two();
    analog $strobe ("Inherited mfactor in module one is %f",m);
// Value of m factor is 3, as set in module top.
endmodule


//Verilog-AMS HDL for "amslib", "two" "verilogams"


`include "constants.vams"
`include "disciplines.vams"

module two ( );
    three #(.m(2)) (* integer passed_mfactor="m";*) Three();
// m factor is not accessed in this module, but a factor of 2
// is added.
endmodule


//Verilog-AMS HDL for "amslib", "three" "verilogams"

`include "constants.vams"
`include "disciplines.vams"
module three ( );
    parameter real (* integer inherited_mfactor; *) m=1;
// The effective value of m factor is now 3 * 2 = 6.
    resistor R1(a,b);
    four Four(); // No m factor is specified.
    analog $strobe ("Inherited mfactor in module three is %f",m);
endmodule


//Verilog-AMS HDL for "amslib", "four" "verilogams"

`include "constants.vams"
`include "disciplines.vams"
module four ( );
    resistor R1(a,b);
endmodule
```

When you simulate, these modules produce output like the following.

```
ncsim> run
inherited mfactor in module one is 3.000000
inherited mfactor in module three is 6.000000
```


© 2000-2015 All Rights Reserved.

Including Verilog-A Modules in Spectre Subcircuits

Users of AMS Designer can instantiate Spectre cells in their Verilog-AMS code. By using the `ahdl_include` statement, those Spectre cells can, in turn, instantiate Verilog-A modules. This situation, which users of Spectre libraries often encounter, is summarized by the following diagram.

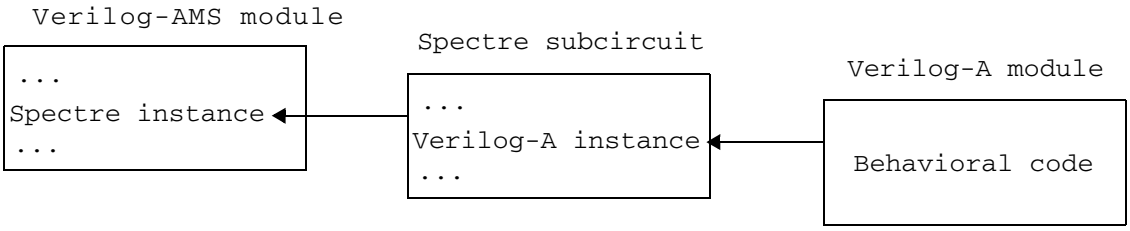

To set up a hierarchy like this one, you use an `ahdl_include` statement in the Spectre subcircuit to include the Verilog-A module.

The `ahdl_include` statement used in the Spectre subcircuit has the following format.

```
ahdl_include "filename"
```

For *`filename`*, use either a full or a relative path that resolves across your network. For a Verilog-A file, *`filename`* must have a `.va` file extension.

For example, to include in your Spectre subcircuit a Verilog-A npn instance with the name `ahdlNpn`, you use a statement like the following,

```
ahdl_include "/usr/ahdlNpn.va"
```

Be sure that you make the Spectre subcircuit available by defining the MODELPATH variable. For more information about this procedure, see the “Using Subcircuits and Models Written in SPICE or Spectre” section, in Chapter 3, of the *Virtuoso AMS Designer simulator User Guide*.

© 2000-2015 All Rights Reserved.

11

Mixed-Signal Aspects of Verilog-AMS

The Cadence® Verilog®-AMS language brings analog and digital modeling together in a single language. This chapter describes the mixed-signal features of Verilog-AMS and how the continuous (analog) and discrete (digital) domains interact.

Fundamental Mixed-Signal Concepts

Becoming familiar with the following terms will help you understand the discussion in this chapter.

Domains

The domain of a value refers to the method used to calculate the value. In Verilog-AMS,

- The potentials and flows described in natures are calculated in the continuous domain.
- Register contents and the states of gate primitives are calculated in the discrete domain.
- The values of real and integer variables are calculated in either the continuous or discrete domain, depending on the context in which their values are assigned. The domain of a variable is that of the context from which its value is assigned.

Values calculated in the discrete domain change value instantaneously and only at integer multiples of a minimum resolvable time. Values calculated in the continuous domain vary continuously.

Contexts

Statements in a Verilog-AMS module description can appear in the body of an `analog` block, in the body of an `initial` or `always` block, or outside of any block. Statements that appear in an `analog` block are in the continuous context; statements in any other location are in the discrete context. A particular variable can be assigned values in either context, but not in both contexts.

© 2000-2015 All Rights Reserved.

Nets, Nodes, Ports, and Signals

In Verilog-AMS, hierarchical structures are created when higher-level modules create instances of lower level modules and communicate with those instances through input, output, and bidirectional ports. A *port* represents the physical connection of an expression in the instantiating or parent module with an expression in the instantiated or child module. The expressions, which can include registers, variables, and nets of both continuous and discrete disciplines, are referred to as *connections*. A port of an instantiated module has two nets, the upper connection, which is a net in the instantiating module, and the lower connection, which is a net in the instantiated module.

A net is said to be in the discrete domain if it has an associated discrete discipline. A net is in the continuous domain if it has an associated continuous discipline. A *signal* is a hierarchical collection of nets that, because of port connections, are contiguous. If all the nets that make up a signal are in the discrete domain, the signal is a *digital signal*. If all the nets that make up a signal are in the continuous domain, the signal is an *analog signal*. A signal that consists of nets from both domains is called a *mixed signal*. Similarly, a port whose connections are both analog is an *analog port*, a port whose connections are both digital is a *digital port*, and a port with one analog connection and one digital connection is a *mixed port*.

Nets and variables in the continuous domain are termed *continuous nets* and *continuous variables.* Nets and variables in the discrete domain are termed *discrete nets* and *discrete variables*.

If a signal is analog or mixed, then it is associated with a node. Regardless of the number of analog nets in an analog or mixed signal, and regardless of how the analog nets in a mixed signal are interspersed with digital nets, the analog portion of an analog or mixed signal is represented by only a single electrical node. This guarantees that at any instant in time the analog portion of a mixed or analog signal has one, and only one, value that represents its potential with respect to ground.

Analog nodes and branches are allowed only as arguments to signal access functions, analog functions, and analog primitive and module instantiations. They cannot be connected to digital primitives.

For additional information, see Appendix A, “Nodal Analysis.”

Mixed-signal and Net Disciplines

The discipline of a continuous net specifies the tolerance (`abstol`) used to calculate the potential of the associated node. A mixed signal might have multiple continuous nets of different compatible continuous disciplines, with different `abstol` values. In this case, the

© 2000-2015 All Rights Reserved.

`abstol` of the associated node is the smallest of the `abstol` values specified in the disciplines associated with the continuous nets of the signal.

Behavioral Interaction

Verilog-AMS supports various types of blocks used to describe behavior. In general, digital behavior is described in `initial` and `always` blocks and analog behavior is described in `analog` blocks. In a Verilog-AMS module, you can have, at most, one `analog` block and any number of `initial` and `always` blocks.

The nets and variables of each domain can be referenced in the other context, which is how information passes between the continuous and discrete domains. Read operations of nets and variables in both domains are allowed from both contexts. Write operations of nets and variables are only allowed from within the context of their domain.

The following example illustrates some of these capabilities.

```
`timescale 1ns/1ns
module mod (in);
integer abve;      // Will be an analog-owned variable.
integer below;     // Will be an analog-owned variable.
integer d;         // Will be a digital-owned variable.

electrical in;

always begin       // Enter the digital context.
    if ( abve )    // Read the analog variable in the digital context.
        d = 1;     // Write the variable d in the digital context.

    if ( below )
        d = 0;     // d, because written in digital context, is owned by digital.
    #5;
end

analog begin       // Enter the analog context.
    @ (cross (V(in) - 2.5, +1 ) )
        abve = 1;   // Write to the variable abve in the analog context.
    @ (cross (V(in) - 2.5, -1 ) )
        abve = 0;   // abve, because written in analog context,is owned by analog.

    if ( d == 1 )   // Read the value of d in the analog context.
        $strobe(" d is still high\n"); end

endmodule
```

Using Verilog-AMS, you can

- Access discrete primaries, such as nets and variables, from a continuous context
- Access continuous primaries, such as flows, potentials and variables, from a discrete context

© 2000-2015 All Rights Reserved.

- Detect discrete events from a continuous context
- Detect continuous events from a discrete context

Accessing Discrete Nets and Variables from a Continuous Context

Using Verilog-AMS, you can access discrete nets and variables from a continuous context. The following table shows how values map from the discrete context to the analog context.

Type of discrete net or variable	Example	Equivalent continuous variable type	Mapping from discrete to continuous
`real`	`real r;` `real rm[0:8];`	`real`	Discrete real values are accessed in the continuous context as real numbers.
`integer`	`integer i;` `integer im[0:4];`	`integer`	Discrete integer values are accessed in the continuous context as integer numbers.

`bit`	`reg r1;`
	`wire w1;`
	`reg [0:9] r[0:7];`
	`reg r[0:66];`
	`reg [0:34] rb;`
		`integer`	Discrete bit and bit groupings (buses and part selects) are accessed in the continuous context as integer numbers. `x` and `z` values cannot be represented as analog integers. Furthermore, it is illegal in the analog context to reference digital bits that are set to `x` or `z`.
			
			The sign bit (bit 31) of the integer is always set to zero, and the lowest bit of the bit grouping is mapped to the 0th bit of the integer. Then, the next bit of the bus is mapped to the 1st bit of the integer and so on. If the bus width is less than 31 bits, the higher bits of the integer are set to zero. It is illegal to access a discrete bit grouping with more than 31 bits.

The following example shows code that accesses the value of a discrete primary from a continuous context.

© 2000-2015 All Rights Reserved.

```
module onebit_dac (in, out) ;
input in ;
inout out ;
wire in ;
logic in ;
electrical out ;
real vout ;

analog
    if (in==0)          // "in" is a discrete primary.
        vout = 0.0 ;
    else
        vout 3.0 ;
    V(out) <+ vout ;

endmodule
```

Accessing Continuous Nets and Variables from a Discrete Context

Using access functions, you can probe continuous nets from within a discrete context. All probes that are legal in the continuous context of a module are also legal from within the discrete context. For more information on access functions, see "Obtaining and Setting Signal Values" on page 133.

The following example illustrates how you might access a continuous net from the discrete context.

```
module sampler (in, clk, out);
inout in;
input clk;
output out;
electrical in;   // "in" is a continuous net.
wire clk;
reg out;
always @(posedge clk)   // Entering the discrete context.
    out = V(in);       // Access the continuous net.
endmodule
```

Continuous variables can be accessed for reading from any discrete context in the same module that the continuous variables are declared. Because the discrete domain can fully represent all continuous types, a continuous variable is fully visible when it is read in a discrete context.

The following example illustrates this capability.

```
real aVar;            // Will be a continuous analog variable.
electrical in;
reg dReg;

analog begin          // Enter the analog context.
    @ (cross (V(in) - 2.5, +1 ) )
       aVar = 1;     // Write to variable, so aVar is now owned by analog.
end
```


© 2000-2015 All Rights Reserved.

```
always begin          // Enter the digital context.
    #5 dReg = aVar;  // Read value of analog aVar within digital context.
end
```

Detecting Discrete Events from a Continuous Context

You can detect discrete events from within a continuous context. The arguments to discrete events in continuous contexts are considered part of the discrete context. A discrete event in a continuous context is non-blocking, like the other events allowed in continuous contexts.

The following example illustrates a discrete event being detected in a continuous context.

```
module sampler3 (in, clk1, clk2, out);
input in, clk1, clk2;
output out;
wire clk1;
real vout ;
electrical in, clk2, out;
analog begin                                // Enter the continuous context.
    @(posedge clk1, 1))                    // Detect discrete event posedge clk1.
        vout = V(in);
    V(out) <+ vout;
end
endmodule
```

Detecting Continuous Events from a Discrete Context

You can detect analog (continuous) events from within a discrete context. The arguments to these events are considered part of the continuous context. An analog event used in a discrete context is blocking like other discrete events.

The following example illustrates an analog event being detected in a discrete context.

```
module sampler2 (in, clk, out);
input in, clk;
output out;
wire in;
reg out;
electrical clk;
always @(cross(V(clk) - 2.5, 1))   // Code to detect the analog event.
    out = in;
endmodule
```

Connect Modules

The Verilog-AMS language allows you to describe analog and digital components and to connect these components together. A *connect module* is a module automatically or manually inserted to connect the continuous and discrete disciplines (mixed-nets) of the design hierarchy together. A connect module contains the code required to translate and

© 2000-2015 All Rights Reserved.

propagate signals between the analog and digital components. This section contains details about the following aspects of using connect modules.

- Coding connect modules
- Understanding the factors affecting the placement of connect modules
- Understanding the behavior of connect modules

Some additional examples of connect modules can be found at:

your_install_dir/tools/affirma_ams/etc/connect_lib

Coding Connect Modules

Connect modules have the following syntax.

```
connectmodule_declaration ::=
        connectmodule module_identifier ( port, port ) ;
    [   connectmodule_items ]
        endmodule

port ::=
        port_identifier

connectmodule_items ::=
        { connectmodule_item }
    |   analog_block

connectmodule_item ::=
        connectmodule_item_declaration
    |   defparam_override
    |   analog_primitive_instantiation
    |   digital_continuous_assignment
    |   digital_gate_instantiation
    |   digital_udp_instantiation
    |   digital_specify_block
    |   digital_initial_construct
    |   digital_always_construct

connectmodule_item_declaration ::=
        parameter_declaration
    |   input_declaration
    |   output_declaration
    |   inout_declaration
    |   integer_declaration
    |   net_discipline_declaration
    |   real_declaration
```

Specifying Port Directions in Connect Modules

The disciplines associated with the two specified ports, and the directions declared in the module, together determine when the connect module can be used to connect the discrete and continuous domains of a mixed net.

© 2000-2015 All Rights Reserved.

For example, the following connect module, `d2a`, can bridge

- A mixed input port whose upper connection is compatible with the logic discipline and whose lower connection is compatible with the electrical discipline
- A mixed output port whose upper connection is compatible with the electrical discipline and whose lower connection is compatible with the logic discipline.

```
connectmodule d2a(in,out);
    input in ;
    output out ;
    logic in ;
    electrical out ;
endmodule
```

The next example, `a2d`, defines a connect module that can bridge

- A mixed output port whose upper connection is compatible with the logical discipline and whose lower connection is compatible with the electrical discipline
- A mixed input port whose upper connection is compatible with the electrical discipline and whose lower connection is compatible with the logic discipline

```
connectmodule a2d(out, in) ;
    output out ;
    input in ;
    logic out ;
    electrical in ;
endmodule
```

The final example, `bidir`, defines a connect module that can bridge any mixed port where one connection is compatible with the logic discipline and the other connection is compatible with the electrical discipline.

```
connectmodule bidir(out, in) ;
    inout out ;
    inout in ;
    logic out ;
    electrical in ;
endmodule
```

The `d2a`, `a2d`, and `bidir` examples illustrate all the direction combinations that are allowed in a connect module. You must not define a connect module that declares both ports as input or both ports as output.

Coding to Meet Connect Module Requirements

Connect modules have two functions:

- Translating between the analog and digital domains
- Using analog information to control the propagation of digital signals

© 2000-2015 All Rights Reserved.

This section presents examples that illustrate how to code connect modules to handle these requirements. For more information, see "Driver-Receiver Segregation" on page 243.

Example: Using Analog Data to Control Digital Propagation

In the following connect module, the analog code determines when the ordinary driver outputs propagate to the ordinary receivers. The `c2e` connect module drives the digital port `d` (through the register `tmp`) only when the analog value rises above or falls below a 2.5-volt threshold.

```
connectmodule c2e(d,a);
inout d;
inout a;
cmos1 d;
electrical a;
reg tmp;

assign d = tmp ;       // Bind d to a register.

analog                 // Translate from digital to analog.
    V(a) <+ transition( d == 1 ? 5.0 : 0.0, 3n, 3n);

always @( cross ( V(a) - 2.5, +1 ) )
    tmp = 1`b1;        // Propagate the digital signal when
                       // the analog value rises to 2.5v.

always @( cross ( V(a) - 2.5, -1 ) )
    tmp = 1`b0;        // Propagate the digital signal when
                       // the analog value falls to 2.5v.

endmodule
```

Example: Using Driver Access Functions to Control Digital Propagation

The connect module described in this section uses driver access functions to examine the values of individual digital drivers. The module uses assumptions about the analog characteristics of a `cmos1 (logic)` driver to present to port `a` an accurate analog equivalent of the digital signal. The module then uses the voltage at port `a` to determine the logic state that propagates to the receivers of the digital signal.

The module embodies the following assumptions about `cmos1 (logic)`:

- The equivalent analog circuit of an output is a function of the rail-to-ground supply voltage `supply`.
- The equivalent analog circuit when a gate output in `cmos1 (logic)` is driven high can be approximated by a resistance `impedence1` between the output and the rail.
- The equivalent analog circuit when a gate output in `cmos1 (logic)` is driven low can be approximated by a resistance `impedence0` between the output and ground.

© 2000-2015 All Rights Reserved.

- The effect of the impedance between output and rail when the output is driven low, and of the impedance between output and ground when the output is driven high, is negligible.

This connect module effectively adds another parallel resistor from output to ground whenever a digital output connected to the net goes low and adds another parallel resistor from output to rail (`supply`) whenever a digital output connected to the net goes high.

```
`include "disciplines.vams"
`timescale 1ns/1ps

connectmodule d2a(d,a);
input d;
output a;
logic d;
electrical rail, a, gnd;
reg out;
ground gnd;
branch (rail,a) pull_up;
branch (a,gnd) pull_down;
branch (rail,gnd) power;
parameter real impedence0 = 120.0;
parameter real impedence1 = 100.0;
parameter real impedenceOff = 1e6;
parameter real vt_hi = 3.5;
parameter real vt_lo = 1.5;
parameter real supply = 5.0;
integer i, num_ones, num_zeros;

// net_resolution(d, out);
    assign d=out;  // Cadence method used instead of net_resolution

initial begin
    num_ones=0;
    num_zeros=0;
end

always @(driver_update(d)) begin
    num_ones = 0;
    num_zeros = 0;
    for ( i = 0; i < $driver_count(d); i=i+1 )
        if ( $driver_state(d,i) == 1 )
            num_ones = num_ones + 1;
        else
            num_zeros = num_zeros + 1;
end

always @(cross(V(a) - vt_hi, -1) or cross(V(a) - vt_lo, +1))
    out = 1'bx;
always @(cross(V(a) - vt_hi, +1))
    out = 1'b1;
always @(cross(V(a) - vt_lo, -1))
    out = 1'b0;

analog begin
// Approximately one impedence1 resistor to rail per high output
// connected to the digital net.
    V(pull_up) <+ 1/((1/impedence1)*num_ones+(1/impedenceOff)) * I(pull_up);

// Approximately one impedence0 resistor to ground per low output
// connected to the digital net.
    V(pull_down) <+ 1/((1/impedence0)*num_zeros+(1/impedenceOff)) *I(pull_down);
```


© 2000-2015 All Rights Reserved.

```
    V(power) <+ supply;
end
endmodule
```

If this module is used as the `d2a` in the following schematic,

- The delay from digital drivers to the digital receiver is a function of the value of the capacitor
- The delay with two gates driving the signal is approximately half as long as the delay with one gate driving the signal

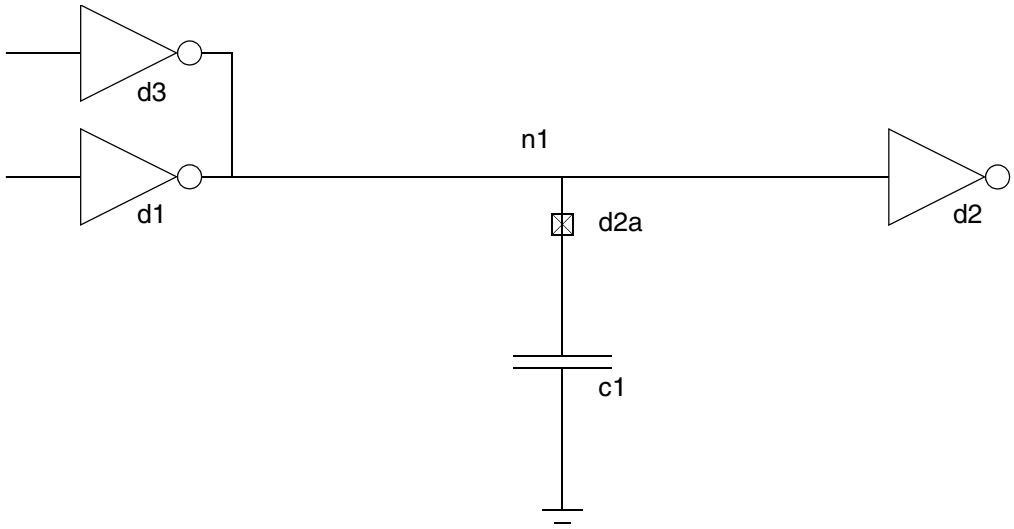

Using String Parameter in Connect Modules

You can use the string parameter in a connect module to indicate a global supply, as shown in the following example:

```
connectmodule elect_to_logic(el, cm);
    input el;
    output cm;
    reg cm;
    electrical el;
    ddiscrete cm;
    string parameter vdd = "(not_given)"; // Set via the CR
    ...
endmodule
```

You can also use the string parameter in the `connect` statement to override the string parameter inside connect module, as shown below.

© 2000-2015 All Rights Reserved.

```
connectrules mixedsignal;
    connect elect_to_logic #(.vdd("$root.global_supply.vdd"));
    connect logic_to_elect #(.vdd("$root.global_supply.vdd"));
endconnectrules
```

Using Automatically-Inserted Connect Modules

To make use of an automatically-inserted connect module, you must specify the circumstances in which it is to be used. To do that, use the connect specification discussed in the next section. After that, the simulator automatically inserts the connect module according to the criteria that you specify. For an example of a design that uses automatically inserted connect modules, see "Example: Automatic Insertion of Connect Modules" on page 235.

Choosing and Specializing Connect Modules

Use the `connect` specification to declare which connect modules are to be automatically inserted in mixed ports. There can be multiple connect module declarations with port disciplines and directions that match each discrete/continuous discipline pair. The `connect` specification specifies which to use.

```
connect_specification ::=
        connectrules connectrule_identifier ;
        { connect_spec_item }
        endconnectrules

connect_spec_item ::=
        connect_insertion
    |   connect_resolution

connect_insertion ::=
        connect connect_module_identifier [connect_mode] [#(attribute_list)]
        [ [direction] discipline_iden, [direction] discipline_iden ] ;

connect_mode ::=
        merged
    |   split

attribute_list ::=
        attribute
    |   attribute_list , attribute

attribute ::=
        .parameter_identifier ( expression )

direction ::=
        input
    |   output
    |   inout
```

connect_module_identifier is the connect module to be used to connect mixed nets that have the disciplines declared in the connect module. For example, if `d2a` is defined as

© 2000-2015 All Rights Reserved.

```
connectmodule d2a(in,out);
    input in ;
    output out ;
    logic in ;
    electrical out ;
endmodule
```

then the specification

```
connect d2a ;
```

designates the `d2a` module as the connect module to insert automatically to bridge a mixed input port whose upper connection is compatible with the logic discipline and whose lower connection is compatible with the electrical discipline.

`connect_resolution` is further defined as follows.

```
connect_resolution ::=
        connect discipline_list resolveto discipline_identifier ;

discipline_list ::=
        discipline_identifier
    |   discipline_list, discipline_identifier
```

You use the `connect_resolution` statement to specify a single discipline to use during the discipline resolution process when multiple nets with compatible discipline are part of the same mixed net.

`connect_mode` specifies whether all ports of a common discrete discipline and port direction share a single connect module or have individual connect modules. This attribute is discussed further in "connect_mode Attribute Affects Connect Module Placement" on page 237.

`attribute_list` allows you to override the default parameter values of the connect module. The expressions that specify the overriding values must not be out-of-module references. For example, the following statement specifies values for `tt` and `vcc`.

```
connect d2a_035u #(.tt(3.5n), .vcc(3.3)) ;
```

`direction` allows you to override the port directions specified in the connect module. For example, using the connect module `d2a`, defined above, the statement

```
connect d2a output logic, input electrical ;
```

designates the `d2a` module as the connect module to insert automatically to bridge a mixed input port whose upper connection is compatible with the electrical discipline and whose lower connection is compatible with the logic discipline or a mixed output port whose lower connection is compatible with electrical and whose upper connection is compatible with logic.

You can use the discipline identifiers to specify different discipline combinations for the connect module. For example, the connect module `d2a`, as it is coded, can only be used to

© 2000-2015 All Rights Reserved.

bridge the logic and electrical disciplines. However, you can use it for other discipline pairs by coding something like this.

```
connect d2a logic, sig_flow_i ;
```

To use this discipline override form of the connect specification, the discipline you specify for the continuous domain must be compatible with the continuous discipline specified in the connect module. Similarly, the discipline you specify for the discrete domain must be compatible with the discrete discipline specified in the connect module.

Where AMS Designer Searches for Connect Rules and Connect Modules

On the `ncelab` command line, you can list multiple `connectrules` blocks, each of which can contain many connect rules. Each connect rule specifies a connect module to be inserted when the connect rule is selected. A connect rule and the connect module it specifies can be in different libraries.

The AMS elaborator uses the following approach to determine which `connectrules` block and which connect rule to use.

1. The elaborator searches, in order, as many of the `connectrules` blocks listed on the command line as necessary to find a valid connect rule. For example, if the command line is

   ```
   ncelab cRuleBlockA cRuleBlockB
   ```

   the elaborator looks first at the connect rules in `cRuleBlockA`. If there are no valid connect rules in `cRuleBlockA`, then the elaborator looks at the connect rules in `cRuleBlockB`.

2. To determine whether a connect rule is valid, the elaborator attempts to locate (as described in the next step) a connect module that matches the name specified by the connect rule and the discipline and direction requirements for the port and net being connected.

3. The elaborator searches the following locations, in order, for a connect module that matches each connect rule in the `connectrules` block.

   - The parent library of the connect module instance.

     The elaborator inserts connect modules between a lower port and an upper net. The *parent library* is the library containing the module in which the upper net is located.

   - The library that contains the `connectrules` block.

   - The libraries listed in the `cds.lib` file.

© 2000-2015 All Rights Reserved.

If, in any single one of these libraries, the elaborator finds one (and only one) connect module that matches the selected connect rule, the connect rule is valid. After finding a connect module that makes the connect rule valid, the elaborator searches the rest of the current library, but does not go on to other libraries.

If any single one of these libraries contains more than one connect module that matches the selected connect rule, the elaborator issues an error.

4. If, in a `connectrules` block, there are multiple valid connect rules, the elaborator selects the last such valid connect rule listed. If there are no valid connect rules, the elaborator looks in the next `connectrules` block listed on the `ncelab` command.

Example: Automatic Insertion of Connect Modules

This example describes a ring of digital and analog inverters. To bridge between the discrete and continuous domains, the design uses two connect modules: `elec_to_logic` and `logic_to_elect`. The simulator automatically inserts the `elec_to_logic` connect module between the `out` port of instance `a3` and net `n1`, which is bound to the `in` port of instance `d1`. The simulator automatically inserts the `logic_to_elect` connect module between the `out` port of instance `d2` and net `n3`, which is bound to the `in` port of instance `a3`.

```
module ring;
    dig_inv d1 (n1, n2);
    dig_inv d2 (n2, n3);
    analog_inv a3 (n3, n1);

endmodule

module dig_inv(in, out);
    input in;
    output out;
    logic in, out

    always begin
        out = #10 ~in;
    end

endmodule

module analog_inv(in, out);
    input in;
    output out;
    electrical in, out;
    parameter real vth =2.5;

    analog begin
        if (V(in) > vth)) outval = 0;
    else
        outval = 5 ;
    V(out) <+ transition(outval);
    end

endmodule

connectmodule elect_to_logic(el,cm);
    input el;
    output cm;
```


© 2000-2015 All Rights Reserved.

```
    reg cm;
    electrical el;
    logic cm;

    always
        @(cross(V(el) - 2.5, 1) cm = 1;

    always
        @(cross(V(el) - 2.5, -1) cm = 0;

endmodule

connectmodule logic_to_elect(cm,el);
    input cm;
    output el;
    logic cm;
    electrical el;
    analog
        V(el) <+ transition((cm == 1) ? 5.0 : 0.0);

endmodule


connectrules crules ;
    connect elect_to_logic; // Specifies which appropriate connect module to use.
    connect logic_to_elect;
endconnectrules
```

Names for Automatically Inserted Connect Module Instances

Parameters of automatically inserted connection instances can be individually set by using the `defparam` statement. To facilitate this, the instance names for the automatically inserted modules are entirely predictable.

To determine the name of a connect module instance when the `connect_mode` attribute value is `merged`

1. Identify the discipline, *`DisciplineName`*, at the bottom connection.
2. Identify the common signal, *`Net`*.
3. Identify the connect module, *`ModuleName`*.

The instance name of the connect module is

`Net__ModuleName__DisciplineName`

where the name sections are joined by double underscores.

To determine an instance name when the `connect_mode` attribute value is `split`

1. Identify the discipline of the common net, *`Net`*, at the top connection.
2. Identify the local instance name (non-hierarchical name) at the bottom connection, *`InstName`*.

© 2000-2015 All Rights Reserved.

3. Identify the port name at the bottom connection, *PortName*.

The instance name of the connect module is,

Net__InstName__PortName

where the name sections are joined by double underscores.

Understanding the Factors Affecting Connect Module Placement

By definition, connect modules are inserted between analog nets and digital nets. There are several factors, however, that affect where the boundary between analog and digital nets is drawn. These factors include

- The value of the `connect_mode` attributes of `connect` statements
- The disciplines used to explicitly declare nets
- The result of discipline resolution, which assigns disciplines and domains to nets whose disciplines and domains are otherwise unknown
- The use of aliased ports, which can result in the insertion of connect modules.

connect_mode Attribute Affects Connect Module Placement

The `connect_mode` attribute of the `connect` statement controls the segmentation of the signal at each level of the hierarchy when a connect module is inserted. This attribute applies only when there is more than one port of discrete discipline on a signal for which the connect statement applies. The attribute has two possible values: `split` and `merged`. The `split` value indicates that there should be one connect module inserted per port. The `merged` value, which is the default, specifies that there is to be only one connect module inserted for all the ports on a signal that match a given `connect` statement.

connect_mode Merged

The `merged` value for the `connect_mode` attribute instructs the elaborator to group all ports (whether `input`, `output`, or `inout`) and to insert just one connect module for all of them, provided that the needed connect module is the same for all the ports.

The following figure illustrates the effect of the `merged` value in three connect statements.

```
connectrules example ;
    connect d2a merged input ttl, output electrical ;
    connect bidir merged output electrical, input ttl ;
    connect bidir merged inout ttl, inout electrical ;
endconnectrules
```


© 2000-2015 All Rights Reserved.

Notice how connecting the electrical signal to the TTL input and inout ports results in the insertion of a single connect module, `bidir`. Connecting the electrical signal to the TTL output ports results in the insertion of a single, but different, module, `d2a`.

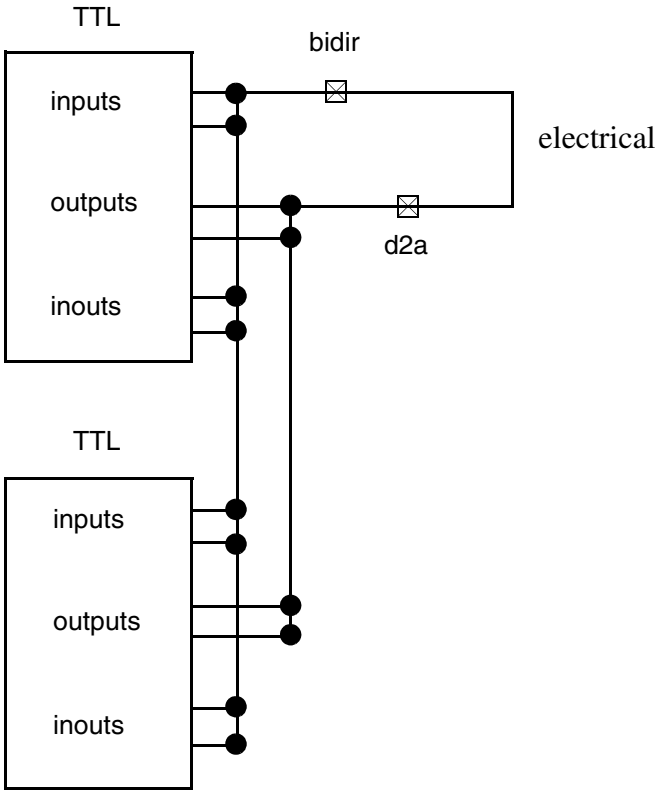

connect_mode Split

The `split` value for the `connect_mode` attribute instructs the simulator to insert a connect module for each port. The following figure illustrates the effect of the `split` value in three connect statements.

```
connectrules example ;
    connect d2a split input ttl, output electrical ;
    connect a2d merged output electrical, input ttl ;
    connect bidir merged inout ttl, inout electrical ;
endconnectrules
```

With this specification, connecting the electrical signal to the TTL input ports results in the insertion of a single instance of the `a2d` connect module, as specified by the `merged` value. Similarly, a single instance of the `bidir` connect module is inserted for the inout ports.

© 2000-2015 All Rights Reserved.

However, the `split` value used for the `d2a` connect statement results in the insertion of a distinct instance of the connect module for each output port.

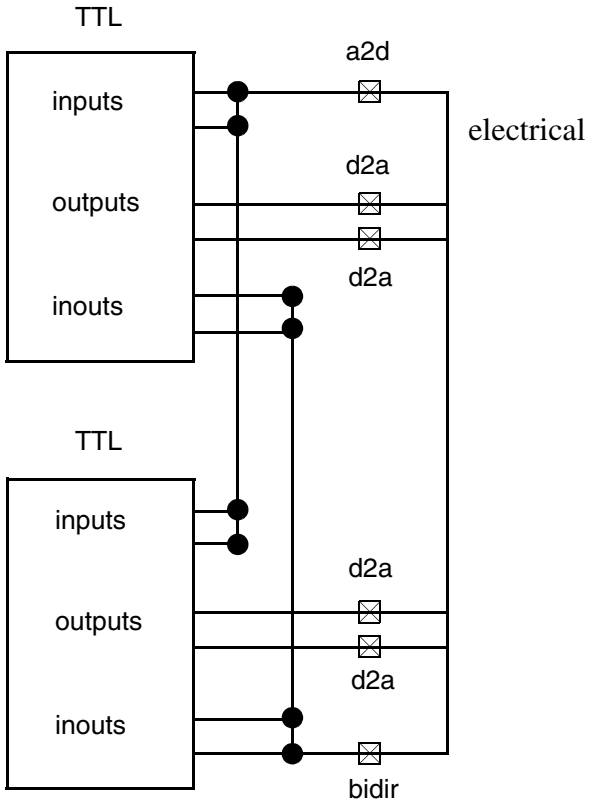

Disciplines Used to Declare Nets Affect Connect Module Placement

Connect modules are inserted at the boundary between the analog and digital domains. It follows that changing the location of the boundary can affect where connect modules are placed. For example, if the wires in the following schematic are digital, a single connect module is inserted between the analog capacitor and the digital inverters.

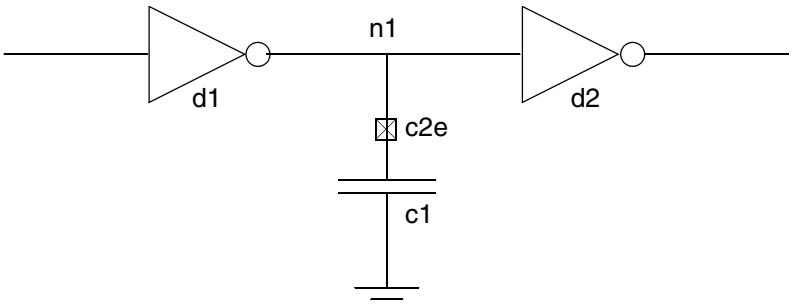

© 2000-2015
All Rights Reserved.

However, if net `n1` is analog, two connect modules are inserted.

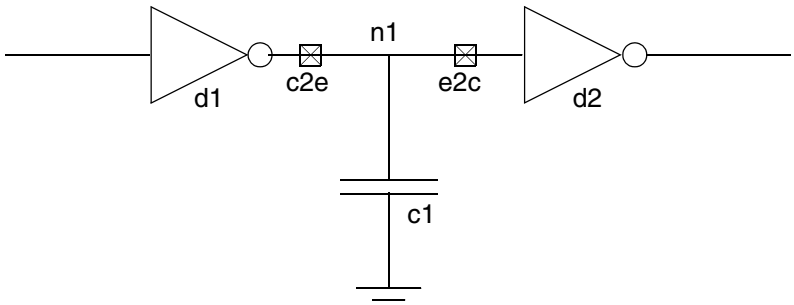

In this case, the `c2e` module translates the digital output of inverter `d1` into analog voltage for `n1`, and the `e2c` module translates analog voltage back into a digital signal for inverter `d2`. The analog capacitor connects directly to analog net `n1`.

Discipline Resolution Affects Connect Module Placement

Another factor that affects the location of the boundary between the analog and digital domains and, therefore, where connect modules are inserted, is *discipline resolution*. Discipline resolution is the process of assigning a domain and discipline to nets whose domain and discipline are otherwise unknown (or whose discipline is `wire`).

The factors that affect discipline resolution are listed in the following table.

Factor	For more information, see
The disciplines that are used in the design, including the disciplines used for inherited connections	"Disciplines" on page 74
The value of the `` `default_discipline `` compiler directive	"Setting a Default Discrete Discipline for Signals" on page 256
The use of discipline resolution connect statements	"Using Discipline Resolution Connect Statements" on page 241
The discipline resolution method selected	"Discipline Resolution Methods" on page 241
The way that mixed-domain buses are used	"Discipline Resolution in Buses" on page 243
The use of aliased ports.	"How Aliased Signals Are Netlisted" in chapter 4, of the *Virtuoso AMS Designer Environment User Guide*.

© 2000-2015 All Rights Reserved.

Using Discipline Resolution Connect Statements

Use the discipline resolution connect statement to specify a single discipline to resolve to when multiple nets with compatible disciplines are part of the same mixed net.

```
connect_resolution ::=
        connect discipline_list resolveto discipline_to_use;

discipline_list ::=
        discipline_identifier
    |   discipline_list, discipline_identifier
```

`discipline_to_use` is the single discipline to be used for the net.

`discipline_list` is the list of compatible disciplines that are to resolve to a single discipline.

For example,

```
connect electrical, electrical_hi_cur, electrical_low_power resolveto electrical
```

Discipline Resolution Methods

Verilog-AMS provides two methods of discipline resolution: default and detailed. The two methods assign domains and disciplines to unknown signal segments in different ways, resulting in different boundaries between the analog and digital domains. If you do not want to use the default method, you can specify the detailed method using the `-disres detailed` elaborator option.

The default and detailed methods have different effects, as follows:

Default method	Detailed method
Propagates both continuous and discrete disciplines up the hierarchy, which typically results in *fewer* connections between the analog and digital domains.	Propagates continuous disciplines up and back down the hierarchy to meet discrete disciplines, which typically results in *more* connections between the analog and digital domains.
Produces connection elements between the analog and digital domains that tend to be *higher* in the hierarchy.	Produces connection elements between the analog and digital domains that tend to be *lower* in the hierarchy.
Assigns *digital* disciplines to more nets on a mixed signal.	Assigns *analog* disciplines to more nets on a mixed signal.

© 2000-2015 All Rights Reserved.

Discipline resolution applies to the following kinds of nets: `wire`, `tri`, `wor`, `trireg`, `wand`, `tri0`, `tri1`, `supply0`, `supply1`, `wreal`, and nets of unknown disciplines. If a net resolves to the analog domain, the software ignores any digital property the net has. If a net resolves to the digital domain, the software considers any digital property that it has during further processing.

The methods use the following steps to assign domains and disciplines:

1. Traverse each signal hierarchically, starting at the bottom, until a net is found that has no assigned discipline.
2. Examine the connections of the segment and assign a domain to the segment.
   - For the default method, examine the connections of the segment to *only the upper* parts of ports. If all such connections are digital, assign the segment to the digital domain. If any such connection is analog, assign the segment to the analog domain.
   - For the detailed method, examine the connections of the segment to *both the upper and the lower* parts of ports. If all such connections are digital, assign the segment to the digital domain. If any such connection is analog, assign the segment to the analog domain.
3. Apply `` `default_discipline `` directives, as appropriate, to nets with digital domains.
4. For each net that has not yet been assigned a discipline, examine the ports to which the segment is connected.
   - For the default method, examine all ports to which the segment forms the *upper* connection. Create a list of all the disciplines at the lower connections of these ports whose domains match the domain of the net.
   - For the detailed method, examine all ports to which the segment forms the *upper or lower* connection. Create a list of all the disciplines at the other connections of these ports whose domains match the domain of the net.
5. Use the list created in the previous step to determine the discipline of the net.
   - If there is only a single discipline in the list, assign that discipline to the net.
   - If there is more than one discipline in the list, and the contents of the list match the discipline list of a resolution connect statement (the `connect…using` syntax), assign to the net the resolved discipline given by the statement.
   - If there is more than one discipline in the list but the contents of the list do not match the discipline list of a resolution connect statement, the discipline of the net remains unknown.

© 2000-2015 All Rights Reserved.

6. (detailed method only.) Traverse each signal hierarchically, starting at the top. When a net is found that has no assigned discipline, repeat step 2 through step 5.

Discipline Resolution in Buses

The individual nets in a bus with an unknown domain are assigned domains according to the following rules.

- If any net in a bus with an unknown domain is used in a behavioral statement, every net in the bus is assigned to the digital domain.
- If any net in a bus with an unknown domain is connected to an analog primitive, every net in the bus is assigned to the analog domain.
- The nets in buses that are used only to establish connectivity can, according to how they are connected, all be assigned to the analog domain, all be assigned to the digital domain, or some nets can be assigned to the analog domain and some to the digital domain. This latter kind of bus is known as a *mixed bus*.

  In a mixed bus, the domains of each net are individually determined by the connections of that particular net, using the discipline resolution methods described in "Discipline Resolution Methods" on page 241.

Understanding How Connect Modules Operate

The previous sections discuss the factors that affect where the software inserts connect modules in a design. The following sections discuss the behavior of connect modules after the software inserts them. The issues include

- Driver-receiver segregation
- Digital islands
- The independent behavior of connect modules

Driver-Receiver Segregation

In a purely digital net, drivers generate signals that propagate directly to receivers. In a mixed net, analog components can affect the propagation of the digital signals. To allow for this possibility, the AMS Designer simulator uses a technique called *driver-receiver segregation*. With driver-receiver segregation, which occurs with every mixed net, digital signals propagate only through connect modules inserted between the drivers and receivers.

© 2000-2015 All Rights Reserved.

Digital nets connected to the ports of manually-inserted connect modules behave as mixed nets and are subject to driver-receiver segregation.

Conceptual Overview of Driver-Receiver Segregation

Consider the following purely digital circuit containing two inverters.

The driver, `d1`, contributes a value directly to the receiver, `d2`.

Adding an analog capacitor to the circuit, turns the net between `d1` and `d2` into a mixed net:

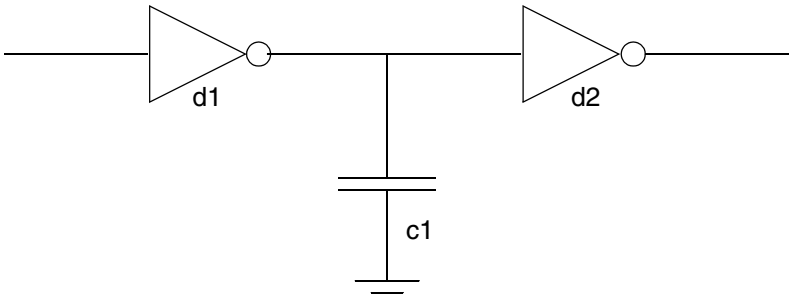

Because the net is mixed, it is subject to driver-receiver segregation, which severs the direct connection between `d1` and `d2`. After driver-receiver segregation, the circuit looks like this:

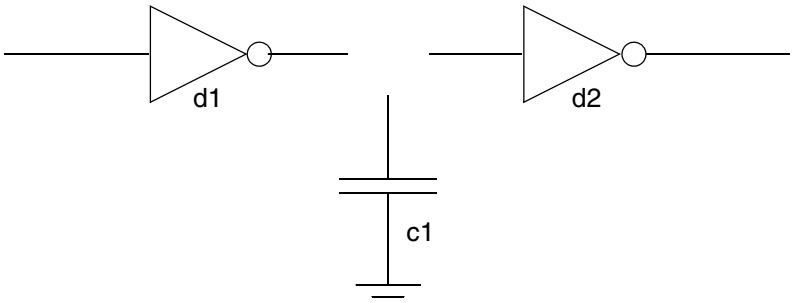

© 2000-2015 All Rights Reserved.

A connect module, `c2e`, reestablishes the link between the digital components and translates between the analog and digital domains. Conceptually, the circuit has the following schematic with the connect module added:

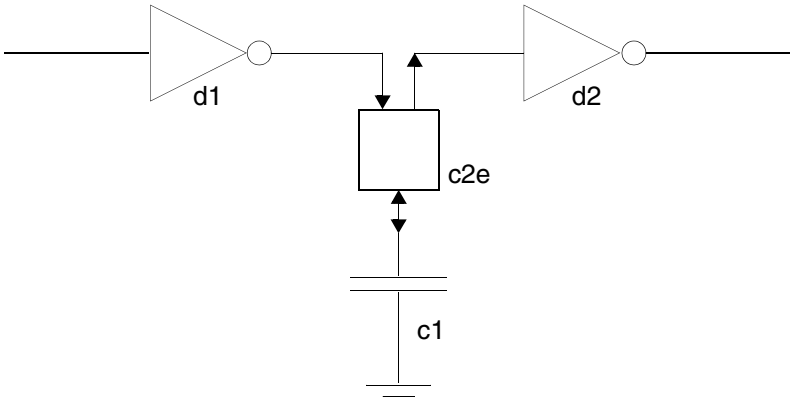

The connect module, `c2e`, has both a digital input side and a digital output side, even when `c2e` is coded with only a single digital port. The `c2e` module must have two sides because part of its function is reading values from `d1` and propagating them to `d2`. This is an important point. To ensure that digital values propagate through a connect module, the connect module code must be written to handle the task. Otherwise, the drivers have no effect on the receivers.

In a connect module, as in regular modules, all digital ports behave like `inout` ports, whether they are coded as `inout`, `input`, or `output` ports. For example, in the following code for the connect module `c2e`, the single digital port is both read and driven, in spite of the fact that the port is defined as `input`.

```
module c2e(d,a);

input d;        // Define a digital port as input.
output a;

cmos1 d;
electrical a;

assign d = d ;  // Both read and drive the digital port.

analog          // Perform digital to analog translation.
     V(a) <+ transition( d == 1 ? 5.0 : 0.0 );
endmodule
```

To summarize the basic concepts in driver-receiver segregation:

- Every mixed net is subject to driver-receiver segregation.
- Drivers segregated from receivers by a connect module can drive signals to receivers only if the connect module propagates the signals.

© 2000-2015 All Rights Reserved.

- Digital ports in connect modules can be both read and driven, regardless of the way they are defined.

Digital Islands Limit the Range of Connect Modules

An important aspect of driver-receiver segregation has to do with the concept of *digital islands*. A digital island is the set of drivers and receivers interconnected by a purely digital net. Digital islands end at any connection to a mixed or analog net. For example, the following schematic contains three digital islands, each identified with dashed lines.

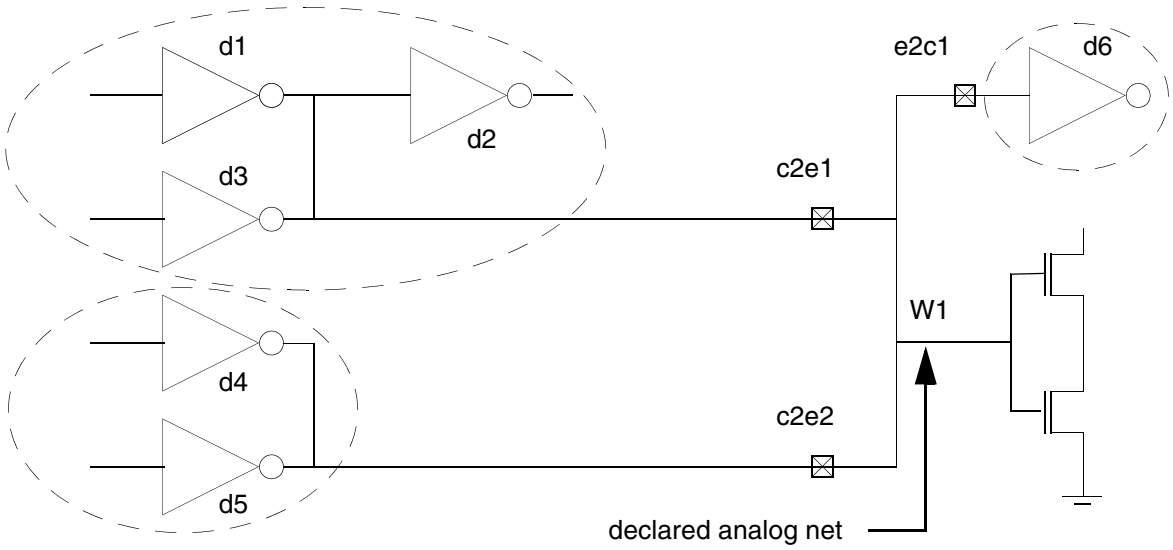

In this schematic, `e2c1`, `c2e1`, and `c2e2` are connect modules, each connecting a digital island to the analog wire, `W1`.

A connect module receives digital signals only from within the digital island isolated by the connect module and drives only the receivers located in the digital island. For example, referring to the above schematic, the digital port on the `c2e1` module receives signals only from `d1` and `d3`, which are the drivers in the digital island connected to the module. The `c2e1` module does not receive signals from `d4` and `d5`, which are located in a different digital island. Similarly, `c2e1` propagates digital values only to the receiver `d2`. The `c2e1` module does not propagate digital values to `d6`, which is in a different digital island.

Multiple Connect Modules Act Independently

In a purely digital circuit with multiple drivers, the digital value acted on by the receiver is resolved from all of the digital values written by drivers. In the following schematic, for

© 2000-2015 All Rights Reserved.

example, the Verilog-AMS simulator resolves the values written by `d3` and `d1` and propagates the result to `d2`.

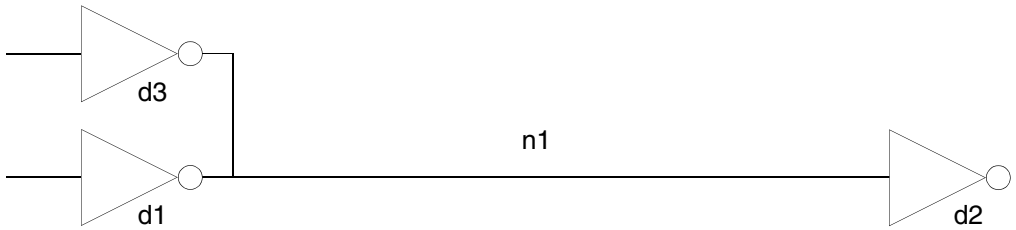

When connect modules act as drivers and receivers, however, there is another consideration: each connect module behaves as though it is the only connect module involved. For example, add an analog source and an analog capacitor to the previous schematic so that it looks like this.

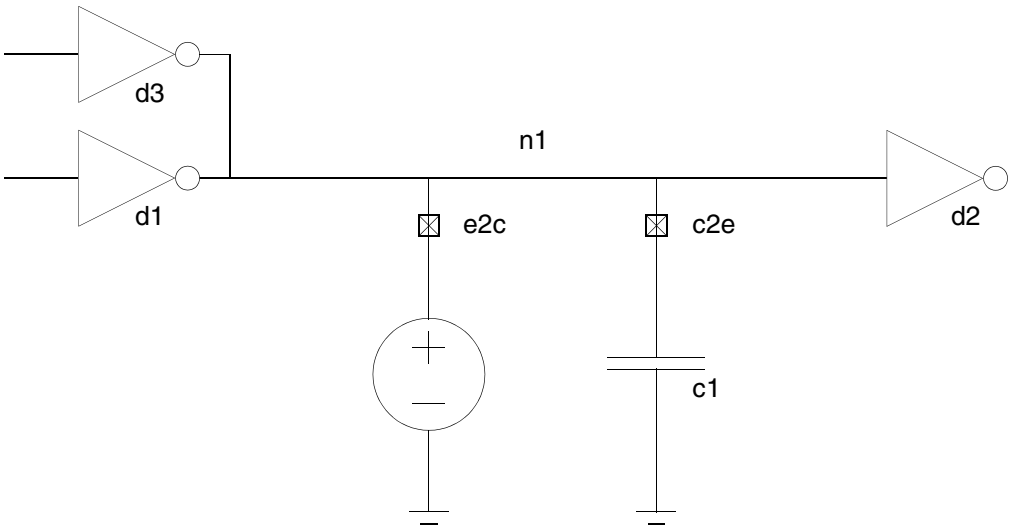

The `e2c` connect module behaves as though the `c2e` connect module does not exist, so the only drivers that affect `e2c` are the ordinary drivers `d3` and `d1`. Similarly, `c2e` is affected only by drivers `d3` and `d1`, not by any digital value that `e2c` might contribute.

The connect modules `e2c` and `c2e` both write to their digital ports as they propagate digital values from the ordinary drivers to the ordinary receivers. Again, each connect module operates independently of the other, so each one sends a digital signal. The simulator resolves the two signals and sends the resolved signal to `d2`.

The independence of connect modules is also apparent when you use the driver access functions. For example, applying the `driver_count` function to the digital port of `e2c` returns the value 2, indicating that there are two drivers associated with that signal. Similarly, applying `driver_count` to the digital port of `c2e` returns the value 2, indicating that there

© 2000-2015 All Rights Reserved.

are two drivers associated with the signal. Neither count includes the other connect module because each connect module behaves as though the other does not exist.

© 2000-2015 All Rights Reserved.

12

Controlling the Compiler

This chapter describes how to use the Cadence® Verilog®-AMS compiler directives for a range of tasks. The following compiler directives are available in Verilog-AMS. You can identify them by the initial accent grave (`) character, which is different from the single quote character (').

Compiler Directive	Task
`` `define `` `` `undef ``	"Implementing Text Macros" on page 250
`` `ifdef ``	"Compiling Code Conditionally" on page 252
`` `include ``	"Including Files at Compilation Time" on page 253
`` `timescale ``	"Adjusting the Time Scale" on page 254
`` `default_discipline ``	"Setting a Default Discrete Discipline for Signals" on page 256
`` `default_transition ``	"Setting Default Rise and Fall Times" on page 258
`` `resetall ``	"Resetting Directives to Default Values" on page 258
`` `begin_keywords `` `` `end_keywords ``	"Specifying Which Reserved Keyword List to Use" on page 259
`` `remove_keyword `` `` `restore_keyword ``	"Removing and Restoring Specific Keywords" on page 261

See also "Checking Support for Compact Modeling Extensions" on page 262 for information about a predefined macro that you can use to determine whether your simulator supports the compact modeling extensions.

© 2000-2015 All Rights Reserved.

Implementing Text Macros

By using the text macro substitution capability provided by the `` `define `` and `` `undef `` compiler directives, you can simplify your code and facilitate necessary changes. For example, you can use a text macro to represent a constant you use throughout your code. If you need to change the value of the constant, you can then change it in a single location.

`` `define Compiler Directive

Use the `` `define `` compiler directive to create a macro for text substitution.

```
text_macro_definition ::=
        `define text_macro_name macro_text

text_macro_name ::=
        text_macro_identifier[( list_of_formal_arguments ) ]

list_of_formal_arguments ::=
        formal_argument_identifier { , formal_argument_identifier }
```

macro_text is any text specified on the same line as `text_macro_name`. If *macro_text* is more than a single line in length, precede each new-line character with a backslash (****). The first new-line character not preceded by a backslash ends *macro_text*. You can include arguments from the `list_of_formal_arguments` in *macro_text*.

Subject to the restrictions in the next paragraph, you can include one-line comments in *macro_text*. If you do, the comments do not become part of the text that is substituted. *macro_text* can also be blank, in which case using the macro has no effect.

You must not split *macro_text* across comments, numbers, strings, identifiers, keywords, or operators.

text_macro_identifier is the name you want to assign to the macro. You refer to this name later when you refer to the macro. *text_macro_identifier* must not be the same as any of the compiler directive keywords but can be the same as an ordinary identifier. For example, `signal_name` and `` `signal_name `` are different.

Important

If your macro includes arguments, there must be no space between *text_macro_identifier* and the left parenthesis.

To use a macro you have created with the `` `define `` compiler directive, use this syntax:

```
text_macro_usage ::=
        `text_macro_identifier[( list_of_actual_arguments ) ]
```


© 2000-2015 All Rights Reserved.

```
list_of_actual_arguments ::=
        actual_argument { , actual_argument }

actual_argument ::=
        expression
```

text_macro_identifier is a name assigned to a macro by using the `define compiler directive. To refer to the name, precede it with the accent grave ( `) character.

Important

If your macro includes arguments, there must be no space between *text_macro_identifier* and the left parenthesis.

list_of_actual_arguments corresponds with the list of formal arguments defined with the `define compiler directive. When you use the macro, each actual argument substitutes for the corresponding formal argument.

For example, the following code fragment defines a macro named sum:

```
`define sum(a,b) ((a)+(b)) // Defines the macro
```

To use sum, you might code something like this.

```
if (`sum(p,q) > 5) begin
    c = 0 ;
end
```

The next example defines an adc with a variable delay.

```
`define var_adc(dly) adc #(dly)

`var_adc(2) g121 (q21, n10, n11) ;
`var_adc(5) g122 (q22, n10, n11) ;
```

`undef Compiler Directive

Use the `undef compiler directive to undefine a macro previously defined with the `define compiler directive.

```
undefine_compiler_directive ::=
        `undef text_macro_identifier
```

If you attempt to undefine a compiler directive that was not previously defined, the compiler issues a warning.

© 2000-2015 All Rights Reserved.

Compiling Code Conditionally

Use the `` `ifdef `` compiler directive to control the inclusion or exclusion of code at compilation time.

```
conditional_compilation_directive ::=
        `ifdef text_macro_identifier
            first_group_of_lines
        [`else
            second_group_of_lines ]
        `endif
```

`text_macro_identifier` is a Verilog-AMS identifier. `first_group_of_lines` and `second_group_of_lines` are parts of your Verilog-AMS source description.

If you defined *`text_macro_identifier`* by using the `` `define `` directive, the compiler compiles `first_group_of_lines` and ignores `second_group_of_lines`. If you did not define *`text_macro_identifier`* but you include an `` `else ``, the compiler ignores `first_group_of_lines` and compiles `second_group_of_lines`.

You can use an `` `ifdef `` compiler directive anywhere in your source description. You can, in fact, nest an `` `ifdef `` directive inside another `` `ifdef `` directive.

You must ensure that all your code, including code ignored by the compiler, follows the Verilog-AMS lexical conventions for white space, comments, numbers, strings, identifiers, keywords, and operators.

© 2000-2015 All Rights Reserved.

Including Files at Compilation Time

Use the `` `include `` compiler directive to insert the entire contents of a file into a source file during compilation.

```
include_compiler_directive ::=
        `include "file"
```

file is the full or relative path of the file you want to include in the source file. *file* can contain additional `` `include `` directives. You can add a comment after the filename.

When you use the `` `include `` compiler directive, the result is as though the contents of the included source file appear in place of the directive. For example,

```
`include "parts/resistors/standard/count.va" // Include the counter.
```

would place the entire contents of file `count.va` in the source file at the place where the `` `include `` directive is coded.

Where the compiler looks for *file* depends on whether you specify an absolute path, a relative path, or a simple filename. If the compiler does not find the file, the compiler generates an error message.

© 2000-2015 All Rights Reserved.

Adjusting the Time Scale

Use the `` `timescale `` compiler directive to specify the time unit and time precision of the modules that follow it. This directive affects only digital contexts.

```
timescale_compiler_directive ::=
        `timescale time_period / time_precision
time_period ::=
        time_integer time_unit
time_precision ::=
        time_integer time_unit
```

time_integer is one of the three integers: 1, 10, or 100.

time_unit is one of the following:

time_unit	Meaning
s	seconds
ms	milliseconds
us	microseconds
ns	nanoseconds
ps	picoseconds
fs	femtoseconds

The `time_unit` specifies the unit of measurement for time values such as the simulation time and delay values.

The `time_precision` specifies how delay values are rounded before being used in simulation. The values used in simulation are accurate to within the unit of time specified by `time_precision`. The `time_precision` you specify must be less than or equal to `time_period`. The smallest `time_precision` argument of all the `` `timescale `` compiler directives in the design determines the time unit of the simulation.

The `` `timescale `` directive sets the transition time in the `transition` filter and in Z-transform filters when neither local transition settings nor a `` `default_transition `` directive is used. However, Cadence recommends using the `` `default_transition `` directive instead.

The following example illustrates how to use the `` `timescale `` directive.

```
`timescale 1 ns / 1 ps
```


© 2000-2015 All Rights Reserved.

In this example, all time values in the modules which follow the directive are multiples of 1 ns because the `time_unit` argument is `1 ns`. Delays are rounded to a precision of one-thousandth of a nanosecond because the `time_precision` argument is `1 ps`, or one-thousandth of a nanosecond.

© 2000-2015 All Rights Reserved.

Setting a Default Discrete Discipline for Signals

Use the `` `default_discipline `` compiler directive to specify a default discrete discipline for signals that do not have an explicit discipline declaration. You must not use this directive inside a module definition.

```
default_discipline_compiler_directive ::=
        `default_discipline [ discipline_identifier [qualifier] [scope]]

qualifier ::=
    |   reg
    |   wire
    |   tri
    |   wand
    |   triand
    |   wor
    |   wreal
    |   trior
    |   trireg
    |   tri0
    |   tri1
    |   supply0
    |   supply1

scope ::=
        instance_identifier
```

`discipline_identifier` is the discrete discipline to be associated with signals that do not have explicit discipline declarations. Using the `` `default_discipline `` directive without specifying a *`discipline_identifier`* turns off the directive, so subsequent signals without a discipline are associated with the empty discipline.

`qualifier` indicates the kind of signal to be acted upon by the `` `default_discipline `` directive. If you do not specify a qualifier, the `` `default_discipline `` compiler directive is in effect for every signal that lacks an explicit discipline declaration.

`instance_identifier` is the name of a module. The `` `default_discipline `` compiler directive is effective only in the indicated module. If you do not specify a module, the `` `default_discipline `` is effective in every module.

You can have more than one `` `default_discipline `` directive in effect at a time, provided that each differs in scope, qualifier, or both. Each directive remains in effect until the compiler encounters another `` `default_discipline `` with the same combination of qualifier and scope.

For example, the following statement illustrates how to use both a qualifier and a scope.

```
`default_discipline logic trireg example1.instance5 ;
```

In the following module, the signals `in1`, `in2`, and `out` are all associated with the discipline `logic` by default.

```
`default_discipline logic // No qualifier or scope so affects all signals.
```


© 2000-2015 All Rights Reserved.

```
module behavnand(in1, in2, out);
input in1, in2;           // Not associated with any explicit discipline.
output out;
reg out;
always begin
    out = ~(in1 && in2);
end
endmodule
```


© 2000-2015 All Rights Reserved.

Setting Default Rise and Fall Times

Use the `` `default_transition `` compiler directive to specify default rise and fall times for the `transition` and Z-transform filters. This directive affects only analog contexts.

```
default_transition_compiler_directive ::=
        `default_transition transition_time
```

`transition_time` is an integer value that specifies the default rise and fall times for `transition` and Z-transform filters that do not have specified rise and fall times.

If your description includes more than one `` `default_transition `` directive, the effective rise and fall times are derived from the immediately preceding directive.

The `` `default_transition `` directive takes precedence over `` `timescale `` directives for setting the transition time in the `transition` and Z-transform transform filters when local transition settings are not provided.

If you include neither a `` `default_transition `` directive nor a `` `timescale `` directive in your description, the default rise and fall times for `transition` and Z-transform filters is `0`.

Resetting Directives to Default Values

Use the `` `resetall `` compiler directive to set all compiler directives, except the `` `timescale `` directive, to their default values.

```
resetall_compiler_directive ::=
        `resetall
```

Placing the `` `resetall `` compiler directive at the beginning of each of your source text files, followed immediately by the directives you want to use in that file, ensures that only desired directives are active.

Note: Use the `` `resetall `` directive with care because it resets the

```
`define DISCIPLINES_VAMS
```

directive in the `discipline.vams` file, which is included by most Verilog-AMS files.

© 2000-2015 All Rights Reserved.

Specifying Which Reserved Keyword List to Use

Use the `` `begin_keywords `` and `` `end_keywords `` compiler directives to specify the active reserved keyword list for the parser. With these directives, you can mix Verilog (digital) and Verilog-AMS modules, even when the Verilog code uses identifiers that are Verilog-AMS keywords.

```
begin_keywords_compiler_directive ::=
    `begin_keywords "version_specifier"

version_specifier ::=
    |1364-1995
    |1364-2001
    |1364-2005
    |1800-2005

end_keywords_compiler_directive ::=
    `end_keywords
```

Each *version_specifier* value specifies an active subset of the default keyword list. The software determines the default keyword list depending on the options you specify on the `ncvlog` or `irun` command line as follows:

Option	Default Keyword List	Active Reserved Keywords
`-v95` or `-v1995`	1364-1995	The subset of the default list that is part of the IEEE 1364-1995 standard
`-ams`	1364-2005 and the Cadence AMS keywords	The subset of the default list that appears in Appendix D, “Verilog-AMS Keywords”
`-sv31`	1800-2005	The subset of the default list that is part of the IEEE 1800-2005 standard
None of the above	1364-2005	The subset of the default list that is part of the IEEE 1364-2005 standard

You must pair each `` `begin_keywords `` directive with a `` `end_keywords `` directive. The pair of directives defines a region of source code to which a specified *version_specifier* applies. The `` `begin_keywords `` directive affects all design elements (module, primitive, configuration, paramset, connectrules, and connectmodule) that follow the directive, even across source code file boundaries, until the software encounters its matching `` `end_keywords `` directive. These directives do not affect the semantics, tokens, and other aspects of the Verilog-AMS language.

© 2000-2015 All Rights Reserved.

Note: You must not specify the `` `begin_keywords `` and `` `end_keywords `` directives inside a design element (module, primitive, configuration, paramset, connectrules, or connectmodule).

You can nest directive pairs. When the software encounters a `` `end_keywords `` directive, the compiler returns to using the *version_specifier* that was in effect prior to the matching `` `begin_keywords `` directive.

The following example shows how you might use a Verilog (digital) module together with a Verilog-AMS module in a design. The Verilog module uses a parameter called `sin`, which is a Verilog-AMS keyword. To tell the compiler not to see `sin` as a keyword, you use the `` `begin_keywords `` directive to change the active set of keywords to a set that does not include the `sin` keyword.

```
// Use IEEE Std 1364-2001 Verilog keywords. Do not use Verilog-AMS keywords.
`begin_keywords "1364-2001"

module digital_module;
parameter sin = "hello"; // Uses a Verilog-AMS keyword as an identifier.
                         // sin is not a keyword in 1364-2001.
initial begin
    $strobe("%s",sin);
end
endmodule

// Restore the Verilog-AMS keywords now.
`end_keywords
```

Here is another similar example:

```
`begin_keywords "1364-2005" // Use IEEE Std 1364-2005 Verilog keywords.
module m2 (sin ...);
input sin // Uses Verilog-AMS keyword sin as a port name.
          // sin is not a keyword in 1364-2005.
...
endmodule
`end_keywords
```

The following example shows a definition of module `m1` that does not have a `` `begin_keywords `` directive before it. Without this directive, the set of reserved keywords in effect for this module is the default set of reserved keywords for Cadence's implementation of Verilog-AMS.

```
module m1; // module definition with no `begin_keywords directive
...
endmodule
```


© 2000-2015 All Rights Reserved.

Removing and Restoring Specific Keywords

You can use the `` `remove_keyword `` and `` `restore_keyword `` compiler directives to remove and restore specific keywords from the set of reserved keywords that the parser recognizes.

You might use the `` `remove_keyword `` directive to remove one or more specific keywords from the set of reserved keywords you specify using the`` `begin_keywords `` and `` `end_keywords `` compiler directives.

You can also use the `-rmkeyword` command-line option (for `ncvlog` or `irun`) in a similar fashion.

© 2000-2015 All Rights Reserved.

Checking Support for Compact Modeling Extensions

Use the `__VAMS_COMPACT_MODELING__` macro to determine whether the simulator supports the compact modeling extensions. The AMS Designer simulator supports these extensions and sets the value of this macro to `t`.

```
VAMS_COMPACT_MODELING_macro_call::=
        `ifdef __VAMS_COMPACT_MODELING__
```

The `__VAMS_COMPACT_MODELING__` macro is predefined, so all you need to do is reference the macro name. (Notice the double underscore characters at both the beginning and the end of the macro name.) The returned value is `t` if the simulator supports the compact modeling extensions, which are:

- Attributes consistent with *Verilog-AMS Language Reference Manual* version 1364-2001
- Output variables
- Attributes for parameter descriptions and units (`desc`, `units`)
- Net descriptions
- Modules (module description attribute)
- String parameters
- Parameter aliases
- Environment parameter functions (`$simparam`)
- Derivative operator (`ddx`)
- Limiting function (`%limit`)
- Hierarchy detections functions (`$param_given`)
- Display tasks (`$debug`)
- Format specifications (`%r`, `%R`)
- Local parameters (`localparam`)

If the simulator does not support the compact modeling extensions, the returned value is `nil`.

© 2000-2015 All Rights Reserved.

A

Nodal Analysis

This appendix briefly introduces Kirchhoff's Laws and describes how the simulator uses them to simulate an analog system. For information, see

- Kirchhoff's Laws on page 264
- Simulating an Analog System on page 265

© 2000-2015 All Rights Reserved.

Kirchhoff's Laws

Simulation of the analog content of Verilog®-AMS language modules is based on two sets of relationships. The first set, called the *constitutive relationships*, consists of formulas that describe the behavior of each component. Some formulas are supplied as built-in primitives. You provide other formulas in the form of module definitions.

The second set of relationships, the *interconnection relationships*, describes the structure of the network. This set, which contains information on how the nodes of the components are connected, is independent of the behavior of the constituent components. Kirchhoff's laws provide the following properties relating the quantities present on the nodes and on the branches that connect the nodes.

- Kirchhoff's Flow Law

  The algebraic sum of all the flows out of a node at any instant is zero.

- Kirchhoff's Potential Law

  The algebraic sum of all the branch potentials around a loop at any instant is zero.

These laws assume that a node is infinitely small so that there is negligible difference in potential between any two points on the node and a negligible accumulation of flow.

Kirchhoff's Laws

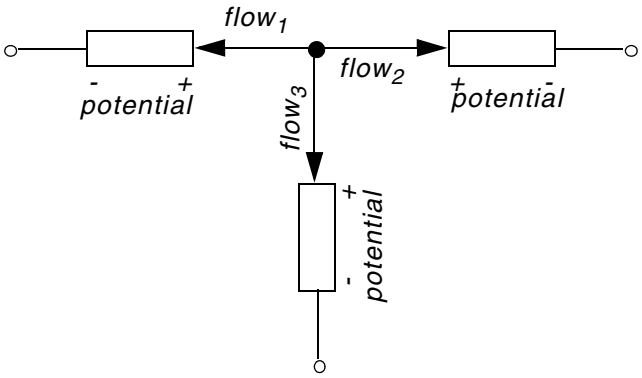

Kirchhoff's Flow Law

$flow_1 + flow_2 + flow_3 = 0$

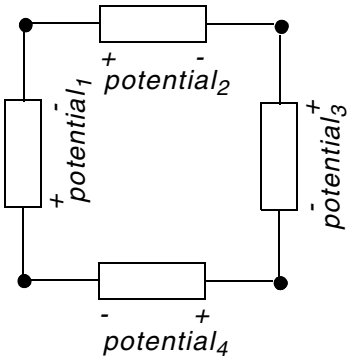

Kirchhoff's Potential Law

$potential_1 + potential_2 + potential_3 + potential_4 = 0$

© 2000-2015
All Rights Reserved.

Simulating an Analog System

To describe an analog network, simulators combine constitutive relationships with Kirchhoff's laws in *nodal analysis* to form a system of differential-algebraic equations of the form

$$f(v,\ t) = \frac{dq(v,\ t)}{dt} + i(v,\ t) = 0$$

$$v(0) = v_0$$

These equations are a restatement of Kirchhoff's Flow Law.

v is a vector containing all node potentials.

t is time.

q and *i* are the dynamic and static portions of the flow.

f is a vector containing the total flow out of each node.

v_0 is the vector of initial conditions.

Transient Analysis

The equation describing the network is differential and nonlinear, which makes it impossible to solve directly. There are a number of different approaches to solving this problem numerically. However, all approaches break time into increments and solve the nonlinear equations iteratively.

The simulator replaces the time derivative operator (`dq/dt`) with a discrete-time finite difference approximation. The simulation time interval is discretized and solved at individual time points along the interval. The simulator controls the interval between the time points to ensure the accuracy of the finite difference approximation. At each time point, the simulator solves iteratively a system of nonlinear algebraic equations. Like most circuit simulators, the AMS Designer simulator uses the Newton-Raphson method to solve this system.

Convergence

In Verilog-AMS, the analog behavioral description is evaluated iteratively until the Newton-Raphson method converges. (For a graphical representation of this process, see "Simulator Flow for Analog Systems" on page 28.) On the first iteration, the signal values used in Verilog-AMS expressions are approximate and do not satisfy Kirchhoff's laws.

In fact, the initial values might not be reasonable; so you must write models that do something reasonable even when given unreasonable signal values.

© 2000-2015 All Rights Reserved.

For example, if you compute the log or square root of a signal value, some signal values cause the arguments to these functions to become negative, even though a real-world system never exhibits negative values.

As the iteration progresses, the signal values approach the solution. Iteration continues until two convergence criteria are satisfied. The first criterion is that the proposed solution on this iteration, $v^{(j)}(t)$, must be close to the proposed solution on the previous iteration, $v^{(j-1)}(t)$, and

$$\left| v_n^{(j)} - v_n^{(j-1)} \right| < reltol\left(max\left(\left| v_n^{(j)} \right|, \left| v_n^{(j-1)} \right| \right) \right) + abstol$$

where `reltol` is the relative tolerance and `abstol` is the absolute tolerance.

`reltol` is set as a simulator option and typically has a value of 0.001. There can be many absolute tolerances, and which one is used depends on the resolved discipline of the net. You set absolute tolerances by specifying the `abstol` attribute for the natures you use. The absolute tolerance is important when v_n is converging to zero. Without `abstol`, the iteration never converges.

The second criterion ensures that Kirchhoff's Flow Law is satisfied:

$$\left| \sum_n f_n(v^{(j)}) \right| < reltol(max(\left| f^i_n(v^{(j)}) \right|)) + abstol$$

where $f_n^i(v^{(j)})$ is the flow exiting node `n` from branch `i`.

Both of these criteria specify the absolute tolerance to ensure that convergence is not precluded when v_n or $f_n(v)$ go to zero. While you can set the relative tolerance once in an options statement in the analog simulation control file (`.scs`) to work effectively on any node in the circuit, you must scale the absolute tolerance appropriately for the associated branches. Set the absolute tolerance to be the largest value that is negligible on all the branches with which it is associated.

The simulator uses absolute tolerance to get an idea of the scale of signals. Absolute tolerances are typically 1,000 to 1,000,000 times smaller than the largest typical value for signals of a particular quantity. For example, in a typical integrated circuit, the largest potential is about 5 volts; so the default absolute tolerance for voltage is 1 µV. The largest current is about 1 mA; so the default absolute tolerance for current is 1 pA.

© 2000-2015 All Rights Reserved.

B

Analog Probes and Sources

This appendix describes what analog probes and sources are and gives some examples of using them. For information, see

- Probes on page 268
- Port Branches on page 268
- Sources on page 269

For examples, see

- Linear Conductor on page 273
- Linear Resistor on page 274
- RLC Circuit on page 274
- Simple Implicit Diode on page 274

© 2000-2015 All Rights Reserved.

Overview of Probes and Sources

A *probe* is a branch in which no value is assigned for either the potential or the flow, anywhere in the module. A *source* is a branch in which either the potential or the flow is assigned a value by a contribution statement somewhere in the module.

You might find it useful to describe component behavior as a network of probes and sources.

- It is sometimes easier to describe a component first as a network of probes and sources, and then use the rules presented here to map the network into a behavioral description.
- A complex behavioral description is sometimes easier to understand if it is converted into a network of probes and sources.

The probe and source interpretation provides the additional benefit of unambiguously defining what the response will be when you manipulate a signal.

Probes

A *flow probe* is a branch in which the flow is used in an expression somewhere in the module. A *potential probe* is a branch in which the potential is used. You must not measure both the potential and the flow of a probe branch.

The equivalent circuit model for a potential probe is

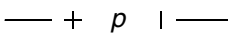

The branch flow of a potential probe is zero.

The equivalent circuit model for a flow probe is

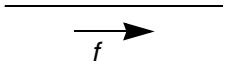

The branch potential of a flow probe is zero.

Port Branches

You can use the port access function to monitor the flow into the port of a module. The name of the access function is derived from the flow nature of the discipline of the port and you use the `(<>)` operator to delimit the port name. For example, `I(<a>)` accesses the current through module port `a`.

© 2000-2015 All Rights Reserved.

A port branch, which is a special form of a flow probe, measures the flow into a port rather than across a branch. When a port is connected to numerous branches, using a port branch provides a quick way of summing the flow.

The expression `V(<a>)` is invalid for ports and nets, where `V` is a potential access function. The port branch probe `I(<a>)` cannot be used on the left side of a contribution operator <+. As a result of these restrictions, you cannot use port branches to create behavioral resistors, capacitors, and inductors.

In the following example, the simulator issues a warning if the current through the diode becomes too large.

```
module diode (a, c) ;
electrical a, c ;
branch (a, c) diode, cap ;
parameter real is=1e-14, tf=0, cjo=0, imax=1, phi=0.7 ;

analog begin
    I(diode) <+ is*(limexp(V(diode)/$vt) - 1) ;
    I(cap) <+ ddt(tf*I(diode) - 2 * cjo * sqrt(phi * (phi * V(cap)))) ;
    if (I(<a>) > imax) // Checks current through port
        $strobe( "Warning: diode is melting!" ) ;
    end
endmodule
```

Sources

A *potential source* is a branch in which the potential is assigned a value by a contribution statement somewhere in the module. A *flow source* is a branch in which the flow is assigned a value. A branch cannot simultaneously be both a potential and a flow source, although it can switch between the two kinds. For additional information, see “Switch Branches” on page 271.

© 2000-2015 All Rights Reserved.

The circuit model for a potential source branch shows that you can obtain both the flow and the potential for a potential source branch.

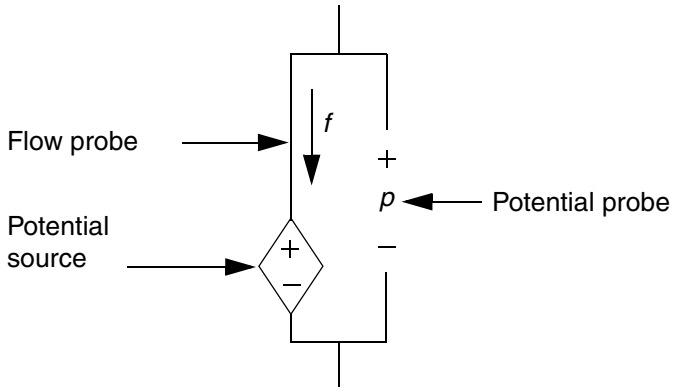

Similarly, the circuit model for a flow source branch shows that you can obtain the flow and potential for a flow source branch.

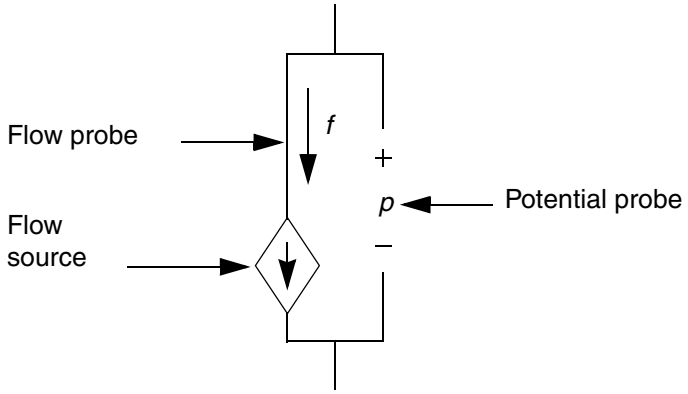

With the flow and potential sources, you can model the four basic controlled sources, using node or branch declarations and contribution statements like those in the following code fragments.

The model for a *voltage-controlled voltage source* is

```
branch (ps,ns) in, (p,n) out;
V(out) <+ A * V(in);
```

The model for a *voltage-controlled current source* is

```
branch (ps,ns) in, (p,n) out;
I(out) <+ A * V(in);
```

The model for a *current-controlled voltage source* is

```
branch (ps,ns) in, (p,n) out;
V(out) <+ A * I(in);
```


© 2000-2015 All Rights Reserved.

The model for a *current-controlled current source* is

```
branch (ps,ns) in, (p,n) out;
I(out) <+ A * I(in);
```

Unassigned Sources

If you do not assign a value to a branch, the branch flow, by default, is set to zero. In the following fragment, for example, when `closed` is true, `V(p,n)` is set to zero. When `closed` is false, the current `I(p,n)` is set to zero.

```
if (closed)
    V(p,n) <+ 0 ;
else
    I(p,n) <+ 0 ;
```

Alternatively, you could achieve the same result with

```
if (closed)
    V(p,n) <+ 0 ;
```

This code fragment also sets `V(p,n)` to zero when `closed` is true. When `closed` is false, the current is set to zero by default.

Switch Branches

Switch branches are branches that change from source potential branches into source flow branches, and vice versa. Switch branches are useful when you want to model ideal switches or mechanical stops.

To switch a branch to being a potential source, assign to its potential. To switch a branch to being a flow source, assign to its flow. The circuit model for a switch branch illustrates the

© 2000-2015 All Rights Reserved.

effect, with the position of the switch dependent upon whether you assign to the potential or to the flow of the branch.

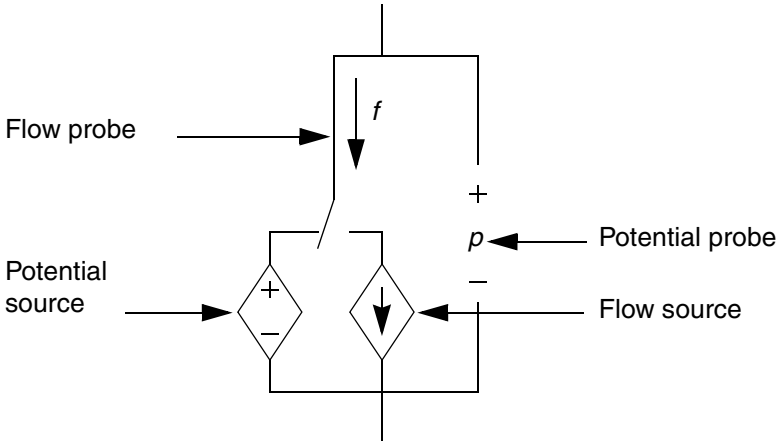

As an example of a switch branch, consider the module `idealRelay`.

```
module idealRelay (pout, nout, psense, nsense) ;
input psense, nsense ;
output pout, nout ;
electrical pout, nout, psense, nsense ;
parameter real thresh = 2.5 ;
analog begin
    if (V(psense, nsense) > thresh)
        V(pout, nout) <+ 0.0 ; // Becomes potential source
    else
        I(pout, nout) <+ 0.0 ; // Becomes flow source
    end
endmodule
```

The simulator assumes that a discontinuity of order zero occurs whenever the branch switches; so you do not have to use the discontinuity function with switch branches. For more information about the discontinuity function, see “Announcing Discontinuity” on page 127.

Contributing a flow to a branch that already has a value retained for the potential results in the potential being discarded and the branch being converted to a flow source. Conversely, contributing a potential to a branch that already has a value retained for the flow results in the flow being discarded and the branch being converted to a potential source. For example, in the following code, each of the contribution statements is discarded when the next is encountered.

```
analog begin
   V(out) <+ 1.0; // Discarded
   I(out) <+ 1.0; // Discarded
   V(out) <+ 1.0;
end
```

In the next example,

© 2000-2015 All Rights Reserved.

```
I(out) <+ 1.0;
V(out) <+ I(out);
```

the result of `V(out)` is not 1.0. Instead, these two statements are equivalent to

```
// I(out) <+ 1.0;
V(out) <+ I(out);
```

because the flow contribution is discarded. The simulator reminds you of this behavior by issuing a warning similar to the following,

```
The statement on line 12 contributes either a potential to a flow source or a flow
to a potential source. To match the requirements of value retention, the statement
is ignored.
```

Examples of Sources and Probes

The following examples illustrate how to construct models using sources and probes.

Linear Conductor

The model for a linear conductor is

```
Module myconductor(p,n) ;
parameter real G=1 ;
electrical p,n ;
branch (p,n) cond ;
analog begin
    I(cond) <+ G * V(cond);
end
endmodule
```

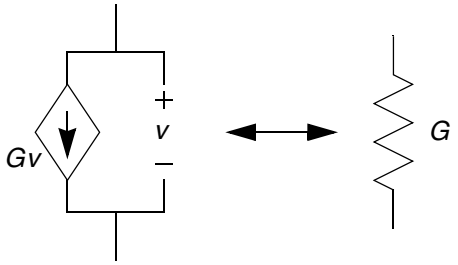

The contribution to `I(cond)` makes `cond` a current (flow) source branch, and `V(cond)` accesses the potential probe built into the current source branch.

© 2000-2015
All Rights Reserved.

Linear Resistor

The model for a linear resistor is

```
module myresistor(p,n) ;
parameter real R=1 ;
electrical p,n;
branch (p,n) res ;
analog begin
    V(res) <+ R * I(res);
end
endmodule
```

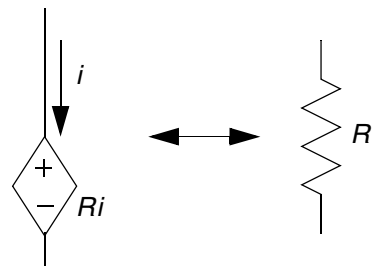

The contribution to `V(res)` makes `res` a potential source branch. `I(res)` accesses the flow probe built into the potential source branch.

RLC Circuit

A series RLC circuit is formulated by summing the voltage across the three components.

$$v(t) = Ri(t) + L\frac{d}{dt}i(t) + \frac{1}{C}\int_{-\infty}^{t} i(\tau)d\tau$$

To describe the series RLC circuit with probes and sources, you might write

```
V(p,n) <+ R*I(p,n) + L*ddt(I(p,n)) + idt(I(p,n))/C ;
```

A parallel RLC circuit is formulated by summing the currents through the three components.

$$i(t) = \frac{v(t)}{R} + C\frac{d}{dt}v(t) + \frac{1}{L}\int_{-\infty}^{t} v(\tau)d\tau$$

To describe the parallel RLC circuit, you might code

```
I(p,n) <+ V(p,n)/R + C*ddt(V(p,n)) + idt(V(p,n))/L ;
```

Simple Implicit Diode

This example illustrates a case where the model equation is implicit. The model equation is implicit because the current `I(a,c)` appears on both sides of the contribution operator. The equation specifies the current of the branch, making it a flow source branch. In addition, both the voltage and the current of the branch are used in the behavioral description.

```
I(a,c) <+ is * (limexp((V(a,c) - rs * I(a,c)) / Vt) - 1) ;
```


© 2000-2015 All Rights Reserved.

C

Sample Model Library

This appendix discusses the Sample Model Library, which is included with this product. The library contains the following types of components:

- Analog Components on page 277
- Basic Components on page 294
- Control Components on page 302
- Logic Components on page 310
- Electromagnetic Components on page 330
- Functional Blocks on page 333
- Magnetic Components on page 356
- Mathematical Components on page 360
- Measure Components on page 377
- Mechanical Systems on page 397
- Mixed-Signal Components on page 404
- Power Electronics Components on page 413
- Semiconductor Components on page 416
- Telecommunications Components on page 424

You can use these models as they are, you can copy them and modify them to create new parts, or you can use them as examples. The models are in the following directory in the software hierarchy:

```
$CDSHOME/tools/dfII/samples/artist/spectreHDL/Verilog-A
```

Refer to the README file in this directory for a list of the files containing the models. The filenames have the suffix `.va`. For example, the model for the switch is located in `sw.va`.

© 2000-2015 All Rights Reserved.

Each model has an associated test circuit that can be used to simulate the model. The test circuits can be found in the test directory.

These models are also integrated into a Cadence® design framework II library, complete with symbols and Component Description Formats (CDFs). If you are using the Cadence analog design environment, you can access these models by adding the following library to your library path:

your_install_dir/tools/dfII/samples/artist/ahdlLib

This appendix provides a list of the parts and functions in the sample library. They are grouped according to application.

In the terminal description and parameter descriptions, the letters between the square brackets, such as [V,A] and [V], refer to the units associated with the terminal or parameter. V means volts, A means amps. (val, flow) means that any units can be used.

© 2000-2015 All Rights Reserved.

Analog Components

Analog Multiplexer

Terminals

`vin1`, `vin2`: [V,A]

`vsel`: selection voltage [V,A]

`vout`: [V,A]

Description

When `vsel` > `vth`, the output voltage follows `vin1`.

When `vsel` < `vth`, the output voltage follows `vin2`.

Instance Parameters

`vth` = 1->0 threshold voltage for the selection line [V]

© 2000-2015 All Rights Reserved.

Current Deadband Amplifier

Terminals

`iin_p`, `iin_n`: differential input current terminals [V,A]

`iout`: output current terminal [V,A]

Description

Outputs `ileak` when differential input current (`iin_p` - `iin_n`) is between `idead_low` and `idead_high`. When outside the deadband, the output current is an amplified version of the differential input current plus `ileak`.

Instance Parameters

`idead_low` = lower range of dead band [A]

`idead_high` = upper range of dead band [A]

`ileak` = offset current; only output in deadband [A]

`gain_low` = differential current gain in lower region []

`gain_high` = differential current gain in lower region []

© 2000-2015 All Rights Reserved.

Hard Current Clamp

Terminals

`vin`: input terminal [V,A]

`vout`: output terminal [V,A]

`vgnd`: gnd terminal [V,A]

Description

Hard limits output current to between `iclamp_upper` and `iclamp_lower` of the input current.

Instance Parameters

`iclamp_upper` = upper clamping current [A]

`iclamp_lower` = lower clamping current [A]

© 2000-2015 All Rights Reserved.

Hard Voltage Clamp

Terminals

`vin`: input terminal [V,A]

`vout`: output terminal [V,A]

`vgnd`: gnd terminal [V,A]

Description

`vout`- `vgnd` hard clamped/limited to between `vclamp_upper` and `vclamp_lower` of `vin` - `vgnd`.

Instance Parameters

`vclamp_upper` = upper clamping voltage [A]

`vclamp_lower` = lower clamping voltage [A]

© 2000-2015 All Rights Reserved.

Open Circuit Fault

Terminals

`vp`, `vn`: output terminals [V,A]

Description

At time=`twait`, the connection between the two terminals is opened. Before this, the connection between the terminals is closed.

Instance Parameters

`twait` = time to wait before open fault happens [s]

© 2000-2015 All Rights Reserved.

Operational Amplifier

Terminals

`vin_p`, `vin_n`: differential input voltage [V,A]

`vout`: output voltage [V,A]

`vref`: reference voltage [V,A]

`vspply_p`: positive supply voltage [V,A]

`vspply_n`: negative supply voltage [V,A]

Instance Parameters

`gain` = gain []

`freq_unitygain` = unity gain frequency [Hz]

`rin` = input resistance [Ohms]

`vin_offset` = input offset voltage referred to negative [V]

`ibias` = input current [A]

`iin_max` = maximum current [A]

`rsrc` = source resistance [Ohms]

`rout` = output resistance [Ohms]

`vsoft` = soft output limiting value [V]

© 2000-2015 All Rights Reserved.

Constant Power Sink

Terminals

`vp`, `vn`: terminals [V,A]

Description

Normally `power` watts of power is sunk. If the absolute value of `vp` - `vn` is above `vabsmin`, a faction of the `power` is sunk. The fraction is the ratio of `vp` - `vn` to `vabsmin`.

Instance Parameters

`power` = power sunk [Watts]

`vabsmin` = absolute value of minimum input voltage [V]

© 2000-2015 All Rights Reserved.

Short Circuit Fault

Terminals

`vp`, `vn`: output terminals [V,A]

Description

At time=`twait`, the two terminals short. Before this, the connection between the terminals is open.

Instance Parameters

`twait` = time to wait before short circuit occurs [s]

© 2000-2015 All Rights Reserved.

Soft Current Clamp

Terminals

`vin`: input terminal [V,A]

`vout`: output terminal [V,A]

`vgnd`: gnd terminal [V,A]

Description

Limits output current to between `iclamp_upper` and `iclamp_lower` of the input current.

The limiting starts working once the input current gets near `iclamp_lower` or `iclamp_upper`. The clamping acts exponentially to ensure smoothness.

The fraction of the range (`iclamp_lower`, `iclamp_upper`) over which the exponential clamping action occurs is `exp_frac`.

Excess current coming from `vin` is routed to `vgnd`.

Instance Parameters

`iclamp_upper` = upper clamping current [A]

`iclamp_lower` = lower clamping current [A]

`exp_frac` = fraction of iclamp range from `iclamp_upper` and `iclamp_lower` at which exponential clamping starts to have an effect []

© 2000-2015 All Rights Reserved.

Soft Voltage Clamp

Terminals

`vin`: input terminal [V,A]

`vout`: output terminal [V,A]

`vgnd`: gnd terminal [V,A]

Description

`vout`- `vgnd` clamped/limited to between `vclamp_upper` and `vclamp_lower` of `vin` - `vgnd`.

The limiting starts working once the input voltage gets near `vclamp_lower` or `vclamp_upper`. The clamping acts exponentially to ensure smoothness.

The fraction of the range (`vclamp_lower`, `vclamp_upper`) over which the exponential clamping action occurs is `exp_frac`.

Instance Parameters

`vclamp_upper` = upper clamping voltage [A]

`vclamp_lower` = lower clamping voltage [A]

`exp_frac` = fraction of vclamp range from `vclamp_upper` and `vclamp_lower` at which exponential clamping starts to have an effect []

© 2000-2015 All Rights Reserved.

Self-Tuning Resistor

Terminals

`vp`, `vn`: terminals [V,A]

`vtune`: the voltage that is being tuned [V,A]

`verr`: the error in `vtune` [V,A]

Description

This element operates in four distinct phases:

1. It waits for `tsettle` seconds with the resistance between `vp` and `vn` set to `rinit`.
2. For `tdir_check` seconds, it attempts to tune the error away by increasing the resistance in proportion to the size of the error.
3. It waits for `tsettle` seconds with the resistance between `vp` and `vn` set to `rinit`.
4. For `tdir_check` seconds, it attempts to tune the error away by decreasing the resistance in proportion to the error.
5. Based on the results of (2) and (4), it selects which direction is better to tune in and tunes as best it can using integral action. For certain systems, this might lead to unstable behavior.

Note: Select `tsettle` to be greater than the largest system time constant. Select `rgain` so that the positive feedback is not excessive during the direction sensing phases. Select `tdir_check` so that the system has enough time to react but not so big that the resistance drifts too far from `rinit`. It is better if it can be arranged that `verr` does not change sign during tuning.

Instance Parameters

`rmax` = maximum resistance that tuning res can have [Ohms]

`rmin` = minimum resistance that tuning res can have [Ohms]

`rinit` = initial resistance [Ohms]

`rgain` = gain of integral tuning action [Ohms/(Vs)]

© 2000-2015 All Rights Reserved.

`vtune_set` = value that `vtune` must be tuned to [V]

`tsettle` = amount of time to wait before tuning begins [s]

`tdir_check` = amount of time to spend checking each tuning direction [s]

© 2000-2015 All Rights Reserved.

Untrimmed Capacitor

Terminals

`vp`, `vn`: terminals [V,A]

Description

Each instance has a randomly generated value of capacitance, which is calculated at initialization. The distribution of these random values is gaussian (that is, normal) with a `c_mean` and a standard deviation of `c_std`.

Two seeds are needed to generate the gaussian distribution.

Instance Parameters

`c_mean` = mean capacitance [Ohms]

`c_dev` = standard deviation of capacitance [Ohms]

`seed1` = first seed value for randomly generating capacitance values []

`seed2` = second seed value for randomly generating capacitance values []

`show_val` = option to print the value of capacitance to stdout

© 2000-2015 All Rights Reserved.

Untrimmed Inductor

Terminals

`vp`, `vn`: terminals [V,A]

Description

Each instance has a randomly generated value of inductance, which is calculated at initialization. The distribution of these random values is gaussian (that is, normal) with an `l_mean` and a standard deviation of `l_std`.

Two seeds are needed to generate the gaussian distribution.

Instance Parameters

`l_mean` = mean inductance [Ohms]

`l_dev` = standard deviation of inductance [Ohms]

`seed1` = first seed value for randomly generating inductance values []

`seed2` = second seed value for randomly generating inductance values []

`show_val` = option to print the value of inductance to stdout

© 2000-2015 All Rights Reserved.

Untrimmed Resistor

Terminals

`vp`, `vn`: terminals [V,A]

Description

Each instance has a randomly generated value of resistance, which is calculated at initialization. The distribution of these random values is gaussian (that is, normal) with an `r_mean` and a standard deviation of `r_std`.

Two seeds are needed to generate the gaussian distribution.

Instance Parameters

`r_mean` = mean resistance [Ohms]

`r_dev` = standard deviation of resistance [Ohms]

`seed1` = first seed value for randomly generating resistance values []

`seed2` = second seed value for randomly generating resistance values []

`show_val` = option to print the value of resistance to stdout

© 2000-2015 All Rights Reserved.

Voltage Deadband Amplifier

Terminals

`vin_p`, `vin_n`: differential input voltage terminals [V,A]

`vout`: output voltage terminal [V,A]

Description

Outputs `vleak` when differential input voltage (`vin_p`-`vin_n`) is between `vdead_low` and `vdead_high`. When outside the deadband, the output voltage is an amplified version of the differential input voltage plus `vleak`.

Instance Parameters

`vdead_low` = lower range of dead band [V]

`vdead_high` = upper range of dead band [V]

`vleak` = offset voltage; only output in deadband [V]

`gain_low` = differential voltage gain in lower region []

`gain_high` = differential voltage gain in upper region []

© 2000-2015 All Rights Reserved.

Voltage-Controlled Variable-Gain Amplifier

Terminals

`vin_p`, `vin_n`: differential input terminals [V,A]

`vctrl_p`, `vctrl_n`: differential-controlling voltage terminals [V,A]

`vout`: [V,A]

Description

When there is no input offset voltage, the output is `vout` = `gain_const` * (`vctrl_p` - `vctrl_n`) * (`vin_p` - `vin_n`) + (`vout_high` + `vout_low`)/2.

When there is an input offset voltage, `vin_offset` is subtracted from (`vin_p` - `vin_n`).

Instance Parameters

`gain_const` = amplifier gain when (`vctrl_p` - `vctrl_n`) = 1 volt []

`vout_high` = upper output limit [V]

`vout_low` = lower output limit [V]

`vin_offset` = input offset [V]

© 2000-2015 All Rights Reserved.

Basic Components

Resistor

Terminals

`vp`, `vn`: terminals (V,A)

Instance Parameters

`r` = resistance (Ohms)

© 2000-2015 All Rights Reserved.

Capacitor

Terminals

`vp`, `vn`: terminals (V,A)

Instance Parameters

`c` = capacitance (F)

© 2000-2015 All Rights Reserved.

Inductor

Terminals

`vp`, `vn`: terminals (V,A)

Instance Parameters

`l` = inductance (H)

© 2000-2015 All Rights Reserved.

Voltage-Controlled Voltage Source

Terminals

`vout_p`, `vout_n`: controlled voltage terminals [V,A]

`vin_p`, `vin_n`: controlling voltage terminals [V,A]

Instance Parameters

`gain` = voltage gain []

© 2000-2015 All Rights Reserved.

Current-Controlled Voltage Source

Terminals

`vout_p`, `vout_n`: controlled voltage terminals [V,A]

`iin_p`, `iin_n`: controlling current terminals [V,A]

Instance Parameters

`rm` = resistance multiplier (V to I gain) [Ohms]

© 2000-2015 All Rights Reserved.

Voltage-Controlled Current Source

Terminals

`iout_p`, `iout_n`: controlled current source terminals [V,A]

`vin_p`, `vin_n`: controlling voltage terminals [V,A]

Instance Parameters

`gm` = conductance multiplier (V to I gain) [Mhos]

© 2000-2015 All Rights Reserved.

Current-Controlled Current Source

Terminals

`iout_p`, `iout_n`: controlled current terminals [V,A]

`iin_p`, `iin_n`: controlling current terminals [V,A]

Instance Parameters

`gain` = current gain []

© 2000-2015 All Rights Reserved.

Switch

Terminals

`vp`, `vn`: output terminals [V,A]

`vctrlp`, `vctrln`: control terminals [V,A]

Description

If (`vctrlp` - `vctrln` > `vth`), the branch between `vp` and `vn` is shorted. Otherwise, the branch between `vp` and `vn` is opened.

Instance Parameters

`vth` = threshold voltage [V]

© 2000-2015 All Rights Reserved.

Control Components

Error Calculation Block

Terminals

`sigset`: setpoint signal (val, flow)

`sigact`: actual value signal (val, flow)

`sigerr`: error: difference between signals (val, flow)

Description

`sigerr` = `sigset` - `sigact`

Note: Defining larger values of `abstol` and `huge` for the quantities associated with `sigin` and `sigout` can help overcome convergence and clipping problems.

Instance Parameters

`tdel`, `trise`, `tfall` = {usual}

© 2000-2015 All Rights Reserved.

Lag Compensator

Terminals

`sigin`: (val, flow)

`sigout`: (val, flow)

Description

$$TF = gain \times alpha \times \frac{1 + tau \times S}{1 + alpha \times tau \times S}$$

Note: Defining larger values of `abstol` and `huge` for the quantities associated with `sigin` and `sigout` can help overcome convergence and clipping problems.

Instance Parameters

`gain` = compensator gain []

`tau` = compensator zero at -(1/`tau`) [s]

`alpha` = compensator pole at -(1/(`alpha`*`tau`)); `alpha` > 1 []

© 2000-2015 All Rights Reserved.

Lead Compensator

Terminals

`sigin`: (val, flow)

`sigout`: (val, flow)

Description

$$TF = gain \times alpha \times \frac{1 + tau \times S}{1 + alpha \times tau \times S}$$

Note: Defining larger values of `abstol` and `huge` for the quantities associated with `sigin` and `sigout` can help overcome convergence and clipping problems.

Instance Parameters

`gain` = compensator gain []

`tau` = compensator zero at -(1/`tau`) [s]

`alpha` = compensator pole at -(1/(`alpha`*`tau`)); `alpha` < 1 []

© 2000-2015 All Rights Reserved.

Lead-Lag Compensator

Terminals

`sigin`: (val, flow)

`sigout`: (val, flow)

Description

$$TF = gain \times alpha1 \times \frac{1 + tau1 \times S}{1 + alpha1 \times tau1 \times S} \times alpha2 \times \frac{1 + tau2 \times S}{1 + alpha2 \times tau2 \times S}$$

Defining larger values of `abstol` and `huge` for the quantities associated with `sigin` and `sigout` can help overcome convergence and clipping problems.

Instance Parameters

`gain` = compensator gain []

`tau1` = compensator zero at -(1/`tau1`) [s]

`alpha1` = compensator pole at -(1/(`alpha`*`tau1`)); `alpha1` > 1 []

`tau2` = compensator zero at -(1/`tau2`) [s]

`alpha2` = compensator pole at -(1/(`alpha`*`tau2`)); `alpha2` < 1 []

© 2000-2015 All Rights Reserved.

Proportional Controller

Terminals

`sigin`: (val, flow)

`sigout`: (val, flow)

Description

`sigout` = `kp`*`sigin`

Note: Defining larger values of `abstol` and `huge` for the quantities associated with `sigin` and `sigout` can help overcome convergence and clipping problems.

Instance Parameters

`kp` = proportional gain []

© 2000-2015 All Rights Reserved.

Proportional Derivative Controller

Terminals

`sigin`: (val, flow)

`sigout`: (val, flow)

Description

`sigout` = `kp`*`sigin` + `kd`* dot (`sigin`)

Note: Defining larger values of `abstol` and `huge` for the quantities associated with `sigin` and `sigout` can help overcome convergence and clipping problems.

Instance Parameters

`kp` = proportional gain []

`kd` = differential gain []

© 2000-2015 All Rights Reserved.

Proportional Integral Controller

Terminals

`sigin`: (val, flow)

`sigout`: (val, flow)

Description

This model is a proportional, integral, and derivative controller.

`sigout` = `kp` * `sigin` + `ki` * `integ` (`sigin`) + `kd`* `dot` (`sigin`)

Note: Defining larger values of `abstol` and `huge` for the quantities associated with `sigin` and `sigout` can help overcome convergence and clipping problems.

Instance Parameters

`kp` = proportional gain []

`ki` = integral gain []

© 2000-2015 All Rights Reserved.

Proportional Integral Derivative Controller

Terminals

`sigin`: (val, flow)

`sigout`: (val, flow)

Description

`sigout` = `kp` * `sigin` + `ki` * `integ` (`sigin`) + `kd`* `dot` (`sigin`)

Note: Defining larger values of `abstol` and `huge` for the quantities associated with `sigin` and `sigout` can help overcome convergence and clipping problems.

Instance Parameters

`kp` = proportional gain []

`ki` = integral gain []

`kd` = differential gain []

© 2000-2015 All Rights Reserved.

Logic Components

AND Gate

Terminals

`vin1`, `vin2`: [V,A]

`vout`: [V,A]

Instance Parameters

`vlogic_high` = output voltage for high [V]

`vlogic_low` = output voltage for low [V]

`vtrans` = voltages above this at input are considered high [V]

`tdel`, `trise`, `tfall` = {usual} [s]

© 2000-2015 All Rights Reserved.

NAND Gate

Terminals

`vin1`, `vin2`: [V,A]

`vout`: [V,A]

Instance Parameters

`vlogic_high` = output voltage for high [V]

`vlogic_low` = output voltage for high [V]

`vtrans` = voltages above this at input are considered high [V]

`tdel`, `trise`, `tfall` = {usual} [s]

© 2000-2015 All Rights Reserved.

OR Gate

Terminals

`vin1`, `vin2`: [V,A]

`vout`: [V,A]

Instance Parameters

`vlogic_high` = output voltage for high [V]

`vlogic_low` = output voltage for high [V]

`vtrans` = voltages above this at input are considered high [V]

`tdel`, `trise`, `tfall` = {usual} [s]

© 2000-2015 All Rights Reserved.

NOT Gate

Terminals

`vin`: [V,A]

`vout`: [V,A]

Instance Parameters

`vlogic_high` = output voltage for high [V]

`vlogic_low` = output voltage for high [V]

`vtrans` = voltages above this at input are considered high [V]

`tdel`, `trise`, `tfall` = {usual} [s]

© 2000-2015 All Rights Reserved.

NOR Gate

Terminals

`vin1`, `vin2`: [V,A]

`vout`: [V,A]

Instance Parameters

`vlogic_high` = output voltage for high [V]

`vlogic_low` = output voltage for high [V]

`vtrans` = voltages above this at input are considered high [V]

`tdel`, `trise`, `tfall` = {usual} [s]

© 2000-2015 All Rights Reserved.

XOR Gate

Terminals

`vin1`, `vin2`: [V,A]

`vout`: [V,A]

Instance Parameters

`vlogic_high` = output voltage for high [V]

`vlogic_low` = output voltage for high [V]

`vtrans` = voltages above this at input are considered high [V]

`tdel`, `trise`, `tfall` = {usual} [s]

© 2000-2015 All Rights Reserved.

XNOR Gate

Terminals

`vin1`, `vin2`: [V,A]

`vout`: [V,A]

Instance Parameters

`vlogic_high` = output voltage for high [V]

`vlogic_low` = output voltage for high [V]

`vtrans` = voltages above this at input are considered high [V]

`tdel`, `trise`, `tfall` = {usual} [s]

© 2000-2015 All Rights Reserved.

D-Type Flip-Flop

Terminals

`vin_d`: [V,A]

`vclk`: [V,A]

`out_q`, `vout_qbar`: [V,A]

Description

Triggered on the rising edge.

Instance Parameters

`vlogic_high` = output voltage for high [V]

`vlogic_low` = output voltage for low [V]

`vtrans` = voltages above this at input are considered high [V]

`vtrans_clk` = transition voltage of clock [V]

`tdel`, `trise`, `tfall` = {usual} [s]

© 2000-2015 All Rights Reserved.

Clocked JK Flip-Flop

Terminals

`vin_j`: [V,A]

`vin_k`: [V,A]

`vclk`: [V,A]

`vout_q`: [V,A]

`vout_qbar`: [V,A]

Description

Triggered on the rising edge.

Logic Table

J	K	Q	Q'
0	0	0	0
0	0	1	1
0	1	0	0
0	1	1	0
1	0	0	1
1	0	1	1
1	1	0	1
1	1	1	0

Instance Parameters

`vlogic_high` = output voltage for high [V]

`vlogic_low` = output voltage for low [V]

`vtrans` = voltages above this at input are considered high [V]

© 2000-2015 All Rights Reserved.

`tdel`, `trise`, `tfall` = {usual} [s]

© 2000-2015 All Rights Reserved.

JK-Type Flip-Flop

Terminals

`vin_j`, `vin_k`: inputs

`vout_q`, `vout_qbar`: outputs

Description

Triggered on the rising edge.

Logic Table

J	K	Q	Q(t+e)
0	0	0	0
0	0	1	1
0	1	0	0
0	1	1	0
1	0	0	1
1	0	1	1
1	1	0	1
1	1	1	0

Instance Parameters

`vlogic_high` = output voltage for high [V]

`vlogic_low` = output voltage for low [V]

`vtrans` = voltages above this at input are considered high [V]

`tdel`, `trise`, `tfall` = {usual} [s]

© 2000-2015 All Rights Reserved.

Level Shifter

Terminals

`sigin`: (val, flow)

`sigout`: (val, flow)

Description

`sigout` = `sigin` added to `sigshift`.

Instance Parameters

`sigshift` = level shift (val)

© 2000-2015 All Rights Reserved.

RS-Type Flip-Flop

Terminals

`vin_s`: [V,A]

`vin_r`: [V,A]

`vout_q`, `vout_qbar`: [V,A]

Logic Table

S(t)	R(t)	Q(t)	Q(t+e)
0	0	0	0
0	0	1	1
0	1	0	0
0	1	1	0
1	0	0	1
1	0	1	1
1	1	0	X
1	1	1	X

Instance Parameters

`vlogic_high` = output voltage for high [V]

`vlogic_low` = output voltage for low [V]

`vtrans` = voltages above this at input are considered high [V]

`tdel`, `trise`, `tfall` = {usual} [s]

© 2000-2015 All Rights Reserved.

Trigger-Type (Toggle-Type) Flip-Flop

Terminals

`vtrig`: trigger [V,A]

`vout_q`, `vout_qbar`: outputs [V,A]

Description

Triggered on the rising edge.

Logic Table

T	Q	Q(t+e)
0	0	0
0	1	1
1	0	1
1	1	0

Instance Parameters

`initial_state` = the initial state/output of the flip-flop []

`vlogic_high` = output voltage for high [V]

`vlogic_low` = output voltage for low [V]

`vtrans` = voltages above this at input are considered high [V]

`tdel`, `trise`, `tfall` = {usual} [s]

© 2000-2015 All Rights Reserved.

Half Adder

Terminals

`vin1`, `vin2`: bits to be added [V,A]

`vout_sum`: vout_sum out [V,A]

`vout_carry`: carry out [V,A]

Instance Parameters

`vlogic_high` = logic high value [V]

`vlogic_low` = logic low value [V]

`vtrans` = threshold for inputs to be high [V]

`tdel`, `trise`, `tfall` = {usual} [s]

© 2000-2015 All Rights Reserved.

Full Adder

Terminals

`vin1`, `vin2`: bits to be added [V,A]

`vin_carry`: carry in [V,A]

`vout_sum`: sum out [V,A]

`vout_carry`: carry out [V,A]

Instance Parameters

`vlogic_high` = logic high value [V]

`vlogic_low` = logic low value [V]

`vtrans` = threshold for inputs to be high [V]

`tdel`, `trise`, `tfall` = {usual} [s]

© 2000-2015 All Rights Reserved.

Half Subtractor

Terminals

`vin1`, `vin2`: inputs [V,A]

`vout_diff`: difference out [V,A]

`vout_borrow`: borrow out [V,A]

Formula

`vin1` - `vin2` = `vout_diff` and `borrow`

Truth Table

in1	in2	diff	borrow
0	0	0	0
0	1	1	1
1	0	1	0
1	1	0	0

Instance Parameters

`vlogic_high` = logic high value [V]

`vlogic_low` = logic low value [V]

`vtrans` = threshold for inputs to be high [V]

`tdel`, `trise`, `tfall` = {usual} [s]

© 2000-2015 All Rights Reserved.

Full Subtractor

Terminals

`vin1`, `vin2`: inputs [V,A]

`vin_borrow`: borrow in [V,A]

`vout_diff`: difference out [V,A]

`vout_borrow`: borrow out [V,A]

Truth Table

in1	in2	bin	bout	doff
0	0	0	0	0
0	0	1	1	1
0	1	0	1	1
0	1	1	1	0
1	0	0	0	1
1	0	1	0	0
1	1	0	0	0
1	1	1	1	1

Instance Parameters

`vlogic_high` = logic high value [V]

`vlogic_low` = logic low value [V]

`vtrans` = threshold for inputs to be high [V]

`tdel`, `trise`, `tfall` = {usual} [s]

© 2000-2015 All Rights Reserved.

Parallel Register, 8-Bit

Terminals

`vin_d0..vin_d7`: input data lines [V,A]

`vout_d0..vout_d7`: output data lines [V,A]

`venable`: enable line [V,A]

Description

Input occurs on the rising edge of `venable`.

Instance Parameters

`vlogic_high` = output voltage for high [V]

`vlogic_low` = output voltage for low [V]

`vtrans` = voltages above this at input are considered high [V]

`tdel`, `trise`, `tfall` = {usual} [s]

© 2000-2015 All Rights Reserved.

Serial Register, 8-Bit

Terminals

`vin_d`: input data lines [V,A]

`vout_d`: output data lines [V,A]

`vclk`: enable line [V,A]

Description

Input occurs on the rising edge of `vclk`.

Instance Parameters

`vlogic_high` = output voltage for high [V]

`vlogic_low` = output voltage for low [V]

`vtrans` = voltages above this at input are considered high [V]

`tdel`, `trise`, `tfall` = {usual} [s]

© 2000-2015 All Rights Reserved.

Electromagnetic Components

DC Motor

Terminals

`vp`: positive terminal [V,A]

`vn`: negative terminal [V,A]

`pos_shaft`: motor shaft [rad, Nm]

Description

This is a model of a DC motor driving a shaft.

Instance Parameters

`km` = motor constant [Vs/rad]

`kf` = flux constant [Nm/A]

`j` = inertia factor [Nms^2/rad]

`d` = drag (friction) [Nms/rad]

`rm` = motor resistance [Ohms]

`lm` = motor inductance [H]

© 2000-2015 All Rights Reserved.

Electromagnetic Relay

Terminals

`vopen`: normally opened terminal [V,A]

`vcomm`: common terminal [V,A]

`vclosed`: normally closed terminal [V,A]

`vctrl_n`: negative control signal [V,A]

`vctrl_p`: positive control signal [V,A]

Description

This is a model of a voltage-controlled single-pole, double-throw switch. When the voltage differential between `vctrl_p` and `vctrl_n` exceeds `vtrig`, the normally open branch is shorted (closed). Otherwise, the normally open branch stays open. If the open branch is already closed and the voltage differential between `vctrl_p` and `vctrl_n` falls below `vrelease`, the normally open branch is opened.

Instance Parameters

`vtrig` = input value to close relay [V]

`vrelease` = input value to open relay [V]

© 2000-2015 All Rights Reserved.

Three-Phase Motor

Terminals

`vp1`, `vn1`: phase 1 terminals [V,A]

`vp2`, `vn2`: phase 2 terminals [V,A]

`vp3`, `vn3`: phase 3 terminals [V,A]

`pos`: position of shaft [rad, Nm]

`shaft`: speed of shaft [rad/s, Nm]

`com`: rotational reference point [rad/s, Nm]

Instance Parameters

`km` = motor constant [Vs/rad]

`kf` = flux constant [Nm/A]

`j` = inertia factor [Nms^2/rad]

`d` = drag (friction) [Nms/rad]

`rm` = motor resistance [Ohms]

`lm` = motor inductance [H]

© 2000-2015 All Rights Reserved.

Functional Blocks

Amplifier

Terminals

`sigin`: input (val, flow)

`sigout`: output (val, flow)

Instance Parameters

`gain` = gain between input and output []

`sigin_offset` = subtracted from `sigin` before amplification (val)

© 2000-2015 All Rights Reserved.

Comparator

Terminals

`sigin`: (val, flow)

`sigref`: reference to which `sigin` is compared (val, flow)

`sigout`: comparator output (val, flow)

Description

Compares (`sigin`-`sigin_offset`) to `sigref`—the output is related to their difference by a tanh relationship.

If the difference >>> `sigref`, `sigout` is `sigout_high`.

If the difference = `sigref`, `sigout` is (`sigout_high` + `sigout_low`)/2.

If the difference <<< `sigref`, `sigout` is `sigout_low`.

Intermediate points are fitting to a tanh scaled by `comp_slope`.

Instance Parameters

`sigout_high` = maximum output of the comparator (val)

`sigout_low` = minimum output of the comparator (val)

`sigin_offset` = subtracted from `sigin` before comparison to `sigref` (val)

`comp_slope` = determines the sensitivity of the comparator []

© 2000-2015 All Rights Reserved.

Controlled Integrator

Terminals

`sigin`: (val, flow)

`sigout`: (val, flow)

`sigctrl`: (val, flow)

Description

Integration occurs while `sigctrl` is above `sigctrl_trans`.

Instance Parameters

`sigout0` = initial `sigout` value (val)

`gain` = gain []

`sigctrl_trans` = if `sigcntl` is above this, integration occurs (val)

© 2000-2015 All Rights Reserved.

Deadband

Terminals

`sigin`: input (val, flow)

`sigout`: output (val, flow)

Description

Deadband region is when `sigin` is between `sigin_dead_high` and `sigin_dead_low`. `sigout` is zero in the deadband region. Above the deadband, the output is `sigin` - `sigin_dead_high`. Below the deadband, the output is `sigin` - `sigin_dead_low`.

Instance Parameters

`sigin_dead_high` = upper deadband limit (val)

`sigin_dead_low` = lower deadband limit (val)

© 2000-2015 All Rights Reserved.

Deadband Differential Amplifier

Terminals

`sigin_p`, `sigin_n`: differential input terminals (val, flow)

`sigout`: output terminal (val, flow)

Description

Outputs `sigout_leak` when differential input (`sigin_p`-`sigin_n`) is between `sigin_dead_low` and `sigin_dead_high`. When outside the deadband, the output is an amplified version of the differential input plus `sigout_leak`.

Instance Parameters

`sigin_dead_low` = lower range of dead band (val)

`sigin_dead_high` = upper range of dead band (val)

`sigout_leak` = offset signal; only output in deadband (val)

`gain_low` = differential gain in lower region []

`gain_high` = differential gain in upper region []

© 2000-2015 All Rights Reserved.

Differential Amplifier (Opamp)

Terminals

`sigin_p`, `sigin_n`: (val, flow)

`sigout`: (val, flow)

Description

`sig_out` is `gain` times the adjusted input differential signal. The adjusted input differential signal is the differential input minus `sigin_offset`.

Instance Parameters

`gain` = amplifier differential gain (val)

`sigin_offset` = input offset (val)

© 2000-2015 All Rights Reserved.

Differential Signal Driver

Terminals

`sigin_p`, `sigin_n`: differential input signals (val, flow)

`sigout_p`, `sigout_n`: differential output signals (val, flow)

`sigref`: differential outputs are with reference to this node (val, flow)

Description

Amplifies its differential pair of input by an amount `gain`, producing a differential pair of output signals. The output differential signals appear symmetrically about `sigref`.

Instance Parameters

`gain` = diffdriver gain []

© 2000-2015 All Rights Reserved.

Differentiator

Terminals

`sigin`: (val, flow)

`sigout`: (val, flow)

Instance Parameters

`gain` = []

© 2000-2015 All Rights Reserved.

Flow-to-Value Converter

Terminals

`sigin_p`, `sigin_n`: [V,A]

`sigout_p`, `sigout_n`: [V,A]

Description

val(`sigout_p`, `sigout_n`) = flow(`sigin_p`, `sigin_n`)

Instance Parameters

`gain` = flow to val gain

© 2000-2015 All Rights Reserved.

Rectangular Hysteresis

Terminals

`sigin`: (flow, val)

`sigout`: (flow, val)

Instance Parameters

`hyst_state_init` = the initial output []

`sigout_high` = maximum input/output (val)

`sigout_low` = minimum input/output (val)

`sigtrig_low` = the `sigin` value that will cause `sigout` to go low when `sigout` is high (val)

`sigtrig_high` = the `sigin` value that will cause `sigout` to go high when `sigout` is low (val)

`tdel`, `trise`, `tfall` = {usual} [s]

© 2000-2015 All Rights Reserved.

Integrator

Terminals

`sigin`: (val, flow)

`sigout`: (val, flow)

Instance Parameters

`sigout0` = initial `sigout` value (val)

`gain` = []

© 2000-2015 All Rights Reserved.

Level Shifter

Terminals

`sigin`: (val, flow)

`sigout`: (val, flow)

Description

`sigout` = `sigin` added to `sigshift`.

Instance Parameters

`sigshift` = level shift (val)

© 2000-2015 All Rights Reserved.

Limiting Differential Amplifier

Terminals

`sigin_p`, `sigin_n`: (val, flow)

`sigout`: (val, flow)

Description

Has limited output swing. `sigout` is `gain` times the adjusted differential input signal about (`sigout_high` + `sigout_low`)/2. The adjusted differential input signal is the differential input signal minus `sigin_offset`.

Instance Parameters

`sigout_high` = upper amplifier output limit (val)

`sigout_low` = lower amplifier output limit (val)

`gain` = amplifier gain within the limits []

`sigin_offset` = input offset (val)

© 2000-2015 All Rights Reserved.

Logarithmic Amplifier

Terminals

`sigin`: (val, flow)

`sigout`: (val, flow)

Description

`sigout` is `gain` times the natural log of the absolute value of the adjusted input. The adjusted input is `sigin` minus `sigin_offset` unless the absolute value of the this is less than `min_sigin`. In this case, `min_sigin` is used as the adjusted input.

Instance Parameters

`min_sigin` = absolute value of minimum acceptable `sigin` (val)

`gain` = (val)

`sigin_offset` = input offset (val)

© 2000-2015 All Rights Reserved.

Multiplexer

Terminals

`sigin1`, `sigin2`, `sigin3`: signals to be multiplexed (val, flow)

`cntrlp`, `cntrlm`: differential-controlling signal (val, flow)

`sigout`: (val, flow)

Description

If the differential-controlling signal is below `sigth_high`, `sigout` is `sigin1`. If the differential-controlling signal is above `sigth_low`, `sigout` is `sigin3`. In between these two thresholds, `sigout` = `sigin2`.

Instance Parameters

`sigth_high` = high threshold value (val)

`sigth_low` = low threshold value (val)

© 2000-2015 All Rights Reserved.

Quantizer

Terminals

`sigin`: (val, flow)

`sigout`: (val, flow)

Description

This model quantizes input with unity gain.

Instance Parameters

`nlevel` = number of levels to quantize to []

`round` = if `yes`, go to nearest q-level, otherwise go to nearest q-level below []

`sigout_high` = maximum input/output (val)

`sigout_low` = minimum input/output (val)

`tdel`, `trise`, `tfall` = {usual} [s]

© 2000-2015 All Rights Reserved.

Repeater

Terminals

`sigin`: (val, flow)

`sigout`: (val, flow)

Description

From 0 to `period`, `sigout` = `sigin`. After this, `sigout` is a periodic repetition of what `sigin` was between 0 and `period`.

Instance Parameters

`period` = period of repeated waveform (val)

© 2000-2015 All Rights Reserved.

Saturating Integrator

Terminals

`sigin`: (val, flow)

`sigout`: (val, flow)

Description

The output is the limited integral of the input. The limits are `sigout_max`, `sigin_min`. `sigout0` must lie between `sigout_max` and `sigin_min`.

Instance Parameters

`sigout0` = initial `sigout` value (val)

`gain` = []

`sigout_max` = maximum signal out (val)

`sigout_min` = minimum signal out (val)

© 2000-2015 All Rights Reserved.

Swept Sinusoidal Source

Terminals

`sigout_p`, `sigout_n`: output (val, flow)

Description

The instantaneous frequency of the output is `sweep_rate` * `time` plus `start_freq`.

Instance Parameters

`start_freq` = start frequency [Hz]

`sweep_rate` = rate of increase in frequency [Hz/s]

`amp` = amplitude of output sinusoid (val)

`points_per_cycle` = number of points in a cycle of the output []

© 2000-2015 All Rights Reserved.

Three-Phase Source

Terminals

`vouta`: A-phase terminal [V,A]

`voutb`: B-phase terminal [V,A]

`voutc`: C-phase terminal [V,A]

`vout_star`: star terminal [V,A]

Instance Parameters

`amp` = phase-to-phase voltage amplitude [V]

`freq` = output frequency [Hz]

© 2000-2015 All Rights Reserved.

Value-to-Flow Converter

Terminals

`sigin_p`, `sigin_n`: [V,A]

`sigout_p`, `sigout_n`: [V,A]

Description

flow(`sigout_p`, `sigout_n`) = val(`sigin_p`, `sigin_n`)

Instance Parameters

`gain` = value-to-flow gain []

© 2000-2015 All Rights Reserved.

Variable Frequency Sinusoidal Source

Terminals

`sigin`: frequency-controlling signal (val, flow)

`sigout`: (val, flow)

Description

Outputs a variable frequency sinusoidal signal. Its instantaneous frequency is (`center_freq` + `freq_gain` * `sigin`) [Hz]

Instance Parameters

`amp` = amplitude of the output signal (val)

`center_freq` = center frequency of oscillation frequency when `sigin` = 0 [Hz]

`freq_gain` = oscillator conversion gain (Hz/val)

© 2000-2015 All Rights Reserved.

Variable-Gain Differential Amplifier

Terminals

`sigin_p`, `sigin_n`: differential input terminals (val, flow)

`sigctrl_p`, `sigctrl_n`: differential-controlling terminals (val, flow)

`sigout`: (val, flow)

Description

`sigout` is the product of `gain_const`, (`sigctrl_p` - `sigctrl_n`), and the adjusted input differential signal added to (`sigout_high` + `sigout_low`)/2. The adjusted input differential signal is the input differential signal minus `sigin_offset`.

Instance Parameters

`gain_const` = amplifier gain when (`sigctrl_p` - `sigctrl_n`) = 1 unit []

`sigout_high` = upper output limit (val)

`sigout_low` = lower output limit (val)

`sigin_offset` = input offset (val)

© 2000-2015 All Rights Reserved.

Magnetic Components

Magnetic Core

Terminals

`mp`: positive MMF terminal [A, Wb]

`mn`: negative MMF terminal [A, Wb]

Description

This is a Jiles/Atherton magnetic core model.

Instance Parameters

`len` = effective magnetic length of core [m]

`area` = magnetic cross-section area of core [m^2]

`ms` = saturation magnetization

`gamma` = shaping coefficient

`k` = bulk coupling coefficient

`alpha` = interdomain coupling coefficient

`c` = coefficient for reversible magnetization

© 2000-2015 All Rights Reserved.

Magnetic Gap

Terminals

`mp`: positive MMF terminal [A, Wb]

`mn`: negative MMF terminal [A, Wb]

Description

This is a Jiles/Atherton magnetic gap model.

This model is analogous to a linear resistor in an electrical system.

Instance Parameters

`len` = effective magnetic length of gap [m]

`area` = magnetic cross-section area of gap [m^2]

© 2000-2015 All Rights Reserved.

Magnetic Winding

Terminals

`vp`: positive voltage terminal [V,A]

`vn`: negative voltage terminal [V,A]

`mp`: positive MMF terminal [A, Wb]

`mn`: negative MMF terminal [A, Wb]

Description

This is a Jiles/Atherton winding model.

Instance Parameters

`num_turns` = number of turns []

`rturn` = winding resistance per turn [Ohms]

© 2000-2015 All Rights Reserved.

Two-Phase Transformer

Terminals

`vp_1`, `vn_1`: [V,A]

`vp_2`, `vn_2`: [V,A]

Description

This is structural transformer model implemented using Jiles/Atherton core and winding primitives

Instance Parameters

`turns1` = number of turns in the first winding []

`turns1` = number of turns in the second winding []

`rwinding1` = resistance per turn of first winding [Ohms]

`rwinding2` = resistance per turn of second winding [Ohms]

`len` = length of the transformer core [m]

`area` = area of the transformer core [m^2]

`ms` = saturation magnetization

`gamma` = shaping coefficient

`k` = bulk coupling coefficient

`alpha` = interdomain coupling coefficient

`c` = coefficient for reversible magnetization

© 2000-2015 All Rights Reserved.

Mathematical Components

Absolute Value

Terminals

`sigin`: (val, flow)

`sigout`: (val, flow)

Description

`sigout` is the absolute value of `sigin`.

Instance Parameters

None.

© 2000-2015 All Rights Reserved.

Adder

Terminals

`sigin1`, `sigin2`: (val, flow)

`sigout`: (val, flow)

Description

This model adds two node values.

Instance Parameters

`k1` = gain of sigin1 []

`k2` = gain of sigin2 []

© 2000-2015 All Rights Reserved.

Adder, 4 Numbers

Terminals

`sigin1`, `sigin2`, `sigin3`, `sigin4`: (val, flow)

`sigout`: (val, flow)

Description

`sigout` = `gain1*sigin1` + `gain2*sigin2` +`gain3*sigin3` + `gain4*sigin4`

Instance Parameters

`gain1` = gain for `sigin1` []

`gain2` = gain for `sigin2` []

`gain3` = gain for `sigin3` []

`gain4` = gain for `sigin4` []

© 2000-2015 All Rights Reserved.

Cube

Terminals

`sigin`: (val, flow)

`sigout`: (val, flow)

Description

`sigout` is the cube of the `sigin`.

Instance Parameters

None.

© 2000-2015 All Rights Reserved.

Cubic Root

Terminals

`sigin`: (val, flow)

`sigout`: (val, flow)

Description

`sigout` is the cubic root of `sigin`.

Instance Parameters

`epsilon` = small number added to `sigin` to ensure not getting pow(0,0.3333.), because `pow()` is implemented using logs (val)

© 2000-2015 All Rights Reserved.

Divider

Terminals

`signumer`: numerator (val, flow)

`sigdenom`: denominator (val, flow)

`sigout`: (val, flow)

Description

`sigout` is `gain` multiplied by `signumer` divided by `sigdenom` unless the absolute value of `sigdenom` is less than `min_sigdenom`. In that case, `signumer` is divided by `min_sigdenom` instead and multiplied by the sign of the `sigdenom`.

Instance Parameters

`gain` = divider gain []

`min_sigdenom` = minimum denominator (val)

© 2000-2015 All Rights Reserved.

Exponential Function

Terminals

`sigin`: (val, flow)

`sigout`: (val, flow)

Description

`sigout` is an exponential function of `sigin`. However, if `sigin` is greater than `max_sigin`, `sigin` is taken to be `max_sigin`. This is necessary because the exponential function explodes very quickly.

Instance Parameters

`max_sigin` = maximum value of `sigin` accepted (val)

© 2000-2015 All Rights Reserved.

Multiplier

Terminals

`sigin1`, `sigin2`: inputs (val, flow)

`sigout`: terminals (val, flow)

Description

`sigout` = `gain` * `sigin1` * `signin2`

Instance Parameters

`gain` = gain of multiplier []

© 2000-2015 All Rights Reserved.

Natural Log Function

Terminals

`sigin`: (val, flow)

`sigout`: (val, flow)

Description

`sigout` is the natural log of `sigin`, providing `sigin` > `min_sigin`. If `sigin` is between 0 and `min_sigin`, `sigout` is the log of `min_sigin`. If `sigin` is less than 0, an error is reported.

Instance Parameters

`min_sigin` = minimum value of `sigin` (val)

© 2000-2015 All Rights Reserved.

Polynomial

Terminals

`sigin`: (val, flow)

`sigout`: (val, flow)

Description

This is a model of a third-order polynomial function.

$\texttt{sigout} = \texttt{p3} * \texttt{sigin}^3 + \texttt{p2} * \texttt{sigin}^2 + \texttt{p1} * \texttt{sigin} + \texttt{p0}$

Instance Parameters

`p3` = cubic coefficient []

`p2` = square coefficient []

`p1` = linear coefficient []

`p0` = constant coefficient []

© 2000-2015 All Rights Reserved.

Power Function

Terminals

`sigin`: (val, flow)

`sigout`: (val, flow)

Description

`sigout` is `sigin` to the power of exponent.

Instance Parameters

`exponent` = what `sigin` is raised by []

`epsilon` = small number added to `sigin` to ensure not getting pow(0,0.3333.), because `pow()` is implemented using logs (val)

© 2000-2015 All Rights Reserved.

Reciprocal

Terminals

`sigin`: (val, flow)

`sigout`: (val, flow)

Description

`sigout` is `gain/denom`

Instance Parameters

`gain` = gain (val)

`min_sigdenom` = minimum denominator (val)

© 2000-2015 All Rights Reserved.

Signed Number

Terminals

`sigin`: (val, flow)

`sigout`: (val, flow)

Description

This is a model of the sign of the input.

`sigout` is +1 if `sigin` >= 0; otherwise, `sigout` is -1.

Instance Parameters

None.

© 2000-2015 All Rights Reserved.

Square

Terminals

`sigin`: input

`sigout`: output

Description

`sigout` is the square of the `sigin`.

Instance Parameters

None.

© 2000-2015 All Rights Reserved.

Square Root

Terminals

`sigin`: (val, flow)

`sigout`: (val, flow)

Description

`sigout` is the square root of `sigin`.

Instance Parameters

None.

© 2000-2015 All Rights Reserved.

Subtractor

Terminals

`sigin_p`: input subtracted from (val, flow)

`sigin_n`: input that is subtracted (val, flow)

`sigout`: (val, flow)

Instance Parameters

None.

© 2000-2015 All Rights Reserved.

Subtractor, 4 Numbers

Terminals

`sigin1`, `sigin2`, `sigin3`, `sigin4`: (val, flow)

`sigout`: (val, flow)

Description

`sigout` = `gain1*sigin1` - `gain2*sigin2` - `gain3*sigin3` - `gain4*sigin4`

Instance Parameters

`gain1` = gain for `sigin1`

`gain2` = gain for `sigin2`

`gain3` = gain for `sigin3`

`gain4` = gain for `sigin4`

© 2000-2015 All Rights Reserved.

Measure Components

ADC, 8-Bit Differential Nonlinearity Measurement

Terminals

`vd0..vd7`: data lines from ADC [V,A]

`vout`: voltage sent from conversion to ADC [V,A]

`vclk`: clocking signal for the ADC [V,A]

Description

Measures an 8-bit analog-to-digital converter's (ADC's) differential nonlinearity measurement (DNL) using a histogram method. `vout` is sequentially set to 4,096 equally spaced voltages between `vstart` and `vend`. At each different value of `vout`, a clock pulse is generated causing the ADC to convert this `vout` value. The resultant code of each conversion is stored.

When all the conversions have been done, the DNL is calculated from the recorded data.

If `log_to_file` is `yes`, the DNL (differential nonlinearity) is recorded and written to *`filename`*.

Instance Parameters

`vlogic_high` = [V]

`vlogic_low` = [V]

`tsettle` = time to allow for settling after the data lines are changed before `vd0-7` are recorded [s]—also the period of the ADC conversion clock.

`vstart` = voltage at which to start conversion sweep []

`vend` = voltage at which to end conversion sweep []

`log_to_file` = whether to log the results to a file; `yes` or `no` []

`filename` = the name of the file in which the results are logged []

© 2000-2015 All Rights Reserved.

ADC, 8-Bit Integral Nonlinearity Measurement

Terminals

`vd0..vd7`: data lines from ADC [V,A]

`vout`: voltage sent from conversion to ADC [V,A]

`vclk`: clocking signal for the ADC [V,A]

Description

Measures an 8-bit ADC's INL using a histogram method. `vout` is sequentially set to 4,096 equally spaced voltages between `vstart` and `vend`. At each different value of `vout`, a clock pulse is generated causing the ADC to convert this `vout` value. The resultant code of each conversion is stored.

When all the conversions have been done, the INL is calculated from the recorded data.

If `log_to_file` is `yes`, the INL (integral nonlinearity) is recorded and written to *`filename`*.

Instance Parameters

`vlogic_high` = [V]

`vlogic_low` = [V]

`tsettle` = time to allow for settling after the data lines are changed before `vd0-7` are recorded [s]—also the period of the ADC conversion clock.

`vstart` = voltage at which to start conversion sweep []

`vend` = voltage at which to end conversion sweep []

`log_to_file` = whether to log the results to a file; `yes` or `no` []

`filename` = the name of the file in which the results are logged []

© 2000-2015 All Rights Reserved.

Ammeter (Current Meter)

Terminals

`vp`, `vn`: terminals [V,A]

`vout`: measured current converted to a voltage [V,A]

Description

Measures the current between two of its nodes. It has two modes: rms (root-mean-squared) and absolute.

The measurement is passed through a first-order filter with bandwidth `bw` before being written to a file and appearing at `vout`. This is useful when doing rms measurements. If `bw` is set to zero, no filtering is done.

Instance Parameters

`mtype` = type of current measurement; absolute or rms []

`bw` = bw of output filter (a first-order filter) [Hz]

`log_to_file` = whether to log the results to a file; `yes` or `no` []

`filename` = the name of the file in which the results are logged []

© 2000-2015 All Rights Reserved.

DAC, 8-Bit Differential Nonlinearity Measurement

Terminals

`vin`: terminal for monitoring DAC output voltages [V,A]

`vd0..vd7`: data lines for DAC [V,A]

Description

Sweeps through all the 256 codes and records the digital-to-analog converter (DAC) output voltage and writes the maximum DNL found to the output.

If `log_to_file` is `yes`, the DNL (differential nonlinearity) is recorded and written to *`filename`*.

Instance Parameters

`vlogic_high` = [V]

`vlogic_low` = [V]

`tsettle` = time to allow for settling after the data lines are changed before `vin` is recorded [s]

`log_to_file` = whether to log the results to a file; `yes` or `no` []

`filename` = the name of the file in which the results are logged []

© 2000-2015 All Rights Reserved.

DAC, 8-Bit Integral Nonlinearity Measurement

Terminals

`vin`: terminal for monitoring DAC output voltages [V,A]

`vd0..vd7`: data lines for DAC [V,A]

Description

Sweeps through all the 256 codes and records the DAC output voltage and writes the maximum INL found to the output.

If `log_to_file` is `yes`, the INL (integral nonlinearity) is recorded and written to *`filename`*.

Instance Parameters

`vlogic_high` = [V]

`vlogic_low` = [V]

`tsettle` = time to allow for settling after the data lines are changed before `vin` is recorded [s]

`log_to_file` = whether to log the results to a file; `yes` or `no` []

`filename` = the name of the file in which the results are logged []

© 2000-2015 All Rights Reserved.

Delta Probe

Terminals

`start_pos`, `start_neg`: signal that controls start of measurement []

`stop_pos`, `stop_neg`: signal that controls end of measurement []

Description

This probe measures argument delta between the occurrence of the starting and stopping events. It can also be used to find when the start and stop signals cross the specified reference values (by default `start_count` and `stop_count` are set to 1).

Instance Parameters

`start_td`, `stop_td` = signal delays [s]

`start_val`, `stop_val` = signal value that starts/end measurement []

`start_count`, `stop_count` = number of signal values that starts/end measurement

`start_mode` = one of the starting/stopping modes []

- `arg`–argument value (simulation time)
- `rise`–crossing of the signal value on rise
- `fall`–crossing of the signal value on fall
- `crossing`–any crossing of the signal value

`stop_mode` = one of the starting/stopping modes []

- `arg`–argument value (simulation time)
- `rise`–crossing of the signal value on rise
- `fall`–crossing of the signal value on fall
- `crossing`–any crossing of the signal value

© 2000-2015 All Rights Reserved.

Find Event Probe

Terminals

`out_pos`, `out_neg`: signal to measure []

`start_pos`, `start_neg`: signal that controls start of measurement []

`ref_pos`, `ref_neg`: differential reference signal

Description

This model is of a signal statistics probe. This probe measures the output signal at the occurrence of the event:

- If `arg_val` is given, measure at this value.
- If `start_ref_val` is given, measure the output signal when the start signal crosses this value.
- If `start_ref_val` is not given, measure the output signal when it is equal to the reference signal.

Instance Parameters

`start` = argument value that starts measurements

`stop` = argument value that stops measurements

`start_td` = signal delays [s]

`start_val` = signal value that starts/ends measurement []

`start_count` = number of signal values that starts/ends measurement

`start_mode` = one of the starting/stopping modes []

`arg`–argument value (simulation time)

`rise`–crossing of the signal value on rise

`fall`–crossing of the signal value on fall

`crossing`–any crossing of the signal value

© 2000-2015 All Rights Reserved.

`start_ref_val` = start signal reference value []

`arg_val` = argument value that controls when to measure signals []

1. If `arg_val` is given, measure at the specified value of the simulation argument. If it is not given, measure at the occurrence of the event.
2. If `start_ref_val` is given, measure the output signal when the start signal is equal to the reference value.
3. If `start_ref_val` is not given, measure the output signal when the start signal is equal to the reference signal.

© 2000-2015 All Rights Reserved.

Find Slope

Terminals

`out_pos`, `out_neg`: signal to measure []

Description

This model is of a signal statistics probe.

This probe measures slope of a signal between `arg_val1` and `arg_val2`; if `arg_val2` is not specified, it is set to the value exceeding `arg_val1` by 0.1%.

Instance Parameters

`arg_val1` = first argument value []

`arg_val2` = (optional) second argument value []

© 2000-2015 All Rights Reserved.

Frequency Meter

Terminals

`vp`, `vn`: terminals [V,A]

`fout`: measured frequency [F,A]

Description

Measures the frequency of the voltage across the terminals by detecting the times at which the last two zero crossings occurred. This method only works on pure AC waveforms.

Instance Parameters

`log_to_file` = whether to log the results to a file; `yes` or `no` []

`filename` = the name of the file in which the results are logged []

© 2000-2015 All Rights Reserved.

Offset Measurement

Terminals

`vamp_out`: output voltage of opamp being measured [V,A]

`vamp_p`: positive terminal of opamp being measured [V,A]

`vamp_n`: negative terminal of opamp being measured [V,A]

`vamp_spply_p`: positive supply of opamp being measured [V,A]

`vamp_spply_n`: negative supply of opamp being measured [V,A]

Description

This is a model of a slew rate measurer.

The opamp terminals of the opamp under test are connected to this model. It shorts `vamp_out` to `vamp_n` and grounds `vamp_vp`. After `tsettle` seconds, the voltage read at `vamp_out` is taken to be `offset`.

The result is printed to the screen.

Instance Parameters

`vspply_p` = positive supply voltage required by opamp [V]

`vspply_n` = negative supply voltage required by opamp [V]

`tsettle` = time to let opamp settle before measuring the offset [s]

© 2000-2015 All Rights Reserved.

Power Meter

Terminals

`iin`: input for current passing through the meter [V,A]

`vp_iout`: positive voltage sending terminal and output for current passing through the meter [V,A]

`vn`: negative voltage sensing terminal [V,A]

`pout`: measured impedance converted to a voltage [V]

`va_out`: measured apparent power [W]

`pf_out`: measured power factor []

Description

To measure the power being dissipated in a 2-port device, this meter should be placed in the netlist so that the current flowing into the device passes between `iin` and `vp_iout` first, that `vp_iout` is connected to the positive terminal of the device, and that `vn` is connected to the negative terminal of the device.

The measured power is the average over time of the product of the voltage across and the current through the device. This average is calculated by integrating the VI product and dividing by time and passing the result through a first-order filter with bandwidth `bw`.

The apparent power is calculated by finding the rms values of the current and voltage first and filtering them with a first-order filter of bandwidth `bw`. The apparent power is the product of the voltage and current rms values.

The purpose of the filtering is to remove ripple. Cadence recommends that `bw` be set to a low value to produce accurate measurements and that at least 10 input AC cycles be allowed before the power meter is considered settled. Also allow time for the filters to settle.

This meter requires accurate integration, so it is desirable that the integration method is set to `gear2only` in the netlist.

Instance Parameters

`tstart` = time to wait before starting measurement [s]

© 2000-2015 All Rights Reserved.

`bw` = bw of rms filters (a first-order filter) [Hz]

`log_to_file` = whether to log the results to a file; `yes` or `no` []

`filename` = the name of the file in which the results are logged []

© 2000-2015 All Rights Reserved.

Q (Charge) Meter

Terminals

`vp`, `vn`: terminals [V,A]

`qout`: measured charge [C,A]

Description

Measures the charge that has flown between `vn` and `vp` between `tstart` and `tend`.

Instance Parameters

`tstart` = start time [s]

`tend` = end time [s]

`log_to_file` = whether to log the results to a file; `yes` or `no` []

`filename` = the name of the file in which the results are logged []

© 2000-2015 All Rights Reserved.

Sampler

Terminal

`sigin`: (val, flow)

Description

Samples `sigin` every `tsample` and writes the results to `filename` and labels the data with `label`. The time variable is recorded if `log_time` is `yes`.

Instance Parameters

`tsample` = how often input is sampled [s]

`filename` = name of file where samples are stored []

`label` = label for signal being sampled []

`log_time` = if the time variable should be logged to a file []

© 2000-2015 All Rights Reserved.

Slew Rate Measurement

Terminals

`vamp_out`: output voltage of the opamp being measured [V,A]

`vamp_p`: positive terminal of the opamp being measured [V,A]

`vamp_n`: negative terminal of the opamp being measured [V,A]

`vamp_spply_p`: positive supply of the opamp being measured [V,A]

`vamp_spply_n`: negative supply of the opamp being measured [V,A]

Description

Monitors the input and records the times at which it equals `vstart` and `vend`. The slew is given to be `vstart` - `vend` divided by the time difference.

The result is printed to the screen.

Instance Parameters

`vspply_p` = positive supply voltage required by opamp [V]

`vspply_n` = negative supply voltage required by opamp [V]

`twait` = time to wait before applying pulse to opamp input [V]

`vstart` = voltage at which to record the first measurement point [V]

`vend` = voltage at which to record the other measurement point [V]

`tmin` = minimum time allowed between both measurements before an error is reported [s]

© 2000-2015 All Rights Reserved.

Signal Statistics Probe

Terminals

`out_pos`, `out_neg`: signal to measure []

`start_pos`, `start_neg`: signal that controls start of measurement []

`stop_pos`, `stop_neg`: signal that controls end of measurement []

Description

This probe measures signals such as minimum, maximum, average, peak-to-peak, root mean square, standard deviation of the output, and start signals within a measuring window. It also gives a correlation coefficient between output and start signals.

Instance Parameters

`start_arg` = argument value that starts measurements

`stop_arg` = argument value that stops measurements

`start_td`, `stop_td` = signal delays [s]

`start_val`, `stop_val` = signal value that starts/end measurement []

`start_count`, `stop_count` = number of signal values that starts/end measurement

`start_mode` = one of starting/stopping modes []

- `arg`–argument value (simulation time)
- `rise`–crossing of the signal value on rise
- `fall`–crossing of the signal value on fall
- `crossing`–any crossing of the signal value

`stop_mode` = one of starting/stopping modes []

- `arg`–argument value (simulation time)
- `rise`–crossing of the signal value on rise

© 2000-2015 All Rights Reserved.

`fall`–crossing of the signal value on fall

`crossing`–any crossing of the signal value

© 2000-2015 All Rights Reserved.

Voltage Meter

Terminals

`vp`, `vn`: terminals [V,A]

`vout`: measured voltage [V,A]

Description

Measures the voltage between two of its nodes. It has two modes: rms (root-mean-squared) and absolute.

The measurement is passed through a first-order filter with bandwidth `bw` before being written to a file and appearing at `vout`. This is useful when doing rms measurements. If `bw` is set to zero, no filtering is done.

Instance Parameters

`mtype` = type of voltage measurement; absolute or rms []

`bw` = bw of output filter (a first-order filter) [Hz]

`log_to_file` = whether to log the results to a file; `yes` or `no` []

`filename` = the name of the file in which the results are logged []

© 2000-2015 All Rights Reserved.

Z (Impedance) Meter

Terminals

`iin`: input for current passing through the meter [V,A]

`vp_iout`: positive voltage-sensing terminal and output for current passing through the meter [V,A]

`vn`: negative voltage sensing terminal [V,A]

`zout`: measured impedance converted to a voltage [Ohms]

Description

To measure the impedance across a 2-port device, this meter should be placed in the netlist so that the current flowing into the device passes between `iin` and `vp_iout` first, that `vp_iout` is connected to the positive terminal of the device, and that `vn` is connected to the negative terminal of the device.

The impedance is calculated by finding the rms values of the current and voltage first and filtering them with a first-order filter of bandwidth `bw`. The impedance is the ratio of these filtered Irms and Vrms values. The purpose of the filtering is to remove ripple.

Cadence recommends that `bw` be set to a low value to produce accurate measurements and that at least 10 input AC cycles be allowed before the zmeter is considered settled. Also allow time for the filters to settle.

The time step size should also be kept small to increase accuracy.

This meter is nonintrusive—that is, it does not drive current in the device being measured. However to work it requires that something else drives current through the device.

Instance Parameters

`bw` = bw of rms filters (a first-order filter) [Hz]

`log_to_file` = whether to log the results to a file; `yes` or `no` []

`filename` = the name of the file in which the results are logged []

© 2000-2015 All Rights Reserved.

Mechanical Systems

Gearbox

Terminals

`wshaft1`: shaft of the first gear [rad/s, Nm]

`wshaft2`: shaft of the second gear [rad/s, Nm]

Description

This is a model of two intermeshed gears.

Instance Parameters

`radius1` = radius of first gear [m]

`radius2` = radius of second gear [m]

`inertia1` = inertia of first gear [Nms/rad]

`inertia2` = inertia of second gear [Nms/rad]

© 2000-2015 All Rights Reserved.

Mechanical Damper

Terminals

`posp`, `posn`: terminals [m, N]

Instance Parameters

`d` = friction coefficient [N/m]

© 2000-2015 All Rights Reserved.

Mechanical Mass

Terminal

`posin`: terminal [m, N]

Instance Parameters

`m` = mass [kg]

`gravity` = whether gravity acting on the direction of movement of mass []

© 2000-2015 All Rights Reserved.

Mechanical Restrainer

Terminals

`posp`, `posn`: terminals [m, N]

Description

Limits extension of the nodes to which it is attached.

Instance Parameters

`minl` = minimum extension [m]

`maxl` = maximum extension [m]

© 2000-2015 All Rights Reserved.

Road

Terminal

`posin`: terminal [m, N]

Description

This is a model of a road with bumps.

Instance Parameters

`height` = height of bumps [m]

`length` = length of bumps [m]

`speed` = speed [m/s]

`distance` = distance to first bump [m]

© 2000-2015 All Rights Reserved.

Mechanical Spring

Terminals

`posp`, `posn`: terminals [m, N]

Instance Parameters

`k` = spring constant [N/m]

`l` = length of the spring [m]

© 2000-2015 All Rights Reserved.

Wheel

Terminals

`posp`, `posn`: terminals [m, N]

Description

This is a model of a bearing wheel on a fixed surface.

Instance Parameters

`height` = height of the wheel [m]

© 2000-2015 All Rights Reserved.

Mixed-Signal Components

Analog-to-Digital Converter, 8-Bit

Terminals

`vin`: [V,A]

`vclk`: [V,A]

`vd0..vd7`: data output terminals [V,A]

Description

This ADC comprises 8 comparators. An input voltage is compared to half the reference voltage. If the input exceeds it, bit 7 is set and half the reference voltage is subtracted. If not, bit 7 is assigned zero and no voltage is subtracted from the input. Bit 6 is found by doing an equivalent operation comparing double the adjusted input voltage coming from the first comparator with half the reference voltage. Similarly, all the other bits are found.

Mismatch effects in the comparator reference voltages can be modeled setting `mismatch` to a nonzero value. The maximum `mismatch` on a comparator's reference voltage is +/- `mismatch` percent of that voltage's nominal value.

Instance Parameters

`mismatch_fact` = maximum mismatch as a percentage of the average value []

`vlogic_high` = [V]

`vlogic_low` = [V]

`vtrans_clk` = clk high-to-low transition voltage [V]

`vref` = voltage that voltage is done with respect to [V]

`tdel`, `trise`, `tfall` = {usual} [s]

© 2000-2015 All Rights Reserved.

Analog-to-Digital Converter, 8-Bit (Ideal)

Terminals

`vin`: [V,A]

`vclk`: [V,A]

`vd0..vd7`: data output terminals [V,A]

Description

This model is ideal because no mismatch is modeled.

Instance Parameters

`tdel`, `trise`, `tfall` = {usual} [s]

`vlogic_high` = [V]

`vlogic_low` = [V]

`vtrans_clk` = clk high-to-low transition voltage [V]

`vref` = voltage that voltage is done with respect to [V]

© 2000-2015 All Rights Reserved.

Decimator

Terminals

`vin`: [V,A]

`vout`: [V,A]

`vclk`: [V,A]

Description

Produces a cumulative average of `N` samples of `vin`. `vin` is sampled on the positive `vclk` transition. The cumulative average of the previous set of `N` samples is output until a new set of `N` samples has been captured.

Transfer Function: 1/`N` * (1 - Z^-`N`)/(1-Z^-1)

Instance Parameters

`N` = oversampling ratio [V]

`vtrans_clk` = transition voltage of the clock [V]

`tdel`, `trise`, `tfall` = {usual} [s]

© 2000-2015 All Rights Reserved.

Digital-to-Analog Converter, 8-Bit

Terminals

`vd0..vd7`: data inputs [V,A]

`vout`: [V,A]

Description

Mismatch effects can be modeled in this DAC by setting `mismatch` to a nonzero value. The maximum mismatch on a bit is +/-`mismatch` percent of that bit's nominal value.

Instance Parameters

`vref` = reference voltage for the conversion [V]

`mismatch_fact` = maximum mismatch as a percentage of the average value []

`vtrans` = logic high-to-low transition voltage [V]

`tdel`, `trise`, `tfall` = {usual} [s]

© 2000-2015 All Rights Reserved.

Digital-to-Analog Converter, 8-Bit (Ideal)

Terminals

`vd0..vd7`: data inputs [V,A]

`vout`: [V,A]

Instance Parameters

`vref` = reference voltage that conversion is with respect to [V]

`vtrans` = transition voltage between logic high and low [V]

`tdel`, `trise`, `tfall` = {usual} [s]

© 2000-2015 All Rights Reserved.

Sigma-Delta Converter (first-order)

Terminals

`vin`: [V,A]

`vclk`: [V,A]

`vout`: [V,A]

Description

This is a model of a first-order sigma-delta analog-to-digital converter.

Instance Parameters

`vth` = threshold voltage of two-level quantizer [V]

`vout_high` = range of sigma-delta is 0-`vout_high` [V]

`vtrans_clk` = transition of voltage of clock [V]

`tdel`, `trise`, `tfall` = {usual}

© 2000-2015 All Rights Reserved.

Sample-and-Hold Amplifier (Ideal)

Terminals

`vin`: [V,A]

`vclk`: [V,A]

`vout`: [V,A]

Instance Parameters

`vtrans_clk` = transition voltage of the clock [V]

© 2000-2015 All Rights Reserved.

Single Shot

Terminals

`vin`: input terminal [V,A]

`vout`: output terminal [V,A]

Description

This model outputs a logic high pulse of duration `pulse_width` if a positive transition is detected on the input.

Instance Parameters

`pulse_width` = pulse width [s]

`vlogic_high` = output voltage for high [V]

`vlogic_low` = output voltage for low [V]

`vtrans` = voltages above this at input are considered high [V]

`tdel`, `trise`, `tfall` = {usual} [s]

© 2000-2015 All Rights Reserved.

Switched Capacitor Integrator

Terminals

`vout_p`, `vout_n`: output terminals [V,A]

`vin_p`, `vin_n`: input terminals [V,A]

`vphi`: switching signal [V,A]

Instance Parameters

`cap_in` = input capacitor value

`cap_fb` = feedback capacitor value

`vphi_trans` = transition voltage of `vphi`

© 2000-2015 All Rights Reserved.

Power Electronics Components

Full Wave Rectifier, Two Phase

Terminals

`vin_top`: input [V,A]

`tfire`: delay after positive zero crossing of each phase before phase rectifier fires [s,A]

`vout`: rectified output voltage [V,A]

Instance Parameters

`ihold` = holding current (minimum current for rectifier to work) [A]

`switch_time` = maximum amount of time to spend attempting switch-on [s]

`vdrop_rect` = total rectification voltage drop [V]

© 2000-2015 All Rights Reserved.

Half Wave Rectifier, Two Phase

Terminals

`vin_top`: input [V,A]

`tfire`: delay after positive zero crossing of each phase before phase rectifier fires [s,A]

`vout`: rectified output voltage [V,A]

Instance Parameters

`ihold` = holding current (minimum current for rectifier to work) [A]

`switch_time` = maximum amount of time to spend attempting switch-on [s]

`vdrop_rect` = total rectification voltage drop [V]

© 2000-2015 All Rights Reserved.

Thyristor

Terminals

`vanode`: anode [V,A]

`vcathode`: cathode [V,A]

`vgate`: gate [V,A]

Instance Parameters

`iturn_on` = thyristor gate triggering current [A]

`ihold` = thyristor hold current [A]

`von` = thyristor on voltage [V]

© 2000-2015 All Rights Reserved.

Semiconductor Components

Diode

Terminals

`vanode`: anode voltage [V,A]

`vcathode`: cathode voltage [V,A]

Description

This model is of a diode based on the Schockley equation.

Instance Parameters

`is` = saturation current with negative bias [A]

© 2000-2015 All Rights Reserved.

MOS Transistor (Level 1)

Terminals

`vdrain`: drain [V,A]

`vgate`: gate [V,A]

`vsource`: source [V,A]

`vbody`: body [V,A]

Description

This model is of a basic, level-1, Schichmann-Hodges style model of a MOSFET transistor.

Instance Parameters

`width` = [m]

`length` = [m]

`vto` = threshold voltage [V]

`gamma` = bulk threshold []

`phi` = bulk junction potential [V]

`lambda` = channel length modulation []

`tox` = oxide thickness []

`u0` = transconductance factor []

`xj` = metallurgical junction depth []

`is` = saturation current []

`cj` = bulk junction capacitance [F]

`vj` = bulk junction voltage [V]

`mj` = bulk grading coefficient []

© 2000-2015 All Rights Reserved.

`fc` = forward bias capacitance factor []

`tau` = parasitic diode factor []

`cgbo` = gate-bulk overlap capacitance [F]

`cgso` = gate-source overlap capacitance [F]

`cgdo` = gate-drain overlap capacitance [F]

`dev_type` = the type of MOSFET used []

© 2000-2015 All Rights Reserved.

MOS Thin-Film Transistor

Terminals

`vdrain`: drain terminal [V,A]

`vgate_front`: front gate terminal [V,A]

`vsource`: source terminal [V,A]

`vgate_back`: back gate terminal [V,A]

Description

This model is of a silicon-on-insulator thin-film transistor.

This is a model of a fully depleted back surface thin-film transistor MOSFET model. No short-channel effects.

Instance Parameters

`length` = length []

`width` = width []

`toxf` = oxide thickness [m]

`toxb` = oxide thickness [m]

`nsub` = [cm^{-3}]

`ngate` = [cm^{-3}]

`nbody` = [cm^{-3}]

`tb` = [m]

`u0` = []

`lambda` = channel length modulation factor []

`dev_type` = dev_type []

© 2000-2015 All Rights Reserved.

N JFET Transistor

Terminals

`vdrain`: drain voltage [V,A]

`vgate`: gate voltage [V,A]

`vsource`: source voltage [V,A]

Description

This is a model of an n-channel, junction field-effect transistor.

Instance Parameters

`area` = area []

`vto` = threshold voltage [V]

`beta` = gain []

`lambda` = output conductance factor []

`is` = saturation current []

`gmin` = minimal conductance []

`cjs` = gate-source junction capacitance [F]

`cgd` = gate-drain junction capacitance [F]

`m` = emission coefficient []

`phi` = gate junction barrier potential []

`fc` = forward bias capacitance factor []

© 2000-2015 All Rights Reserved.

NPN Bipolar Junction Transistor

Terminals

`vcoll`: collector [V,A]

`vbase`: base [V,A]

`vemit`: emitter [V,A]

`vsubs`: substrate [V,A]

Description

This is a gummel-poon style npn bjt model.

Instance Parameters

`area` = cross-section area

`is` = saturation current []

`ise` = base-emitter leakage current []

`isc` = base-collector leakage current []

`bf` = beta forward []

`br` = beta reverse []

`nf` = forward emission coefficient []

`nr` = reverse emission coefficient []

`ne` = b-e leakage emission coefficient []

`nc` = b-c leakage emission coefficient []

`vaf` = forward Early voltage [V]

`var` = reverse Early voltage [V]

`ikf` = forward knee current [A]

© 2000-2015 All Rights Reserved.

`ikr` = reverse knee current [A]

`cje` = capacitance, base-emitter junction [F]

`vje` = voltage, base-emitter junction [V]

`mje` = b-e grading exponential factor []

`cjc` = capacitance, base-collector junction [F]

`vjc` = voltage, base-collector junction [V]

`mjc` = b-c grading exponential factor []

`cjs` = capacitance, collector-substrate junction [F]

`vjs` = voltage, collector-substrate junction [V]

`mjs` = c-s grading exponential factor []

`fc` = forward bias capacitance factor []

`tf` = ideal forward transit time [s]

`xtf` = `tf` bias coefficient []

`vtf` = `tf`-vbc dependence voltage [V]

`itf` = high current factor []

`tr` = reverse diffusion capacitance [s]

© 2000-2015 All Rights Reserved.

Schottky Diode

Terminals

`vanode`: anode voltage [V,A]

`vcathode`: cathode voltage [V,A]

Description

This model is of a diode based on the Schockley equation.

Instance Parameters

`area` = area of junction []

`is` = saturation current []

`n` = emission coefficient []

`cjo` = zero-bias junction capacitance [F]

`m` = grading coefficient []

`phi` = body potential [V]

`fc` = forward bias capacitance [F]

`tt` = transit time [s]

`bv` = reverse breakdown voltage [V]

`rs` = series resistance [Ohms]

`gmin` = minimal conductance [Mhos]

© 2000-2015 All Rights Reserved.

Telecommunications Components

AM Demodulator

Terminals

`vin`: AM RF input signal [V,A]

`vout`: demodulated signal [V,A]

Description

Demodulates the signal in `vin` and outputs it as `vout`.

Consists of four stages in series:

1. RF amp amplifier
2. Detector stage (full wave rectifier)
3. AF filters stage is a low-pass filter that extracts the AF signal—has gain of one, and two poles at `af_wn` [rad/s]
4. AF amp stage amplifies by `af_gain` and adds `af_lev_shift`

Instance Parameters

`rf_gain` = gain of RF (radio frequency) stage []

`af_wn` = location of both AF (audio frequency) filter poles [rad/s]

`af_gain` = gain of the audio amplifier []

`af_lev_shift` = added to AF signal after amplification and filtering [V]

© 2000-2015 All Rights Reserved.

AM Modulator

Terminals

`vin`: input signal [V,A]

`vout`: modulated signal [V,A]

Description

`vin` is limited to the range between `vin_max` and `vin_min`. It is also scaled so that it lies within the +/-1 range. This produces `vin_adjusted`. `vout` is given by the following formula:

`vout` = `unmod_amp` * (1 + `mod_depth` * `vin_adjusted`) * cos (2 * PI * `f_carrier` * `time`)

Instance Parameters

`f_carrier` = carrier frequency [Hz]

`vin_max` = maximum input signal [V]

`vin_min` = minimum input signal [V]

`mod_depth` = modulation depth []

`unmod_amp` = unmodulation carrier amplitude [V]

© 2000-2015 All Rights Reserved.

Attenuator

Terminals

`vin`: AM input signal [V,A]

`vout`: rectified AM signal [V,A]

Description

`vout` is attenuated by `attenuation`.

Instance Parameters

`attenuation` = 20log10 attenuation [dB]

© 2000-2015 All Rights Reserved.

Audio Source

Terminals

`vin`: [V,A]

`vout`: [V,A]

Description

This model synthesizes an audio source. Its output is the sum of 4 sinusoidal sources.

Instance Parameters

`amp1` = amplitude of the first sinusoid [V]

`amp2` = amplitude of the second sinusoid [V]

`amp3` = amplitude of the third sinusoid [V]

`amp4` = amplitude of the fourth sinusoid [V]

`freq1` = frequency of the first sinusoid [Hz]

`freq2` = frequency of the second sinusoid [Hz]

`freq3` = frequency of the third sinusoid [Hz]

`freq4` = frequency of the fourth sinusoid [Hz]

© 2000-2015 All Rights Reserved.

Bit Error Rate Calculator

Terminals

`vin1`: [V,A]

`vin2`: [V,A]

Description

This model compares the two input signals `tstart`+`tperiod`/2 and every `tperiod` seconds later. At the end of the simulation, it prints the bit error rate, which is the number of errors found divided by the number of bits compared.

Instance Parameters

`tstart` = when to start measuring [s]

`tperiod` = how often to compare bits [s]

`vtrans` = voltages above this at input are considered high [V]

© 2000-2015 All Rights Reserved.

Charge Pump

Terminals

`vout`: output terminal from which charge pumped/sucked [V,A]

`vsrc`: source terminal from which charge sourced/sunk [V,A]

`siginc`, `sigdec`: Logic signal that controls charge pump operation [V,A]

Description

This model can source of sink a fixed current, `iamp`. Its mode depends on the values of `siginc` and `sigdec`;

When `siginc` > `vtrans`, `iamp` amps are pumped from the output. When `sigdec` > `vtrans`, `iamp` amps are sucked into the output. When both `siginc` and `sigdec` are in the same state, no current is sucked/pumped.

Instance Parameters

`iamp` = charging current magnitude [A]

`vtrans` = voltages above this at input are considered high [V]

`tdel`, `trise`, `tfall` = {usual} [s]

© 2000-2015 All Rights Reserved.

Code Generator, 2-Bit

Terminals

`vout0`, `vout1`: output bits [V,A]

Description

Generates a pair of random binary signals.

Instance Parameters

`seed` = random seed

`tperiod` = period of output code [s]

`vlogic_high` = output voltage for high [V]

`vlogic_low` = output voltage for low [V]

`tdel`, `trise`, `tfall` = {usual} [s]

© 2000-2015 All Rights Reserved.

Code Generator, 4-Bit

Terminals

`vout_b0-3`: output bits [V,A]

Description

This model is of a random 4-bit code generator.

This model outputs a different, randomly generated, 4-bit code every `tperiod` seconds.

Instance Parameters

`tperiod` = period of the code generation [s]

`vlogic_high` = output voltage for high [V]

`vlogic_low` = output voltage for low [V]

`tdel`, `trise`, `tfall` = {usual} [s]

© 2000-2015 All Rights Reserved.

Decider

Terminals

`vin`: [V,A]

`vout`: [V,A]

Description

This model samples this input signal a number of times and outputs the most likely value of the binary data contained in the signal.

A decision on what data is contained in the input is made each `tperiod`. During each decision period, a sample of the input is taken each `tsample`. A count of the number of samples with values greater than (`vlogic_high` + `vlogic_low`)/2 is kept. If at the end of the period, this count is greater than half the number of samples taken, a logic `1` is output. If it is less than half the number of samples, `vlogic_low` is output. Otherwise, the output is (`vlogic_high` + `vlogic_low`)/2.

The sampling starts at `tstart`.

Instance Parameters

`tperiod` = period of binary data being extracted [s]

`tsample` = sampling period [s]

`vlogic_high` = output voltage for high [V]

`vlogic_low` = output voltage for low [V]

`tstart` = time at which to start sampling [s]

`tdel`, `trise`, `tfall` = {usual} [s]

© 2000-2015 All Rights Reserved.

Digital Phase Locked Loop (PLL)

Terminals

`vin`: [V,A]

`vout`: [V,A]

Description

The model comprises a number of submodels: digital phase detector, a change pump, a low-pass filter (LPF), and a digital voltage-controlled oscillator (VCO).

They are arranged in the following way:

```
          __________        _______   Iq     Vin_VCO  _______
         |          |      |       |---->--|----------|       |
Vin------|   Phase  |------| Charge |       V          |  VCO  |
         |          |      |       |   ___|___        |       |
     ----|  Detector |------|  Pump  |  |       |      |_______|
     |   |__________|      |_______|  |  RC   |          |
     |                          |     |Network|          |
     |                          |     | (LPF) |          |---Vout
     | V_local_osc              |     |_______|          |
     |                          |         |              |
     |                          |-----------             |
     |                          |                        |
     |                          |                        |
     |                     gnd ///                       |
     |                                                   |
     |---------------------------------------------------|
```

Instance Parameters

`pump_iamp` = amplitude of the charge pump's output current [A]

`vco_cen_freq` = center frequency of the VCO [Hz]

`vco_gain` = the gain of the VCO []

`lpf_zero_freq` = zero frequency of LPF (low-pass filter) [Hz]

`lpf_pole_freq` = pole frequency of LPF [Hz]

`lpf_r_nom` = nominal resistance of RC network implementing LPF

© 2000-2015 All Rights Reserved.

Digital Voltage-Controlled Oscillator

Terminals

`vin`: [V,A]

`vout`: [V,A]

Description

The output is a square wave with instantaneous frequency:

`center_freq` + `vco_gain` * `vin`

Instance Parameters

`center_freq` = center frequency of oscillation frequency when `vin` = 0 [Hz]

`vco_gain` = oscillator conversion gain [Hz/volt]

`vlogic_high` = output voltage for high [V]

`vlogic_low` = output voltage for low [V]

`tdel`, `trise`, `tfall` = {usual} [s]

© 2000-2015 All Rights Reserved.

FM Demodulator

Terminals

`vin`: FM RF input signal [V,A]

`vout`: demodulated signal [V,A]

Description

Demodulates the signal in `vin` and outputs it as `vout`.

Consists of four stages in series:

1. RF amp stage amplifiers `vin`
2. Detector stage is a phase locked loop (PLL)
3. AF filters stage is a low-pass filter that extracts the AF signal. The filter has gain of one, and two poles at `af_wn` [rad/s]
4. AF amp stage amplifies by `af_gain` and adds `af_lev_shift`.

Instance Parameters

`rf_gain` = gain of RF (radio frequency) stage []

`pll_out_bw` = bandwidth of PLL output filter [Hz]

`pll_vco_gain` = gain of the PLL's VCO []

`pll_vco_cf` = the center frequency of the PLLs [Hz]

`af_wn` = location of both AF (audio frequency) filter poles [Hz]

`af_gain` = gain of the audio amplifier []

`af_lev_shift` = added to AF signal after amplification and filtering [V]

© 2000-2015 All Rights Reserved.

FM Modulator

Terminals

`vin`: input signal [V,A]

`vout`: modulated signal [V,A]

Description

`vout` = `amp` * sin (`phase`)

where `phase` = `integ` (2 * PI * `f_carrier` + `vin_gain` * `vin`)

Instance Parameters

`f_carrier` = carrier frequency [Hz]

`amp` = amplitude of the FM modulator output []

`vin_gain` = amplification of vin_signal before it is used to modulate the FM carrier signal []

© 2000-2015 All Rights Reserved.

Frequency-Phase Detector

Terminals

`vin_if`: signal whose phase is being detected [V,A]

`vin_lo`: signal from local oscillator [V,A]

`sigout_inc`: logic signal to control charge pump [V,A]

`sigout_dec`: logic signal to control charge pump [V,A]

Description

The `freq_ph_detector` can have three states: `behind`, `ahead`, and `same`. The specific state is determined by the positive-going transitions of the signals `vin_if` and `vin_lo`.

Positive transitions on `vin_if` causes the state to become the next higher state unless the state is already `ahead`.

Positive transitions on `vin_lo` cause the state to become the next lower state unless the state is already `behind`.

The output depends on the state the detector is in:

`ahead` => `sigout_inc` = high, `sigout_dec` = low

`same` => `sigout_inc` = high, `sigout_dec` = high

`behind` => `sigout_inc` = low, `sigout_dec` = high

The output signals are expected to be used by a charge_pump.

Instance Parameters

`vlogic_high` = output voltage for high [V]

`vlogic_low` = output voltage for low [V]

`vtrans` = voltages above this at input are considered high [V]

`tdel`, `trise`, `tfall` = {usual} [s]

© 2000-2015 All Rights Reserved.

Mixer

Terminals

`vin1`, `vin2`: [V,A]

`vout`: [V,A]

Description

`vout` = gain * `vin1` * `vin2`

Instance Parameters

`gain` = gain of mixer []

© 2000-2015 All Rights Reserved.

Noise Source

Terminals

`vin`: [V,A]

`vout`: [V,A]

Description

This is an approximate white noise source.

Note: It is *not* a true white source because its output changes every time step and the time step is dependent on the behavior of the circuit.

Instance Parameters

`amp` = amplitude of the output signal about 0 [V]

© 2000-2015 All Rights Reserved.

PCM Demodulator, 8-Bit

Terminals

`vin`: input signal [V,A]

`vout`: demodulated signal [V,A]

Description

The PCM demodulator samples `vin` at `bit_rate` [Hz] starting at `tstart` + 0.5/`bit_rate`. Each set of 8 samples is considered a binary word, and these sets are converted to an output voltage using a linear 8-bit binary code with 0 representing `vin_min` and 255 representing `vin_max`. The first bit received is the LSB, bit 0; the last bit received is the MSB, bit 7.

The output rate is `bit_rate`/8.

Instance Parameters

`freq_sample` = sample frequency [Hz]

`tstart` = when to start sampling [s]

`vout_min` = minimum input voltage [V]

`vout_max` = maximum input voltage [V]

`vtrans` = voltages above this at input are considered high [V]

`tdel`, `trise`, `tfall` = {usual} [s]

© 2000-2015 All Rights Reserved.

PCM Modulator, 8-Bit

Terminals

`vin`: input signal [V,A]

`vout`: modulated signal [V,A]

Description

The PCM modulator samples `vin` at a `sample_freq` [Hz] starting at `tstart`. Once a sample has been obtained, it is converted to a linear 8-bit binary code with 0 representing `vin_min` and 255 representing `vin_max`.

The bits are in the code and are sequentially put through `vout` at a rate 8 times `sample_freq` with `vlogic_high` signifying a 1 and `vlogic_low` signifying a 0. The first bit transmitted is the LSB, bit 0; the last bit transmitted is the MSB, bit 7.

Clipping occurs when the input is outside `vin_min` and `vin_max`.

Instance Parameters

`sample_freq` = sample frequency [Hz]

`tstart` = when to start sampling [s]

`vin_min` = minimum input voltage [V]

`vin_max` = maximum input voltage [V]

`vlogic_high` = output voltage for high [V]

`vlogic_low` = output voltage for low [V]

`tdel`, `trise`, `tfall` = {usual} [s]

© 2000-2015 All Rights Reserved.

Phase Detector

Terminals

`vlocal_osc`: local oscillator voltage [V,A]

`vin_rf`: PLL radio frequency input voltage [V,A]

`vif`: intermediate frequency output voltage [V,A]

Instance Parameters

`gain` = gain of detector []

`mtype` = type of phase detection to be used; chopper or multiplier []

© 2000-2015 All Rights Reserved.

Phase Locked Loop

Terminals

`vlocal_osc`: local oscillator voltage [V,A]

`vin_rf`: PLL radio frequency input voltage [V,A]

`vout`: voltage proportional to the frequency being locked onto [V,A]

`vout_ph_det`: output of the phase detector [V,A]

Instance Parameters

`vco_gain` = gain of VCO cell [Hz/V]

`vco_center_freq` = VCO oscillation frequency [Hz]

`phase_detect_type` = type of phase detection cell to be used []

`vout_filt_bandwidth` = bandwidth of the low-pass filter on output [Hz]

© 2000-2015 All Rights Reserved.

PM Demodulator

Terminals

`vin`: PM RF input signal [V,A]

`vout`: demodulated signal [V,A]

Description

Demodulates the signal in `vin` and outputs it as `vout`.

Consists of four stages in series:

1. RF amp stage amplifiers `vin`.
2. Detector stage is a phase locked loop (PLL)—the phase detector output is tapped.
3. AF filters stage is a low-pass filter that extracts the AF signal—has gain of one, and two poles at `af_wn` [rad/s].
4. AF amp stage amplifies by `af_gain` and adds `af_lev_shift`.

Instance Parameters

`rf_gain` = gain of RF (radio frequency) stage []

`pll_out_bw` = bandwidth of PLL output filter [Hz]

`pll_vco_gain` = gain of the PLL's VCO []

`pll_vco_cf` = the center frequency of the PLLs [Hz]

`af_wn` = location of both AF (audio frequency) filter poles [Hz]

`af_gain` = gain of the audio amplifier []

`af_lev_shift` = added to AF signal after amplification and filtering [V]

© 2000-2015 All Rights Reserved.

PM Modulator

Terminals

`vin`: input signal [V,A]

`vout`: modulated signal [V,A]

Description

`vout` = `amp` * sin(2 * PI * `f_carrier` * `time` + `phase_max` * `vin_adjusted`)

where `vin_adjusted` is scaled version of `vin` that lies within the +/-1 range.

Before scaling, `vin` is limited to the range between `vin_max` and `vin_min` by clipping.

Instance Parameters

`f_carrier` = carrier frequency [Hz]

`amp` = amplitude of the PM modulator output []

`vin_max` = maximum acceptable input (clipping occurs above this) [V]

`vin_min` = minimum acceptable input (clipping occurs above this) [V]

`phase_max` = the phase shift produced when the modulating signal is at `vin_max` [rad]

© 2000-2015 All Rights Reserved.

QAM 16-ary Demodulator

Terminals

`vin`: input [V,A]

`vout_bit[0-4]`: demodulated codes [V,A]

Description

This model is of a QPSK (quadrature phase shift key) modulator.

Demodulates a 16ary encoded QAM signal by separately sampling the input signal at 90 degrees (q-phase) and 180 degrees (i-phase).

This model does not contain a dynamic synchronizing mechanism for ensuring that sampling occurs at the correct time points. Synchronizing can be statically adjusted by changing `tstart`. `tstart` should correspond to when the input QAM signal is at 0 degrees.

The i-phase contains the two MSBs. The q-phase contains the two LSBs.

The constellation diagram representing this relationship follows.

```
                        ^
                       / \
                        | Q phase
              ____________|_____________
             |      |      |      |
             | 0011 | 0111 | 1011 | 1111 |
     0       |______|______|______|______|
             |      |      |      |
     V       | 0010 | 0110 | 1010 | 1110 |
     o   ____|______|______|______|______|___________\ I Phase
     l       |      |      |      |                  /
     t       | 0001 | 0101 | 1001 | 1101 |
     s       |______|______|______|______|
             |      |      |      |
             | 0000 | 0100 | 1000 | 1100 |
             |______|______|______|______|
                          |
                          |
                     0 Volts
```

Each code box is `vbox_width` volts wide.

Instance Parameters

`freq` = demodulation frequency [Hz]

© 2000-2015 All Rights Reserved.

`vbox_width` = width of modulation code box in constellation diagram [V]

`vlogic_high` = output voltage for high [V]

`vlogic_low` = output voltage for low [V]

`tdel`, `trise`, `tfall` = {usual} [s]

© 2000-2015 All Rights Reserved.

Quadrature Amplitude 16-ary Modulator

Terminals

`vin_b[0-3]`: bits of input code [V,A]

`vout`: modulated output [V,A]

Description

This model does 16 value (4-Bit) QAM.

It encodes the MSBs on the i-phase and the LSBs on the q-phase. Its constellation diagram can be represented as

```
                        / \
                         | Q phase
              _____________|_____________
             |      |      |      |      |
             | 0011 | 0111 | 1011 | 1111 |
     0       |______|______|______|______|
             |      |      |      |      |
     V       | 0010 | 0110 | 1010 | 1110 |
     o   ____|______|______|______|______|___________\ I Phase
     l       |      |      |      |      |           /
     t       | 0001 | 0101 | 1001 | 1101 |
     s       |______|______|______|______|
             |      |      |      |      |
             | 0000 | 0100 | 1000 | 1100 |
             |______|______|______|______|
                         |
                      0 Volts
```

The two MSBs are encoded on the i-phase. The two LSBs are encoded on the q-phase.

The modulating formula is Vout = i_phase * cos(wt) + q_phase * sin(wt)

i_phase and q_phase vary between -`phase_ampl` and `phase_ampl`.

Instance Parameters

`freq` = modulation frequency [Hz]

`phase_ampl` = amplitude of the i-phase and q-phase signals [V]

`vtrans` = voltages above this at input are considered high [V]

`tdel`, `trise`, `tfall` = {usual} [s]

© 2000-2015 All Rights Reserved.

QPSK Demodulator

Terminals

`vin`: input [V,A]

`vout_i`: i-phase output [V,A]

`vout_q`: q-phase output [V,A]

Description

Does a QPSK demodulation on the input signal. It does not contain a dynamic synchronizing mechanism. Synchronizing can be adjusted by changing `tstart`.

Detection works by separately sampling the i-phase of `vin` and the q-phase of `vin` at `freq` Hz and 90 degrees out of phase. The first i-phase sample is done at `tstart` + 0.5/`freq`, the next 1/`freq` seconds later, etc. Similarly, the first q-phase sample is done at `tstart` + 0.25/`freq`, the next 1/`freq` seconds later, and so on.

For the i-phase, a high is detected if the sample < -`vthresh`. For the q-phase, a high is detected if the sample > `vthresh`.

Instance Parameters

`freq` = demodulation frequency [Hz]

`vthresh` = threshold detection voltage [V]

`vlogic_high` = output voltage for high [V]

`vlogic_low` = output voltage for low [V]

`tstart` = time at which demodulation starts [s]

`tdel`, `trise`, `tfall` = {usual} [s]

© 2000-2015 All Rights Reserved.

QPSK Modulator

Terminals

`vin_i`, `vin_q`: quadrature inputs [V,A]

`vout`: modulator output [V,A]

Description

This takes two sampled quadrature inputs and does QPSK modulation on them.

Instance Parameters

`freq` = modulation frequency [Hz]

`amp` = modulator amplitude [V]

`vtrans` = voltages above this at input are considered high [V]

`tdel`, `trise`, `tfall` = {usual} [s]

© 2000-2015 All Rights Reserved.

Random Bit Stream Generator

Terminal

`vout:` [V,A]

Description

This model generates a random stream of bits.

Instance Parameters

`tperiod` = period of stream [s]

`seed` = random number seed []

`vlogic_high` = output voltage for high [V]

`vlogic_low` = output voltage for low [V]

`tdel`, `trise`, `tfall` = {usual} [s]

© 2000-2015 All Rights Reserved.

Transmission Channel

Terminals

`vin`: AM input signal [V,A]

`vout`: rectified AM signal [V,A]

Description

`vin` has `noise_amp` noise added to it and the resultant is attenuated by `attenuation` [dB].

Instance Parameters

`attenuation` = 20log10 attenuation [dB]

`noise_amp` = amplitude of noise added to `vin` *before* attenuation [V]

© 2000-2015 All Rights Reserved.

Voltage-Controlled Oscillator

Terminals

`vin`: oscillation-controlling voltage [V,A]

`vout`: [V,A]

Instance Parameters

`amp` = amplitude of the output signal [V]

`center_freq` = center frequency of oscillation frequency when `vin` = 0 [Hz]

`vco_gain` = oscillator conversion gain [Hz/volt]

© 2000-2015 All Rights Reserved.

© 2000-2015 All Rights Reserved.

D

Verilog-AMS Keywords

This appendix contains the list of the Cadence® Verilog®-AMS language keywords. *Keywords* are predefined nonescaped identifiers that you use to define the language constructs.

The simulator does not interpret a Verilog-AMS keyword preceded by a backslash character as a keyword. For more information, see "Identifiers" on page 50.

```
above
abs
absdelay
acos
acosh
ac_stim
aliasparam
always
analog
analysis
and
asin
asinh
assign
atan
atan2
atanh
begin
bound_step
branch
buf
bufif0
bufif1
case
casex
casez
ceil
cmos
connectrules
cos
cosh
cross
ddt
ddx
deassign
default
defparam
delay
disable
discipline
discontinuity
driver_update
edge
else
end
endcase
endconnectrules
enddiscipline
endfunction
endmodule
endnature
endparamset
endprimitive
endspecify
endtable
endtask
event
exclude
exp
final_step
flicker_noise
floor
flow
for
force
forever
fork
from
function
generate
genvar
ground
highz0
highz1
hypot
idt
idtmod
if
ifnone
inf
initial
```


© 2000-2015 All Rights Reserved.

```
initial_step
inout
input
integer
join
laplace_nd
laplace_np
laplace_zd
laplace_zp
large
last_crossing
limexp
ln
localparam
log
macromodule
max
medium
min
module
nand
nature
negedge
net_resolution
nmos
noise_table
nor
not
notif0
notif1
or
output
parameter
pmos
posedge
potential
pow
primitive
pull0
pull1
pullup
pulldown
pwr
rcmos
real
realtime
reg
release
repeat
rnmos
rpmos
rtran
rtranif0
rtranif1
scalared
sin
sinh
slew
small
specify
specparam
sqrt
strobe
strong0
strong1
supply0
supply1
table
table_model
tan
tanh
task
temperature
time
timer
tran
tranif0
tranif1
transition
tri
tri0
tri1
triand
trior
trireg
vectored
vt
wait
wand
weak0
weak1
while
white_noise
wire
wor
wreal
xnor
xor
zi_nd
zi_np
zi_zd
zi_zp
```


© 2000-2015 All Rights Reserved.

Keywords to Support Backward Compatibility

Cadence provides the keywords in this section for backward compatibility only.

`abstol`	`delay`	`units`
`access`	`discontinuity`	`vt`
`bound_step`	`idt_nature`	
`ddt_nature`	`temperature`	

Discipline and Nature Keywords

Use the following keywords between the keywords `discipline` and `enddiscipline` (for a discipline) and between the keywords `nature` and `endnature` (for a nature) only.

`abstol`	`ddt_nature`	`idt_nature`
`access`	`discrete`	`units`
`continuous`	`domain`	

Connect Rules Keywords

Use the following connect rules keywords between the keywords `connectrules` and `endconnectrules` only.

`connect`	`resolveto`
`merged`	`split`

© 2000-2015 All Rights Reserved.

© 2000-2015 All Rights Reserved.

E

Unsupported Elements of Verilog-AMS

The Cadence® Verilog®-AMS language is specified in the *Verilog-AMS Language Reference Manual: Analog & Mixed-Signal Extensions to Verilog HDL*, produced by Open Verilog International. The Cadence implementation of Verilog-AMS does not support all of the specified elements of the Verilog-AMS language in all the contexts in which the language specification says they are to be supported.

The tables in this section list the unsupported elements according to the following classifications:

- Unsupported elements that should be supported in behavioral contexts, such as: expressions; initial, always, and analog blocks; and user-defined tasks and functions.
- Unsupported elements that should be supported in analog contexts, such as analog blocks and analog functions.
- Unsupported elements that should be supported in structural contexts such as those that exist outside behavioral contexts and have to do with hierarchy, natures, and disciplines.
- Unsupported elements that should be supported in digital contexts, such as initial and always blocks, and user-defined digital tasks and digital functions.

© 2000-2015 All Rights Reserved.

Unsupported Elements for Behavioral Contexts

Feature	Comment
Net attributes, except for `net.potential.abstol` and `net.flow.abstol`, which are supported	
String variables	Cannot be assigned in analog block. Cannot be used in `$strobe` in the analog block.
Using probes containing vector net elements in a digital block.	
Out-of-module references	Not supported to analog nets, branches, or nature attributes.
Standard math and transcendental functions	Inside the analog block, expressions that contain hierarchical references are not supported. Domain ranges are checked only for `exp`, `sqrt`, `pow`, and `atan2`.
`$rdist functions`	Supported in analog contexts but not in digital contexts.
Global events	The `@analog_identifier` form is not supported.
`@timer`	Not supported in the digital context.
`$realtime`	Not supported in the analog context. Use `$abstime` instead, in the analog context.

Unsupported Elements for Behavioral Analog Contexts

Feature	Comment
Parameters used to specify ranges for the `generate` statement	
Parameter declarations	Not supported in analog user-defined functions.
The `genvar` statement	
Arrays passed to functions	

© 2000-2015 All Rights Reserved.

Unsupported Elements for Behavioral Analog Contexts

Feature	Comment
`ddt` (time derivative) operator	Nesting is not allowed. For example, `ddt(ddt())` is prohibited. The `abstol` argument has no effect. A nature cannot be used as an argument.
Laplace transform filters	Parameter-sized array arguments are not supported.
Analog functions	Parameters are not allowed as arguments.
Analog vector nets	Not supported for the Tcl `value` command.
Digital transition sensitivities	Transition sensitivities such as `@dVal` are not supported in analog contexts. Event sensitivities such as `@(posedge dVal or negedge dVal)` must be used instead.
The concatenation operator	
`$stime`	
`$time`	
`$monitor` and `$fmonitor`	
`$monitor off/on`	
`$printtimescale`	
`$timeformat`	
`$bitstoreal`	
`$itor`	
`$realtobits`	
`$rtoi`	
`$readmen` used with the `%b`, `%h`, and `%r` specifications.	

© 2000-2015 All Rights Reserved.

Unsupported Elements for Structural Contexts

Feature	Comment
Derived natures	
Overriding nature attributes from disciplines	
Array ranges for nets	
Array ranges for ground nodes	
Parameter arrays	Parameter array declarations are not supported. Parameter array assignments are supported only in analog primitives.
Module instantiation inside a `generate` block	`Generate` blocks, because they can be used only in `analog` blocks, can contain only behavioral code.
Parameter-sized vector nets	
User-defined attributes	Only the Cadence `huge`, `blowup`, and `maxdelta` attributes are supported.
Vector branches	
Vector arguments for simulator functions	
Vector ground nodes	
Parameter-sized ports	
Out-of-module references	Supported for voltage probes on nets. Not supported for branches, or for nature attributes.
`Discipline resolution`	If out-of-module references are used in port connections, the port discipline is not used to determine the discipline of the out-of-module reference.
`net_resolution`	
Nodesets on continuous nets	

© 2000-2015 All Rights Reserved.

The next list contains only VPI functions. The unsupported aspect of these functions is that they cannot be called with `wreal` arguments, digital real vectors, or analog arguments of any kind.

Unsupported Elements for Behavioral Digital Contexts When wreal Arguments Are Used

Feature	Comment
`@timer`	
`$compare`	
`$strobe_compare`	
`$countdrivers`	
`$deposit`	
`$incpattern_read`	
`$async$and$array`	
`$async$nand$array`	
`$async$or$array`	
`$async$nor$array`	
`$sync$and$array`	
`$sync$nand$array`	
`$sync$or$array`	
`$sync$nor$array`	
`$async$and$plane`	
`$async$nand$plane`	
`$async$or$plane`	
`$async$nor$plane`	
`$sync$and$plane`	
`$sync$nand$plane`	
`$sync$or$plane`	
`$sync$nor$plane`	
`$q_initialize`	

© 2000-2015 All Rights Reserved.

Unsupported Elements for Behavioral Digital Contexts When wreal Arguments Are Used, *continued*

Feature	Comment
`$q_full`	
`$q_remove`	
`$q_add`	
`$q_exam`	
`$scope`	
`$dumpports`	
`$dumpports_close`	
`$lsi_dumpports`	
`$lsi_close`	
`$writememb`	
`$writememh`	
`$recordvars`	
`$recordfile`	
`$recordon`	
`$recordoff`	
`$signalscan`	
`$signalscankill`	
`$signalscanabort`	
`$recordabort`	
`$recordclose`	
`$recordfilecopy`	
`$recordfilechange`	
`$signalscanconnect`	
`$signalscancommand`	
`$recordsetup`	

© 2000-2015 All Rights Reserved.

The Cadence™ Verilog®-AMS language is specified in Annex C of the Verilog-AMS *Language Reference Manual: Analog & Mixed-Signal Extensions to Verilog HDL*, produced by Open Verilog International. The Cadence implementation of Verilog-AMS does not support all of the specified elements of the Verilog-AMS language in all the contexts in which the language specification says they are to be supported.

The tables in this section list the unsupported elements according to the following classifications:

- Unsupported elements that should be supported in behavioral contexts, such as expressions; initial, always, and analog blocks; user-defined tasks and functions.
- Unsupported elements that should be supported in analog contexts, such as analog blocks and analog functions.
- Unsupported elements that should be supported in structural contexts such as those outside behavioral contexts, and having to do with hierarchy, natures, and disciplines.
- Unsupported elements that should be supported in digital contexts, such as initial and always blocks, and user-defined digital tasks and digital functions.

© 2000-2015 All Rights Reserved.

Unsupported Elements for Behavioral Contexts

Feature	Comment
Hierarchical names, except for `node.potential.abstol` and `node.flow.abstol`, which are supported	
Using `1'b1` constant specification	
String variables	Cannot be assigned in analog block. Cannot be used in `$strobe` in the analog block.
Using probes containing vector net elements in a digital block.	
String variables	
The `%b` and %B format characters	
The `\ddd` octal specification of a character	
The concatenation operator	
Enforcement of `input`, `output`, and `inout`	
Out-of-module references	Not supported to analog nets, branches, or nature attributes.
Case equality (`===` and `!==`) operators	
`casex` and `casez` statements	
Standard math and transcendental functions	Outside the analog block, arguments to functions must be constant expressions. Inside the analog block, expressions that contain hierarchical references are not supported. Domain ranges are checked only for `exp`, `sqrt`, `pow`, and `atan2`.
`$rdist functions`	
Global events	The `@`*`analog_identifier`* form is not supported.
`@timer`	Not supported in the digital context.
Driver access functions	`Driver_update` is not supported.
`$realtime`	Not supported in the analog context. In that context, use `$abstime` instead.

© 2000-2015 All Rights Reserved.

Unsupported Elements for Behavioral Contexts

Feature	Comment
`$stime`	
`$time`	
`$monitor` and `$fmonitor`	
The `%b`, `%o`, and `%h` specifications for `$display`, `$fdisplay`, `$write`, `$fwrite`, `$monitor`, `$fmonitor`, `$strobe`, and `$fstrobe`	
`$monitor off/on`	
`$printtimescale`	
`$timeformat`	
`$bitstoreal`	
`$itor`	
`$realtobits`	
`$rtoi`	
`$readmen` used with the `%b`, `%h`, and `%r` specifications.	
`$random`	The seed must be an integer constant expression, not an unsigned integer.

© 2000-2015 All Rights Reserved.

Unsupported Elements for Behavioral Analog Contexts

Feature	Comment
Parameters used to specify ranges for the `generate` statement	
Parameter declarations	Not supported in analog user-defined functions.
The `genvar` statement	
Arrays passed to functions	
Accessing `X` and `Z` bits of a discrete net from a continuous context.	
`ddt` (time derivative) operator	Nesting is not allowed. For example, `ddt(ddt())` is prohibited. The `abstol` argument has no effect. A nature cannot be used as an argument.
`idt` (time integral) operator	The `abstol` argument has no effect. A nature cannot be used as an argument.
idtmod (circular integrator) operator	The `abstol` argument has no effect. A nature cannot be used as an argument.
Transition filter	The `time_tol` argument is not supported.
Laplace transform filters	Parameter-sized array arguments are not supported.
Analog functions	Parameters are not allowed as arguments.
`` `default_transition `` directive	
analog vector nets	Not supported for the Tcl `value` command.

Unsupported Elements for Structural Contexts

Feature	Comment
Ordered parameter lists in hierarchical instantiation	Not supported for analog primitives.
Named nodes in hierarchical instantiation	

© 2000-2015 All Rights Reserved.

Unsupported Elements for Structural Contexts

Feature	Comment
Connecting the ports of instantiated analog primitives to digital wires	
Derived natures	
Overriding nature attributes from disciplines	
Array ranges for nets	
Array ranges for ground nodes	
Parameter arrays	Parameter array declarations are not supported. Parameter array assignments are supported only in analog primitives.
Parameter-sized vector nets	
The `defparam` statement	
The `ground` declaration	
User-defined attributes	Only the Cadence `huge`, `blowup`, and `maxdelta` attributes are supported.
Vector branches	
Vector arguments for simulator functions	
Vector ground nodes	
Parameter-sized ports	
Out-of-module references	Not supported to analog nets, branches, or nature attributes.
`Discipline resolution`	If out-of-module references are used in port connections, the port discipline is not used to determine the discipline of the out-of-module reference.
`net_resolution`	

© 2000-2015 All Rights Reserved.

Many of the items in the next list are VPI functions. The unsupported aspect of these functions is that they cannot be called with `wreal` arguments, digital real vectors, or analog arguments of any kind.

Unsupported Elements for Behavioral Digital Contexts

Feature	Comment
Analog transition sensitivity	Not supported in digital contexts.
`$compare`	
`$strobe_compare`	
`$countdrivers`	
`$deposit`	
`$incpattern_read`	
`$async$and$array`	
`$async$nand$array`	
`$async$or$array`	
`$async$nor$array`	
`$sync$and$array`	
`$sync$nand$array`	
`$sync$or$array`	
`$sync$nor$array`	
`$async$and$plane`	
`$async$nand$plane`	
`$async$or$plane`	
`$async$nor$plane`	
`$sync$and$plane`	
`$sync$nand$plane`	
`$sync$or$plane`	
`$sync$nor$plane`	
`$q_initialize`	
`$q_full`	

© 2000-2015 All Rights Reserved.

Unsupported Elements for Behavioral Digital Contexts

Feature	Comment
`$q_remove`	
`$q_add`	
`$q_exam`	
`$scope`	
`$dumpports`	
`$dumpports_close`	
`$lsi_dumpports`	
`$lsi_close`	
`$writememb`	
`$writememh`	
`$recordvars`	
`$recordfile`	
`$recordon`	
`$recordoff`	
`$signalscan`	
`$signalscankill`	
`$signalscanabort`	
`$recordabort`	
`$recordclose`	
`$recordfilecopy`	
`$recordfilechange`	
`$signalscanconnect`	
`$signalscancommand`	
`$recordsetup`	

© 2000-2015 All Rights Reserved.

The items in the next list are deprecated features. The Cadence implementation of Verilog-AMS supports these features, but might not in the future. These features are no longer supported in the standard specification of the language.

Deprecated features

Deprecated feature	To comply with the current standard,...
`$dist_` functions in the analog block	Consider using the `$rdist` functions.
`generate` statement in the analog block	Use the `genvar` statement.
The second argument of the `cross` operator being a non-integer type	Change the second operator to an integer type.
Using for, while and repeat loop statements for the timer function	Use a `genvar` loop for the timer function.
Unassigned variables	Assign each variable. Unassigned variables are considered digital variables.
`generate`	Use a `genvar` loop instead.
The second argument of the `last_crossing` operator being a non-integer type	Change the second operator to an integer type.

The items in the next list are Cadence extensions. These features are not part of the standard specification of the language.

Cadence extensions

Feature
Cadence syntax for attributes
`mfactor` attribute
`dynamicparams`
`$cds_iprobe`
Inherited parameters

© 2000-2015 All Rights Reserved.

F

Updating Verilog-A Modules

The Verilog®-A language is a subset of Verilog-AMS, but some of the language elements in that subset have changed since Verilog-A was released by itself. As a consequence, you might need to revise your Verilog-A modules before using them as Verilog-AMS modules. The following table highlights the differences.

Feature	Independent Verilog-A	Verilog-AMS	Change type
Analog time	`$realtime`	`$abstime`	new
Empty discipline	Predefined as type `wire`	Type not defined	default definition
Implicit nodes	’default_nodetype discipline_identifier default: `wire`	default type: empty discipline, no domain type	default definition
`initial_step`	Default = `TRAN`	Default = `ALL`	default definition
`final_step`	Default = `TRAN`	Default = `ALL`	default definition
`$realtime`	`$realtime`: timescale =1 sec	`$realtime`: timescale= `’timescale` def=1n. See `$abstime`	definition
Discontinuity function	`discontinuity(`*x*`)`	`$discontinuity(`*x*`)`	syntax
Limiting exponential function	`$limexp(`*expression*`)`	`limexp(`*expression*`)`	syntax

© 2000-2015 All Rights Reserved.

Feature	Independent Verilog-A	Verilog-AMS	Change type
Port branch access	`I(a,a)`	`I(<a>)`	syntax
	Note: Cadence® Verilog-A supports only this form.	**Note:** This form is *not* supported in Cadence Verilog-A.	
Timestep control (maximum stepsize)	`bound_step(const_expression)`	`$bound_step(expr)`	syntax
Continuous waveform delay	`delay()`	`absdelay()`	syntax
User-defined analog functions	Function	Analog function	syntax
Discipline domain	N/A, assumed continuous	Now continuous (default) and discrete	Extension
Time tolerance on timer functions	N/A	Supports additional time tolerance argument for `timer()`	Extension
Time tolerance on transition filter	N/A	Supports additional time tolerance argument for `transition()`	Extension
'default_nodetype	`'default_nodetype`	`'default_discipline`	Obsolete
Generate statement	`generate`	N/A	Obsolete
Null statement	`;`	Limited to `case`, `conditional`, and `event` statements	Obsolete

Suggestions for Updating Models

The remainder of this appendix describes some of these changes in greater detail and suggests ways of modifying your existing Verilog-A models so that they work in version 4.4.6 of Verilog-A and in version 1.0 of Verilog-AMS. The changes recommended here might not work with 4.4.5 or earlier versions of Verilog-A.

© 2000-2015 All Rights Reserved.

Current Probes

OVI Verilog-A 1.0 syntax for a current probe is `I(a,a)`. OVI Verilog-AMS 2.0 changes this to `I(<a>)`.

Suggested change: Put `I(<a>)` inside an `` `ifdef __VAMS_ENABLE__ ``, which makes the syntax effective only for Verilog-AMS. For example, change

```
iin_val = I(vin,vin);
```

to

```
`ifdef __VAMS_ENABLE__
    iin_val = I(<vin>);
`else
    iin_val = I(vin,vin);
`endif
```

Verilog-A warning: None

Analog Functions

OVI Verilog-A 1.0 declaration of an analog function is

```
function name;
```

OVI Verilog-AMS 2.0 uses the syntax

```
analog function name;
```

Suggested change: Prefix all function declarations by the word `analog`. For example, change

```
function real foo;
```

to

```
analog function real foo;
```

Verilog-A warning: None

NULL Statements

OVI Verilog-A 1.0 allows `NULL` statements to be used anywhere in an analog block. OVI Verilog-AMS 2.0 allows NULL statements to be used only after `case` statements or event control statements.

Suggested change:

Remove illegal NULL statements. For example, change

© 2000-2015 All Rights Reserved.

```
begin
end;
```

to

```
begin
end
```

Verilog-A warning: None

inf Used as a Number

Spectre Verilog-A allows `'inf` to be used as a number. OVI Verilog-AMS 2.0 allows `'inf` to be used only on ranges.

Suggested change:

Change all illegal references to `'inf` to a large number such as 1M. For example, change;

```
parameter real points_per_cycle = inf from [6:inf];
```

to

```
parameter real points_per_cycle = 1M from [6:inf];
```

Verilog-A warning: None

Changing Delay to Absdelay

OVI Verilog-A 1.0 uses `delay` as the analog delay operator but OVI Verilog-AMS 2.0 uses `absdelay`.

Suggested change: Change `delay` to `absdelay`. This change usually leads to faster, better results.

Verilog-A warning: None

Changing $realtime to $abstime

OVI Verilog-A 1.0 uses `$realtime` as absolute time but OVI Verilog-AMS 2.0 uses `$abstime`.

Suggested change: Change `$realtime` to `$abstime`.

Verilog-A warning: Yes

© 2000-2015 All Rights Reserved.

Changing bound_step to $bound_step

OVI Verilog-A 1.0 uses `bound_step` for step bounding but OVI Verilog-AMS 2.0 uses `$bound_step`.

Suggested change: Change `bound_step` to `$bound_step`.

Verilog-A warning: None

Changing Array Specifications

OVI Verilog-A 1.0 uses `[]` to specify arrays but OVI Verilog-AMS 2.0 uses `{}`.

Suggested change: Change `[]` to `{}`. For example, change

```
svcvs #(.poles([-2*`PI*bw,0])) output_filter
```

to

```
svcvs #(.poles({-2*`PI*bw,0})) output_filter
```

Verilog-A warning: None

Chained Assignments Made Illegal

Spectre-Verilog-A allows chained assignments, such as `x=y=z`, but OVI Verilog-AMS 2.0 makes this illegal.

Suggested change: Break chain assignments into single assignments. For example, change

```
x=y=z;
```

to

```
y = z; x = y;
```

Verilog-A warning: None

Real Argument Not Supported as Direction Argument

Spectre-Verilog-A allows real numbers to be used for the arguments of `@cross` and `last_crossing` but OVI Verilog-AMS 2.0 makes this illegal.

Suggested change: Change the real numbers to integers. For example, change

```
@(cross(V(in),1.0) begin
```


© 2000-2015 All Rights Reserved.

to

```
@(cross(V(in),1) begin
```

Verilog-A warning: None

$limexp Changed to limexp

OVI Verilog-A 1.0 uses `$limexp`, but OVI Verilog-AMS 2.0 uses `limexp`.

Suggested change: Change `$limexp` to `limexp`. For example, change

```
I(vp,vn) <+ is * ($limexp(vacross/$vt) - 1);
```

to

```
I(vp,vn) <+ is * (limexp(vacross/$vt) - 1);
```

Verilog-A warning: None

'if 'MACRO is Not Allowed

Spectre-Verilog-A allows users to type `'if '`*`MACRO`*, but OVI Verilog-AMS 2.0, 1.0 and 1364 say this is illegal.

Suggested change: Change `'if '`*`MACRO`* to `'if `*`MACRO`* (Do not use the tick mark for the macro). For example, change

```
`ifdef `CHECK_BACK_SURFACE
```

to

```
`ifdef CHECK_BACK_SURFACE
```

Verilog-A warning: None

$warning is Not Allowed

Spectre-Verilog-A supports `$warning`, but OVI Verilog-AMS 2.0, 1.0 and 1364 do not support this as a standard built-in function.

Suggested change: Change `$warning` to `$strobe`.

Verilog-A warning: None

© 2000-2015 All Rights Reserved.

discontinuity Changed to $discontinuity

OVI Verilog-A 1.0 uses `discontinuity`, but OVI Verilog-AMS 2.0 uses `$discontinuity`.

Suggested change: Change `discontinuity` to `$discontinuity`.

Verilog-A warning: None

© 2000-2015 All Rights Reserved.

© 2000-2015 All Rights Reserved.

Glossary

A

ADC

Abbreviation for *Analog-to-Digital Converter*.

A circuit that converts analog signals to discrete states or levels. The output numbers are usually power of two sent to a digital bus.

AF

A wave that can be heard by humans; frequency is in the range of 20-20,000 hertz.

analog context

The context of statements that appear in the body of an `analog` block in a mixed-signal (analog-digital) model such as Verilog-AMS. Anything evaluated by the analog simulator, such as an analog simultaneous statement, in the VHDL-AMS model.

analog HDL

An analog hardware description language for describing analog circuits and functions.

analog port

A port whose connections are both analog.

analog signal

A hierarchical collection of interconnected nets, where all the nets are of a continuous discipline.

B

behavioral description

The mathematical mapping of inputs to outputs for a module, including intermediate variables and control flow.

behavioral model

A version of a module with a unique set of parameters designed to model a specific component.

© 2000-2015 All Rights Reserved.

block

A level within the behavioral description of a module, delimited by `begin` and `end`.

branch

A path between two nodes. Each branch has two associated quantities, a potential and a flow, with a reference direction for each.

C

CDF

Abbreviation for *Component Description Formats*.

Properties attached to a library element or cell view. Cadence® Virtuoso® Analog Design Environment netlister uses CDF properties to dump the element instantiation in the simulation netlist.

component

The fundamental unit within a system. A component encapsulates behavior and structure. Modules and models can represent a single component, or a component with many subcomponents.

connect module

A module automatically or manually inserted by using the `connect` statement, which contains the code required to translate and propagate signals between the analog and digital nets comprising a signal.

constitutive relationships

The expressions and statements that relate the outputs, inputs, and parameters of a module. These relationships constitute a behavioral description.

continuous context

Same as analog context—the context of statements that appear in the body of an `analog` block in a mixed-signal (analog-digital) model such as Verilog-AMS. Anything evaluated by the analog simulator, such as an analog simultaneous statement, in the VHDL-AMS model.

continuous net

A net of a continuous discipline.

continuous variable

A variable whose value is calculated in the continuous domain.

© 2000-2015 All Rights Reserved.

control flow

The conditional and iterative statements that control the behavior of a module. These statements evaluate variables (counters, flags, and tokens) to control the operation of different sections of a behavioral description.

child module

A module instantiated inside the behavioral description of another, “parent” module.

D

DAC

Abbreviation for *digital-to-analog converter*.

A device that accepts a digital input and produces an analog output. For example, an 8-bit DAC would convert an input of 8 binary signals into a single analog (real) value.

DFII

The former Cadence Design Framework II, which has now become Virtuoso Design Environment in IC 6.1.

DNL

Abbreviation for *Differential Nonlinearity*.

Classical static measurement for the ADC circuit that shows the difference between the ideal and measured ADC step width in least significant bit (LSB) units. The ADC DNL goal is to stay within ± 0.5 LSB.

declaration

A definition of the properties of a variable, node, port, parameter, or net.

digital context

The context of statements that appear in a location other than an `analog` block.

digital island

The set of drivers and receivers interconnected by a digital net or a contiguous collection of digital nets.

digital port

A port whose connections are both digital.

digital signal

A hierarchical collection of interconnected nets where all the nets are of a discrete discipline.

© 2000-2015 All Rights Reserved.

discipline

A user-defined binding of potential and flow natures and other attributes to a net. Disciplines are used to declare analog nets and can also be used as part of the declaration of digital nets.

discipline resolution

The process of assigning a domain and discipline to nets whose domain and discipline are otherwise unknown (or whose discipline is `wire`.)

discrete context

The context of statements that appear in a location other than an `analog` block, for example `initial` and `always` blocks, in mixed-signal (analog-digital) models such as Verilog-AMS. Anything evaluated by the digital simulator such as process blocks and signal assignment statements, in the VHDL-AMS model.

discrete net

A net of a discrete discipline.

discrete variable

A variable whose value is calculated in the discrete domain.

driver-receiver segregation

The conceptual severing of the connections between drivers and receivers that occurs in mixed nets. When driver-receiver segregation occurs, digital signals propagate only through connect modules inserted between the drivers and receivers.

dynamic expression

An expression whose value is derived from the evaluation of a derivative (the `ddt` function). Dynamic expressions define time-dependent module behavior. Some functions cannot operate on dynamic expressions.

E

element

The fundamental unit within a system, which encapsulates behavior and structure (also known as a *component*).

© 2000-2015 All Rights Reserved.

F

flow

One of the two fundamental quantities used to simulate the behavior of a system. In electrical systems, flow is current.

G

global declarations

Declarations of variables and parameters at the beginning of a behavioral description.

ground

The reference node, which has a potential of zero.

instance

A named occurrence of a component created from a module definition. One module definition can occur in multiple instances.

instantiation

The process of creating an instance from a module definition or simulator primitive, and defining the connectivity and parameters of that instance. (Placing an instance in a circuit or system.)

H

hierarchical system

A system in which the components are also systems.

K

Kirchhoff's Laws

Physical laws that define the interconnection relationships of nodes, branches, potentials, and flows. Kirchhoff's Laws specify a conservation of flow in and out of a node and a conservation of potential around a loop of branches.

L

LPF

Abbreviation for *low-pass filter*.

© 2000-2015 All Rights Reserved.

An electronic filter that passes low-frequency signals but attenuates (reduces the amplitude of) signals with frequencies higher than the cutoff frequency.

level

One block within a behavioral description, delimited by a pair of matching keywords such as `begin-end`, `discipline-enddiscipline`.

leaf component

A component that has no subcomponents.

M

mixed port

A port with one analog connection and one digital connection.

mixed signal

A hierarchical collection of interconnected nets that includes nets associated with both continuous and discrete disciplines.

module

A definition of the interfaces and behavior of a component.

N

nature

A named collection of attributes consisting of units, tolerances, and access function names.

NR method

Newton-Raphson method. A generalized method for solving systems of nonlinear algebraic equations by breaking them into a series of many small linear operations ideally suited for computer processing.

net

An expression, which can include registers and variables, and nets of both continuous and discrete disciplines.

node

A connection point of two or more branches in a graph. In an electrical system, and equipotential surface can be modeled as a node.

© 2000-2015 All Rights Reserved.

nondynamic expression

An expression whose derivative with respect to time is zero for every point in time.

P

PLL

Abbreviation for *phase locked loop*.

A control system that generates a signal that is related to the phase of an input signal.

parameter

A variable used to characterize the behavior of an instance of a module. Parameters are defined in the first section of a module, the module interface declarations, and can be specified each time a module is instantiated.

parameter declaration

The statement in a module definition that defines the instance parameters of the module.

port

The physical connection of an expression in an instantiating (parent) module with an expression in an instantiated (child) module. A port of an instantiated module has two nets, the upper connection, which is a net in the instantiating module, and the lower connection, which is a net in the instantiated module.

potential

One of the two fundamental quantities used to simulate the behavior of a system. In electrical systems, potential is voltage.

primitive

A basic component that is defined entirely in terms of behavior, without reference to any other primitives.

probe

A branch introduced into a circuit (or system) that does not alter the circuit's behavior, but lets the simulator read the potential or flow at that point.

R

RF

Abbreviation for *radio frequency*.

This is a specific range of an oscillating signal, usually in the 3 KHz-300 GHz range.

© 2000-2015 All Rights Reserved.

rms

Abbreviation for *root-mean-squared*.

A way to measure the average power.

reference direction

A convention for determining whether the flow through a branch, the potential across a branch, or the flow in or out of a terminal, is positive or negative.

reference node

The global node (which has a potential of zero) against which the potentials of all single nodes are measured. In an electrical system, the reference node is ground.

run-time binding (of sources)

The conditional introduction and removal of potential and flow sources during a simulation. A potential source can replace a flow source and vice versa.

S

scope

The current nesting level of a block.

seed

A number used to initialize a random number generator, or a string used to initialize a list of automatically generated names, such as for a list of pins.

signal

1. A hierarchical collection of nets that, because of port connections, are contiguous.
2. A single valued function of time, such as voltage or current in a transient simulation.

structural definitions

Instantiating modules inside other modules through the use of module definitions and declarations to create a hierarchical structure in the module's behavioral description.

source

A branch introduced between two nodes to contribute to the potential and flow of those nodes.

system

A collection of interconnected components that produces a response when acted upon by a stimulus.

© 2000-2015 All Rights Reserved.

V

VCO

Abbreviation for *Voltage Controlled Oscillator*.

An oscillator whose frequency can be controlled by a voltage input.

Verilog®-A

A language for the behavioral description of continuous-time systems that uses a syntax similar to digital Verilog.

Verilog-AMS

A mixed-signal language for the behavioral description of continuous-time and discrete-time systems that uses a syntax similar to digital Verilog.

© 2000-2015 All Rights Reserved.

© 2000-2015 All Rights Reserved.

Index

Symbols

` (accent grave) 249
`default_nodetype compiler directive 256
`define compiler directive
    syntax 250
    tested by `ifdef compiler directive 252
`ifdef compiler directive 252
`include compiler directive 253
`resetall compiler directive 258
`timescale compiler directive 254, 258
`undef compiler directive 251
^ (bitwise binary exclusive OR) 106
^~ (bitwise binary exclusive NOR) 106
_ (underscore), in identifiers 51
! (logical negation) 103
!= (not equal to) 106
- (binary minus) 105
- (unary minus) 103
? and : (conditional operator) 109
" (double quote character), displaying 187
((left parenthesis) 65
(* attributes
    cds_inherited_parameter 63
    desc 59, 60, 63, 80
    groundSensitivity 37
    inh_conn_def_value 41
    inh_conn_prop_name 41
    library_binding 135
    passed_mfactor 218
    supplySensitivity 37
(tab character), displaying 187
) (right parenthesis) 65
[(left bracket), using to include end point in range 65
] (right bracket), using to include end point in range 65
@ (at-sign) operator 116
* (multiply) 105
/ (divide) 105
/* (slash, asterisk), as comment marker 50
// (double slash), as comment marker 50
/f 485
\ (backslash)
    continuing macro text with 250
    displaying 187
    in escaped names 51
& (bitwise binary and) 106
&& (logical and) 106
% (modulo) 105
% (percent character), displaying 187
+ (binary plus) 105
+ (unary plus) 103
< (less than) 105
<+ (branch contribution operator) 90
<< (shift bits left) 107
<= (less than or equal) 105
== (logical equals) 105
> (greater than) 105
>= (greater than or equal) 105
>> (shift bits right) 107
| (bitwise binary or) 106
|| (logical or) 106
~ (bitwise unary negation) 103
~^ (bitwise binary exclusive nor) 106
$ (dollar sign), in identifiers 51
$abstime function 131
$display 189
$display task 189, 190
$dist_chi_square function 149
$dist_erlang function 151
$dist_exponential function 148
$dist_normal function 147
$dist_poisson function 148
$dist_t function 150
$dist_uniform function 146
$fclose task 199
$fdebug 197
$fdisplay 196
$fdisplay task 196, 197
$ferror 198
$fgets 195
$fmonitor 197
$fopen task 192
    special formatting commands for 193
$fseek 198
$fstrobe 196
$fstrobe task 195, 196
$ftell 198
$fwrite 197
$limexp
    analog operator 165

© 2000-2015 All Rights Reserved.

$limit function 129
$random simulator function 145
$realtime function 131
$rewind 199
$strobe 186
  description 186, 191
  example of use 188
$write 190

A

A 481
above event 120
abs function 112
absdelta function 122
absolute function 112
absolute tolerances
  used to evaluate convergence 266
absolute value 360
absolute value model 360
abstol attribute
  in convergence 266
  description 72
  requirements for 73
ac_stim simulator function 142
accent grave (`), compiler directive
    designation 249
access attribute
  description 72
  requirements for 73
access functions
  name taken from discipline 134
  syntax 133
  using in branch contribution
      statement 91
  using to obtain values 134
  using to set values 134
acos function 113
acosh function 113
ADC
  8-bit differential nonlinearity
      measurement 377
  8-bit integral nonlinearity
      measurement 378
  definition 377
ADC model
  8-bit 404
  8-bit (ideal) 405
  8-bit differential nonlinearity
      measurement 377
  8-bit integral nonlinearity
      measurement 378
adder 361
adder model 361
  four numbers 362
  full 325
  half 324
adder, 4 numbers 362
AM demodulator 424
AM demodulator model 424
AM modulator 425
AM modulator model 425
ammeter (current meter) 379
ammeter model 379
amplifier 333
amplifier model 333
  current deadband 278
  deadband differential 337
  differential 338
  limiting differential 345
  logarithmic 346
  operational 282
  sample-and-hold (ideal) 410
  variable gain differential 355
  voltage deadband 292
  voltage-controlled variable-gain 293
analog behavior, defining with control
    flow 43
analog blocks
  multiple blocks not allowed 42
  placement 42
analog components 277
analog events 115 to 124
  absdelta 122
  cross 119
  detecting 116
  detecting multiple 116
  final_step 118
  initial_step 117
  timer 124
analog multiplexer 277
analog multiplexer model 277
analog operators 164
  $limexp 165
  not allowed in for loop 96
  listed 164
  not allowed in repeat loop 95
  restrictions on 164
  using in looping constructs 97
  not allowed in while loop 96
analog systems 25

© 2000-2015 All Rights Reserved.

analog-to-digital converter
example 98
model, 8-bit 404
model, 8-bit (ideal) 405
model, 8-bit differential nonlinearity measurement 377
model, 8-bit integral nonlinearity measurement 378
analyses
detecting first time step in 117
detecting last time step in 118
analysis function 141
analysis types 141
analysis-dependent functions 138
AND gate 310
AND gate model 310
arc-cosine function 113
arc-hyperbolic cosine function 113
arc-hyperbolic sine function 113
arc-hyperbolic tangent function 113
arc-sine function 113
arc-tangent function 113
arc-tangent of x/y function 113
arrays
arguments represented as 177
as parameter values 217
assignment operator for 90
of integers, declaring 59
of parameters 65
of reals, declaring 60
of wreals, declaring 84
asin function 113
asinh function 113
assignment operator, procedural 90
assignment statement 89
assignment statement, indirect branch 92
associated reference directions 26
association order, of operators 102
atan function 113
atan2 function 113
atanh function 113
attenuator model 426
attributes
abstol 72
access 72
blowup 73
ddt_nature 72
huge 73
idt_nature 72
requirements 73
units 72
user-defined 72
using to define base nature 72
audio source 427
audio source model 427

B

B 481
backward compatibility 457
base natures
declaring 72
description 71
basic components 294
behavioral characteristics, defining with internal nodes 47
behavioral description, definition 481
behavioral model, definition 481
bidirectional ports 35
binary operators 105
binding, run-time, definition 488
bit error rate calculator model 428
bitwise operators 108
AND 108
exclusive NOR 108
exclusive OR 108
inclusive OR 108
unary negation 109
blanks, as white space 50
block comment 50
blocks
analog 42
definition 482
blowup attribute, description 73
bound_step simulator function 129
braces, meaning of in syntax 22
brackets ([ ]) 65
branch contribution statement
compared with procedural assignment statement 91
cumulative effect of 91
evaluation of 91
incompatible with indirect branch assignment 93
syntax 90
branch data type 86
branch terminals 86
branches
declaring 86
definition 482
flow, default value for 271

© 2000-2015 All Rights Reserved.

reference directions for 26
switch, creating 92
switch, defined 271
switch, equivalent circuit model for 271
values associated with 26
built-in primitives 264
buses 80

C

c or C format character 188
capacitor model 295
untrimmed 289
case construct 94
case statement 94
CDF, definition 276
cds_inherited_parameter attribute 63
channel_descriptor, returned by $fopen 192
charge meter model 390
charge pump model 429
child modules
definition 483
chi-square distribution function 149
circuit fault model
open 281
short 284
circular integrator operator
example 169
using 167
clamp model
hard current 279
hard voltage 280
soft current 285
soft voltage 286
clocked JK flip-flop model 318
closing a file 199
code generator model
2-bit 430
4-bit 431
comments 50
in modules 50
in text macros 250
comparator 334
example 172
model 334
compatibility
of disciplines 77, 76
compensator model
lag 303
lead 304
lead-lag 305
compilation, conditional 252
compiler directives
`default_nodetype 256
`define 250
`ifdef 252
`include 253, 254, 258
`resetall 258
`timescale 254, 258
`undef 251
designated by accent grave (`) 249
list of 249
resetting to default values 258
components
definition 482
conditional compilation 252
conditional operator 109
conditional statement 94
connect modules
digital islands 246
driver-receiver segregation 243
connecting instances
example 212
rules for 213
connecting the ports of module instances 211
conservative discipline 75
conservative systems 25
conservative disciplines used to define 81
defined 25
values associated with 26
constant expression 102
constant power sink model 283
constants
integer 52
real 52
string, used as parameters 217
constitutive relationships
definition 264, 482
use in nodal analysis 265
constructs
case 94
looping 97
procedural control 89
contribution statements, format 42, 90
control components 302
control flow
definition 483
describing behavior with 44

© 2000-2015 All Rights Reserved.

controlled integrator model 335
controlled sources 270
controller model
proportional 306
proportional derivative 307
proportional integral 308
proportional integral derivative 309
conventions, typographical 21
convergence 265
conversion specifications 187
converting real numbers to integers 60
core model, magnetic 356
cos function 113
cosh function 113
cosine function 113
cross event 119
cross function
syntax 119
cube model 363
cubic root model 364
current
access function 136
accessing branch current 136
accessing the current of an out-of-module port 137
flow into module through a port 136
current analysis type, determining 141
current clamp model
hard 279
soft 285
current deadband amplifier model 278
current meter model 379
current source model
current-controlled 300
voltage-controlled 299
current-controlled current source 271, 300
current-controlled current source model 300
current-controlled voltage source 270, 298
current-controlled voltage source model 298

D

d or D format character 188
DAC model
8-bit 407
8-bit (ideal) 408
8-bit differential nonlinearity measurement 380
8-bit integral nonlinearity measurement 381
DAC, definition 380
damper model 398
data types
branch 86
discipline 74
integer number 59
nature 70
parameter 62
real number 60
DC analysis
value returned by idt during 166
DC motor model 330
ddt operator (time derivative) 45, 165
ddt_nature attribute
description 72
requirements for 73
deadband amplifier model
current 278
voltage 292
deadband differential amplifier model 337
deadband model 336
decider model 432
decimal logarithm function 112
decimator model 406
declarations
definition 483
global, definition 485
.def filename extension 275
default values, required for parameters 63
`default_nodetype compiler directive 256
`define compiler directive
syntax 250
defparam statement
overriding parameter values with 215
precedence of 216
delay operator 170
delaying continuously valued waveform 170
delta probe model 382
demodulator model
8-bit PCM 440
AM 424
FM 435
PM 444
QAM 16-ary 446
QPSK 449
derivative controller model
proportional 307
proportional integral 309

© 2000-2015 All Rights Reserved.

derivative, time 165
derived nature 71
desc attribute 59, 60, 63, 80
describing a system 24
description attribute
for integers 59
for net disciplines 80
for parameter declarations 63
for reals 60
differential amplifier (opamp) 338
differential amplifier model 338
deadband 337
limiting 345
variable gain 355
differential signal driver 339
differential signal driver model 339
differentiator model 340
digital islands 246
digital phase locked loop model 433
digital to analog converter example 175
digital voltage controlled oscillator model 434
digital-to-analog converter model
8-bit 407
8-bit (ideal) 408
8-bit differential nonlinearity measurement 380
8-bit integral nonlinearity measurement 381
diode model 416
Schottky 423
direction of ports, declaring 34
directions, reference 488
directives. *See* compiler directives
disciplines 74
compatibility of 77 to 79
conservative 75
declaring 74
definition 484
empty 75
empty, declaring terminals with 81
scope of 74
signal-flow 75
discontinuities
announcing 127
in switch branches 272
discontinuity function
not required for switch branches 272
syntax 127
discrete-time finite difference approximation 265
$display task 189, 190
displaying
information 186
results 186
$dist_chi_square function 149
$dist_erlang function 151
$dist_exponential function 148
$dist_normal function 147
$dist_poisson function 148
$dist_t function 150
$dist_uniform function 146
distributions
chi-square 149
Erlang 151
exponential 148
gaussian 147
normal 147
Poisson 148
Student's T 150
uniform 146
divider model 365
DNL, definition 377
dollar signs, in identifiers 51
domain
of hyperbolic functions 113
of mathematical functions 112
of trigonometric functions 113
driver model
differential signal 339
driver_count function 139
driver_state function 139
driver_strength function 139
driver-receiver segregation 243
definition 484
drivers
definition 138
number of, determining 139
numbering system for 138
strength contribution of, determining 139
value contribution of, determining 139
D-type flip-flop model 317
dynamic expression, definition 484
dynamic parameters
declaring 68

E

E 484
e or E format character 188

© 2000-2015 All Rights Reserved.

8-bit parallel register model 328
8-bit serial register model 329
electromagnetic components 330
electromagnetic relay 331
electromagnetic relay model 331
element, definition 484
else statement, matching with if statement 94
empty disciplines
  compatibility of 77
  definition 75
  example 75
  predefined (wire) 75
endmodule keyword 29, 30
entering interactive Tcl mode 203
enumerated values, as parameter values 217
environment functions 131
Erlang distribution 151
Erlang distribution function 151
error calculation block 302
error calculation block model 302
escaped names 51
  defined 51
  using keywords as 455
event OR operator 116
events
  detecting analog 116
  detecting and using 115
events, analog 115 to 124
examples
  $strobe formatting 188
  analog-to-digital converter 98
  ideal relay 272
  ideal sampled data integrator 185
  inductor 45
  RLC circuit 47
  sources and probes 273
  voltage deadband amplifier 44
exclude keyword 65
exiting to the operating system 199
exp function 112
exponential distribution function 148
exponential function 112
exponential function model 366
exponential function, limited 165
expressions
  constant 102
  definition 102
  dynamic, definition 484
  short circuiting of 110

F

F 483
f or F format character 188
fault model
  open circuit 281
  short circuit 284
$fclose task 199
$fdisplay task 196, 197
files
  closing 199
  including at compilation time 253
  opening 192
  writing to 196
files, working with 192
filters
  slew 175
  transition 171
final_step event 118
find event probe 383
find event probe model 383
find slope 385
find slope model 385
finite-difference approximation 265
flicker_noise function 143
flicker_noise simulator function 143
flip-flop model
  clocked JK 318
  D-type 317
  JK-type 320
  RS-type 322
  toggle-type 323
  trigger-type 323
flow
  default value for 271
  definition 485
  in a conservative system 26
  probes, definition 268
  sources, definition 269
  sources, equivalent circuit model for 270
  sources, switching to potential sources 271
flow law. *See* Kirchhoff's Laws, Flow Law
flow-to-value converter model 341
FM demodulator 435
FM demodulator model 435
FM modulator model 436
$fopen task 192
for loop statement 96

© 2000-2015 All Rights Reserved.

for statement 96
formatting output 187
four-number adder model 362
four-number subtractor model 376
frequency meter model 386
frequency-phase detector model 437
$fstrobe task 195, 196
full adder model 325
full subtractor model 327
full wave rectifier model, two phase 413
functional blocks 333
functions
  access 133
  defining 203
  environment 131
  mathematical 111
  user-defined 203

G

G 485
g or G format character 188
gain block 208
gap model, magnetic 357
gaussian distribution 147
gearbox model 397
generate statement 97
generating random numbers 145
generating random numbers in specified distributions 146
genvars 70
global declarations, definition 485
ground nodes
  as assumed branch terminal 86
  potential of 26
groundSensitivity and supplySensitivity attributes 37
grouping parameter overrides 215

H

H 485
h or H format character 188
half adder model 324
half subtractor model 326
half wave rectifier model, two phase 414
hard current clamp model 279
hard voltage clamp model 280
hierarchical name, displaying 187
hierarchy level
  parameter override precedence and 216
higher order systems 48
huge attribute, description 73
hyperbolic cosine function 113
hyperbolic functions 112
hyperbolic sine function 113
hyperbolic tangent function 113
hypot function 113
hypotenuse function 113
hysteresis model, rectangular 342

I

IC analysis, value returned by idt during 166
ideal relay example 272
ideal sampled data integrator example 185
identifiers 50
idt operator
  example 46
  using in feedback configuration 167
idt_nature attribute
  description 72
  requirements for 73
idtmod operator
  example 169
  using 167
`ifdef compiler directive 252
ignored code, restrictions on 252
impedance meter model 396
implicit branches 87
implicit models 274
`include compiler directive 253
indirect branch assignment statement 92
inductor model 296
  module describing 45
  untrimmed 290
-inf (negative infinity) 65
infinity, indicating in a range 65
inh_conn_def_value attribute 41
inh_conn_prop_name attribute 41
inherited connections
  definition 41
  supply sensitivity attributes, with 41
inherited_mfactor attribute 218
initial_step event 117
  syntax 117
instances

© 2000-2015 All Rights Reserved.

connecting with ports 211, 212
creating 208
creating and naming 208
definition 485
overriding parameter values in 213
instantiating
analog primitives 215
analog primitives that use array valued parameters 217
modules that use unsupported parameter types 217
instantiation
definition 485
of non-Verilog-A modules 217
statement. *See* module instantiation statement example
syntax 208
integer
attributes for 59
constants 52
data type 59
declaring 59
numbers 52, 57
range allowed in Verilog-A 59
integral controller model, proportional 308
integral derivative controller model, proportional 309
integral, time 166
integration and differentiation with analog signal, using 45
integrator 343
integrator model 343
controlled 335
saturating 350
switched capacitor 412
interconnection relationships 264
interface declarations, example 33
internal nodes
for higher order derivatives 45
in higher order systems 48
use 47
internal nodes in behavioral definitions, using 47
internal nodes in higher order system, using 48
internal nodes in modules, using 47
interpolating with table models 151

J

JK-type flip-flop model 320

K

keywords, list of 455
Kirchhoff's Laws 264
definition 485
Flow Law 25, 264, 265, 266
illustrated 264
use in nodal analysis 265
Potential Law 25, 264

L

L 485
lag compensator model 303
Laplace transforms
numerator-denominator form 179
numerator-pole form 179
s-domain filters 176
zero-denominator form 178
zero-pole form 177
laplace_nd Laplace transform 179
laplace_np Laplace transform 179
laplace_zd Laplace transform 178
laplace_zp Laplace transform 177
last_crossing simulator function
improving accuracy of 130
setting direction for 119, 130
syntax 130
laws, Kirchhoff's. *See* Kirchhoff's Laws
lead compensator model 304
lead-lag compensator model 305
left justifying output 187
level shifter model 321, 344
level, definition 486
library_binding attribute 135
$limexp analog operator 165
limited exponential function 165
limiting differential amplifier model 345
linear conductor model 273
linear resistor model 274
ln function 112
local parameters
declaring 69
log function 112

© 2000-2015 All Rights Reserved.

logarithm function
decimal 112
natural 112
logarithmic amplifier model 346
logic components 310
logic table 320, 322, 323
LPF, definition 433

M

M 486
m factor (multiplicity factor)
example of using 218
using 218
macros. *See* text macros
magnetic components 356
magnetic core 356
magnetic core model 356
magnetic gap 357
magnetic gap model 357
magnetic winding 358
magnetic winding model 358
mapping instance ports to module ports 210
mapping ports with ordered lists 210
mass model 399
math domain errors, controlling 113
mathematical components 360
mathematical functions 112
maximum (max) function 112
measure components 377
measurement model
offset 387
slew rate 387, 392
mechanical damper 398
mechanical damper model 398
mechanical mass 399
mechanical mass model 399
mechanical restrainer 400
mechanical restrainer model 400
mechanical spring 402
mechanical spring model 402
mechanical systems 397
minimum (min) function 112
mixed conservative and signal-flow systems 26
mixed-signal components 404
mixer 438
mixer model 437, 438
models
library of samples 275
modulator model
8-bit PCM 441
AM 425
FM 436
PM 445
QPSK 450
quadrature amplitude 16-ary 448
module instantiation statement
overrides by, subordinate to defparam 216
module keyword 29
modules
analog behavior of defining 42
behavioral description 42
capacitor example 45
child, definition 483
declaring 30
definition 30, 486
format 29
hierarchy of 207
instantiating in other modules 208
instantiation statement, example 209, 212
interface declarations 33
interface, declaring 33
internal nodes in 47
name 33
using nodes in 81
non-Verilog-A 217
overview 29
RLC circuit example 47, 48
top-level 207
transformer example 208
voltage deadband amplifier example 44
MOS thin-film transistor 419
MOS thin-film transistor model 419
MOS transistor (level 1) 417
MOS transistor model (level 1) 417
motor model
DC 330
three-phase 332
multiplexer model 347
multiplier model 367

N

N 486
N JFET transistor model 420

© 2000-2015 All Rights Reserved.

name pairs
mapping instance nodes with 211
rules for, when mapping instance nodes 211
named branches 82
names, escaped 51
NAND Gate 311
NAND gate model 311
natural log function model 368
natural logarithm function 112
natures 70
access function for 72
attributes 72
base, declaring 72
base, definition 71
binding with potential and flow 74
declaring 70
definition 486
deriving from other natures 71
requirements for 71
net disciplines 80
description attribute for 80
new-line characters
as white space 50
displaying 187
Newton-Raphson method
definition 486
used to evaluate systems 265
nodal analysis 265
node data type 80
nodes 25
assumed to be infinitely small 264
connecting instances with 211
declaring 80
definition 486
identifier, used in name pair 211
instance, mapping with name pairs 211
matching sizes required when connected 213
as module ports 81
reference, definition 488
reference, potential of 26
scalar 80
values associated with 26
vector, declaring 80
vector, definition 80
ways of using 81
noise functions
flicker_noise 143
noise_table 144
noise source model 439
noise_table function 144
noise_table simulator function 144
nonlinearities, announcing and handling 129
NOR Gate 314
NOR gate model 314
normal (gaussian) distribution 147
normal distribution function 147
NOT Gate 313
NOT gate model 313
NPN bipolar junction transistor model 421
NR method, definition 486
numbers 52
numerator-denominator Laplace transforms 179
numerator-denominator Z-transforms 184
numerator-pole Laplace transforms 179
numerator-pole Z-transforms 184

O

o or O format character 188
offset measurement 387
offset measurement model 387
one-line comment 50
opamp model 282, 338
open circuit fault 281
open circuit fault model 281
opening
file 192
operational amplifier model 282
operators 101 to 109
analog 164
association of 102
binary 105
bitwise 108
circular integrator 167
delay 170
idtmod 167
precedence 110
precedence of 102, 110
ternary 109
time derivative 165
time integral 166
unary 103
or (event OR) 107
OR Gate 312
OR gate model 312
OR operator, event 116
order of evaluation, changing 102

© 2000-2015 All Rights Reserved.

ordered lists, mapping nodes with 210
ordinary identifiers 51
oscillator model
digital voltage controlled 434
voltage-controlled 453
out-of-module current access 137
overriding parameter values 213, ?? to 216
by name 214
from the instantiation statement 213
grouping override statements together 215
in instances 213
precedence rules 216
overview
analog events 115
operators 101
overview of probes and sources 268

P

P 487
parallel register model, 8-bit 328
parallel register, 8-bit 328
parameters 36, 62
aliases 69
array values as 217
arrays of 65
attributes for 63
changing during compilation 62
must be constants 62
declaration, definition 487
declaring 62
default value required 63
definition 487
dependence on other parameters 63
enumerated values as 217
names 36
overriding values with defparam statement 215
overriding values with module instantiation statement 213
permissible values for, specifying 64
string values as 217
type specifier optional 63
type, specifying 63
parentheses
changing evaluation order with 102
using to exclude end point in range 65
passed_mfactor attribute 218
PCM demodulator model, 8-bit 440
PCM demodulator, 8-bit 440
PCM modulator model, 8-bit 441
PCM modulator, 8-bit 441
pending value of a driver 138
period of signal, example of calculating 131
permissible values for parameters, specifying 64
permissible values, specifying 64
phase detector
model 442
phase locked loop model 443
digital 433
PLL model 443
digital 433
PLL, definition 435
PM demodulator 444
PM demodulator model 444
PM modulator 445
PM modulator model 445
Poisson distribution 148
Poisson distribution function 148
polynomial 369
polynomial model 369
port branches 269
monitoring flow with 268
port bus, defining 81
port connection rules 213
port declaration example 35
port direction 34
port type 34
ports 33
bidirectional 35
declaring 33
defining by listing nodes 81
direction, declaring 34
instance, mapping to defining module ports 210
names, using to connect instances 212
type of, declaring 34
undeclared types as 34
potential
definition 487
in electrical systems 26
probes 268
sources, definition 269
sources, equivalent circuit model for 270
sources, switching to flow sources 271
potential law. *See* Kirchhoff's Laws 25

© 2000-2015 All Rights Reserved.

power (pow) function 112
power consumption, specifying 190
power electronics components 413
power function model 370
power meter model 388
power sink model, constant 283
precedence of operators 102, 110
precedence rules
    for overriding parameter values 216
primitives
    definition 487
    instantiating in Verilog-A modules 216
probe model
    delta 382
    find event 383
    signal statistics 383, 385, 393
probes 268
    definition 268, 487
    flow 268
    potential 268
    reasons for using 268
procedural assignment statement 90
procedural assignment statements in the analog block 90
procedural control constructs 89
proportional controller model 306
proportional derivative controller 307
proportional derivative controller model 307
proportional integral controller model 308
proportional integral derivative controller model 309
pump model, charge 429

Q

Q (charge) meter model 390
QAM 16-ary demodulator model 446
QPSK demodulator model 449
QPSK modulator model 446, 450
QPSK, definition 446
quadrature amplitude 16-ary modulator model 448
quadrature phase shift key demodulator model 449
quadrature phase shift key modulator model 450
quantizer model 348
querying the simulation environment 131

R

R 487
random bit stream generator model 451
random numbers, generating 145
$random simulator function 145
range
    for integer numbers 59
    for real numbers 60
rate of change, controlling with slew filter 175
reading from a file 195
real constants
    scale factors for 53
    syntax 52
real numbers 52, 59
    attributes for 60
    converting to integers 60
    declaring 60
    range permitted 60
reciprocal model 371
rectangular hysteresis model 342
reference directions 26
    associated 26
    definition 488
    illustrated 26
reference nodes 26
    definition 488
    potential of 26
relative tolerance 266
relay
    example 128
    model, electromagnetic 331
reltol (relative tolerance) 266
repeat loop statement 95
repeat statement 95
repeater 349
repeater model 349
`resetall compiler directive 258
resistor model 294
    self-tuning 287
    untrimmed 291
restrainer model 400
restrictions on using analog operators 164
rise times, setting default for 258
RLC Circuit 274
RLC circuit 47, 48
RLC circuit model 274
rms, definition 379
road model 401

© 2000-2015 All Rights Reserved.

RS-Type Flip-Flop 322
RS-type flip-flop model 322
rules, for connecting instances 213
run time binding, definition 488

S

S 488
s or S format character 188
sample-and-hold amplifier model (ideal) 410
sampler model 391
saturating integrator model 350
scalar node 80
scale factors, for real constants 53
Schottky Diode 423
Schottky diode model 423
scope
  definition 488
  named block defines new 93
  of discipline identifiers 74
  rules 51
self-tuning resistor 287
self-tuning resistor model 287
semiconductor components 416
sensitivity attributes 37
sequential block statement 93
serial register model, 8-bit 329
serial register, 8-bit 329
shifter model, level 321, 344
short circuit fault 284
short circuit fault model 284
short circuiting, of expressions 110
sigma-delta converter (first-order) 409
sigma-delta converter model (first order) 409
signal driver model, differential 339
signal statistics probe 393
signal statistics probe model 383, 385, 393
signal values
  modifying with branch contribution statement 90
  obtaining and setting 134
signal values, obtaining and setting 133
signal-flow discipline 75
signal-flow systems 26
  modeling supported by Verilog-A 26
  signal-flow disciplines used to define 81
signed number 372
signed number model 372
signs, requesting in output 187
simple implicit diode 274
simple implicit diode model 274
simulating a system 265
simulation environment, querying 131
simulation time, obtaining current 131
simulator flow 27
simulator functions
  $dist_chi_square 149
  $dist_erlang 151
  $dist_exponential 148
  $dist_normal 147
  $dist_poisson 148
  $dist_t 150
  $dist_uniform 146
  $random 145
  ac_stim 142
  analysis 141
  bound_step 129
  discontinuity 127
  flicker_noise 143
  last_crossing 130
  limiting function 129
  noise_table 144
  white_noise 143
sin function 113
sine function 113
single shot model 411
sinh function 113
sink model, constant power 283
sinusoidal source
  swept, model 351
  variable frequency, model 354
sinusoidal stimulus, implementing with ac_stim 142
sinusoidal waveforms, controlling with slew filter 175
sizes, of connected terminals and nodes 213
slew filter 175
slew rate measurement model 387, 392
small-signal AC sources 142
small-signal noise sources 142
smoothing piecewise constant waveforms 171
soft current clamp model 285
soft voltage clamp model 286
source model
  audio 427
  noise 439
  swept sinusoidal 351

© 2000-2015 All Rights Reserved.

three-phase 352
variable frequency sinusoidal 354
sources 269
controlled 270
current-controlled current 271
current-controlled voltage 270
definition 268, 488
flow 269
linear conductor model 273
linear resistor model 274
potential 269
reasons for using 268
RLC circuit model 274
simple implicit diode model 274
unassigned 271
voltage-controlled current 270
voltage-controlled voltage 270
space
displaying or printing 187
white 50
special characters 187
special characters, displaying 187
Spectre
primitives, instantiating in Verilog-A modules 216
spring model 402
sqr function 112
square brackets, meaning of, in syntax 22
square model 373
square root function 112
square root model 374
standard mathematical functions 112
strength contribution of drivers, determining 139
string 61
strings, as parameter values 217
$strobe
description 186, 191
example 188
structural definitions, definition 488
structural descriptions, undeclared port types in 34
Student's T distribution 150
Student's T distribution function 150
subtractor model 375
four numbers 376
full 327
half 326
supplySensitivity and groundSensitivity attributes 37
svcvs primitive 217
swept sinusoidal source
model 351
switch 301
branch, creating 92
branches 92, 271, 272
branches, value retention for 272
model 301
switched capacitor integrator model 412
syntax
definition operator (::=) 21
typographical conventions for 21
systems
conservative 25
definition 24

T

tab characters
as white space 50
displaying 187
table model file format 154
tan function 113
tangent function 113
tanh function 113
telecommunications components 424
temperature, obtaining current ambient 132
terminals
branch 86
ternary operator 109
text macros
defining 250
restrictions on 250
undefining 251
thermal voltage, obtaining 132
third-order polynomial function model 369
three-phase
motor model 332
source model 352
thyristor model 415
time derivative operator 165
time integral operator 166
time step, bounding 129
time-points, placed by transition filter 171
timer event 124
timer function 124
`timescale compiler directive
not reset by `resetall directive 258
syntax 254, 258
toggle-type flip-flop model 323

© 2000-2015 All Rights Reserved.

tolerances
absolute 266
relative 266
transformer model, two-phase 359
transient analysis 265
transistor model
MOS (level 1) 417
MOS thin-film 419
N JFET 420
NPN bipolar junction 421
transition filter
not recommended for smoothly varying waveforms 173
syntax 171
transmission channel model 452
triangular wave source, example 127
trigger-type flip-flop model 323
trigonometric and hyperbolic functions 112
trigonometric functions 112
troubleshooting loops of rigid branches 273
two-phase transformer model 359
type specifier, optional on parameter declaration 63

U

unary operators 103
defined 103
precedence of 103
unary reduction operators 103
unassigned sources 271
`undef compiler directive 251
undefining text macros 251
underscore, in identifiers 51
uniform distribution 146
uniform distribution function 146
unit attribute
description 72
for integers 59
for parameters 63
for reals 60
requirements for 73
units (scale factors) for real numbers 53
untrimmed
capacitor model 289
inductor model 290
resistor model 291
user-defined functions 203
calling 205
declaring 203
declaring analog 203
restrictions on 204

V

V 489
value contribution of drivers, determining 139
value retention for switch branches 272
value-to-flow converter model 353
variable frequency sinusoidal source model 354
variable-gain amplifier model, voltage-controlled 293
variable-gain differential amplifier model 355
VCO model 453
VCO, definition 433
vector nodes, definition 80
vectors, arguments represented as 176
Verilog-A
definition 489
language overview 24
vertical bars, meaning of, in syntax 21
voltage
access function 136
accessing potential across a branch 136
accessing potential difference 136
voltage clamp model
hard 280
soft 286
voltage deadband amplifier 44
model 292
voltage meter model 395
voltage source model
current-controlled 298
voltage-controlled 297
voltage-controlled current source 270
voltage-controlled current source model 299
voltage-controlled oscillator
model 453
model, digital 434
voltage-controlled variable-gain amplifier model 293
voltage-controlled voltage source 270
voltage-controlled voltage source model 297

© 2000-2015 All Rights Reserved.

W

wheel 403
wheel model 403
while loop statement 96
while statement 96
white space 50
white_noise simulator function 143
winding model, magnetic 358
wire (predefined empty discipline) 75
wreal nets 83
wrealXState 84
wrealZState 84
writing to a file 196

X

XNOR Gate 316
XNOR gate model 316
XOR Gate 315
XOR gate model 315

Z

Z (impedance) meter 396
Z (impedance) meter model 396
zero crosses, detecting 119
zero-denominator Laplace transforms 178
zero-denominator Z-transforms 183
zero-pole Laplace transforms 177
zero-pole Z-transforms 182
zi_nd Z-transform filter 184
zi_np Z-transform filter 184
zi_zd Z-transform filter 183
zi_zp Z-transform filter 182
Z-transform filters 182
Z-transforms
    introduction 182
    numerator-denominator form 184
    numerator-pole form 184
    zero-denominator form 183
    zero-pole form 182

© 2000-2015 All Rights Reserved.

© 2000-2015 All Rights Reserved.