Solvent Anodize Bench

Job - # L258

Description Of Operation

Process Vessel

This vessel includes a pump and filtered recirculation loop to produce a horizontal style flow path between the anode and cathode substrates. The recirculation pump is located in the lower storage compartment of the bench and is activated via a selector switch located on the front control panel. The pneumatically operated pump requires constant lubrication of the air motor. Please refer to the pump owners manual supplied for maintenance procedures and lubrication requirements. The filter housing is located at the rear of the process vessel and includes a manually operated vent valve.

This process vessel is manually filled with chemistry. The process vessel is drained to a waste container located in the lower storage compartment of the unit. The vessel should only be filled to the required level to wet the anode and cathode substrates. This will minimize the amount of waste container change outs during the drain process. The vessel is manually drained via a deadman style selector switch located on the front control panel.

The waste vessel is equipped with a custom fitted cap and also a vent cap. The vent cap should be removed during the drain process. Installed in the custom cap is a quick disconnect type fitting for the acid waste drain tube and a compression type fitting for a liquid level detection tube. The liquid level detection tube activates a pneumatically operated visual indicator located directly above the drain switch when the waste vessel is full. During the drain process the recirculation pump should be off and the filter housing purge valve should be opened. The pump can be bump started to minimize the amount of process liquid left in the system during the drain process.

Also included with the unit is (1) Nitrogen Spray Gun for operator convenience.

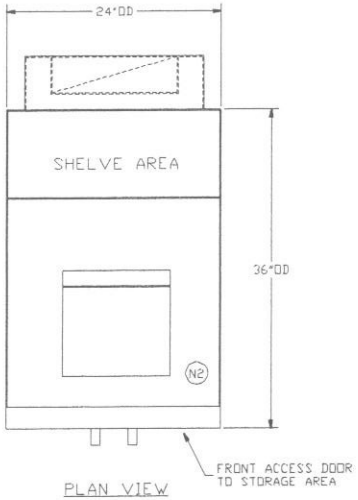

PLAN VIEW

NOTES:

1. MATERIAL OF CONSTRUCTION: STAINLESS STEEL
2. WASTE CONTAINMENT VESSEL IS LOCATED IN STORAGE AREA
3. PUMP IS LOCATED IN STORAGE AREA
4. TOOL HAS S/S ACCESS DOORS TO STORAGE AREA
5. TANK HAS RIM EXHAUST
6. TOOL HAS CASTERS AND LEVELING PADS AS REQUIRED

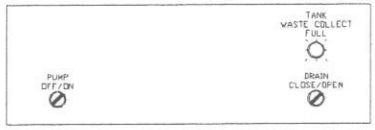

CONTROL PANEL DETAIL
(ENLARGED VIEW)

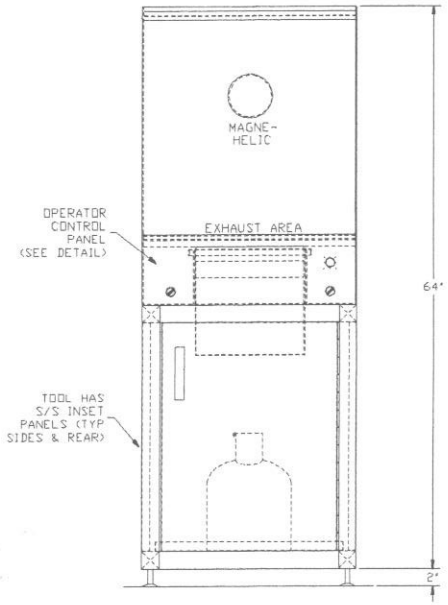

FRONT ELEVATION

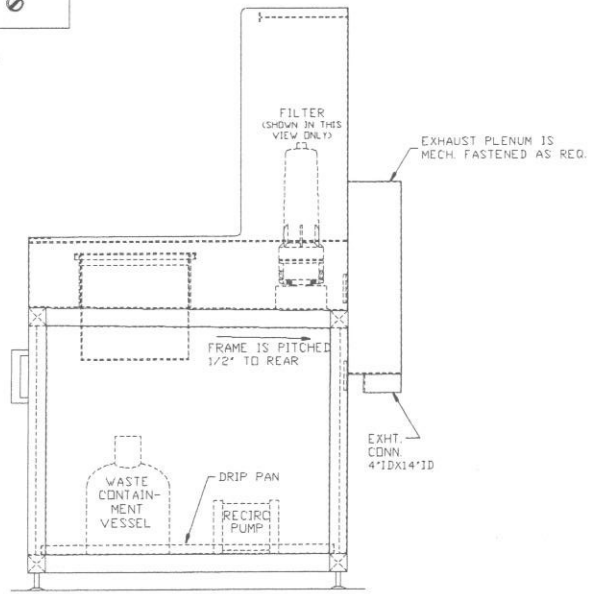

SIDE ELEVATION

REYNOLDSTECH

6895 KINNE STREET, EAST SYRACUSE, NEW YORK 13057 USA
(315)437-0532 (PHONE) (315)437-1390 (FAX)

This document is the property of ReynoldsTech Fabricators INC. and is loaned only upon condition that it is not to be copied or reproduced, nor to be used for furnishing information to others for any purpose detrimental to the interest of ReynoldsTech Fabricators INC.

REV NO	DESCRIPTION	DR BY	DATE
1	AS BUILT	GVA	02/17/00

LUCENT TECHNOLOGIES

SOVLENT ANODIZE BENCH

TOOL CONSTRUCTION

DR. BY GVA	SCALE NONE	SHEET	DWG. NO.	REV
DATE 7/30/99	JOB NO. L258		L258TL01	1

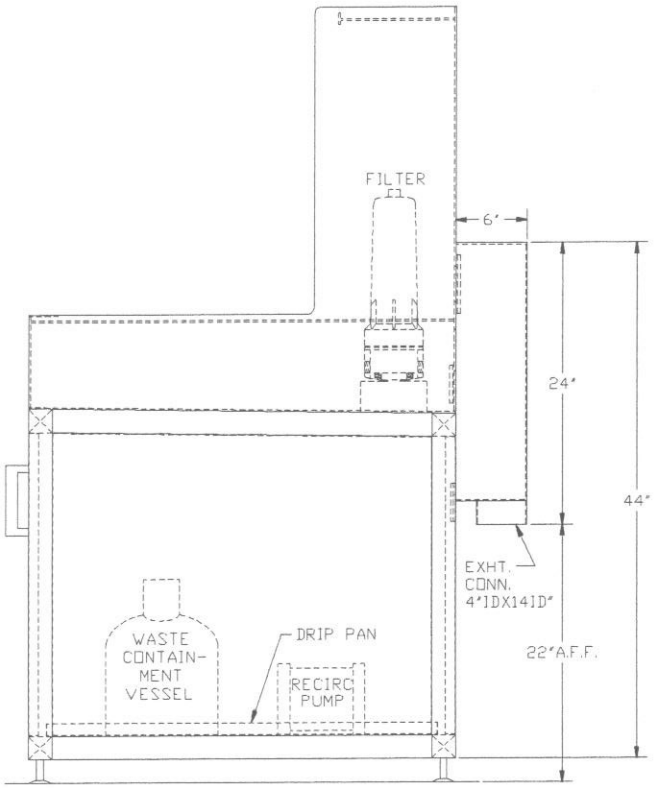

SIDE ELEVATION

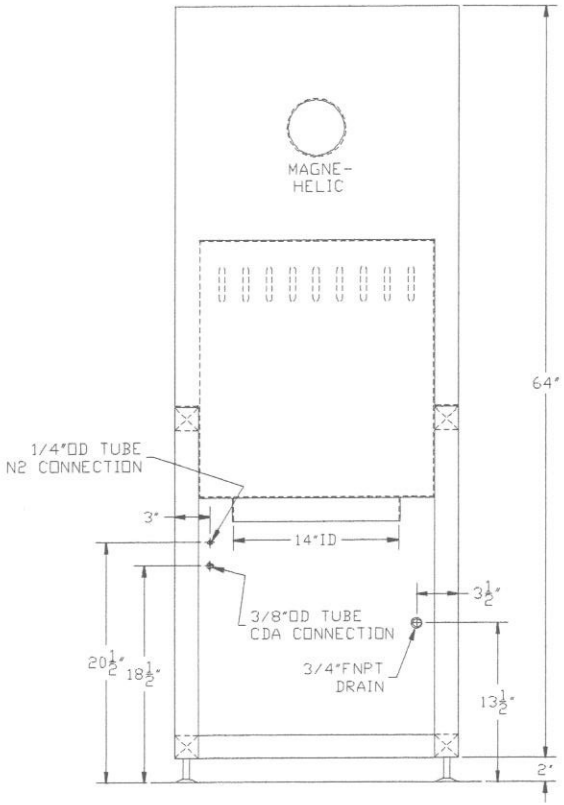

REAR ELEVATION

NOTES:

1. MATERIAL OF CONSTRUCTION: STAINLESS STEEL

REYNOLDSTECH

6895 KINNE STREET, EAST SYRACUSE, NEW YORK 13057 USA

(315)437-0532 (PHONE) (315)437-1390 (FAX)

This document is the property of ReynoldsTech Fabricators INC. and is loaned only upon condition that it is not to be copied or reproduced, nor to be used for furnishing information to others for any purpose detrimental to the interest of ReynoldsTech Fabricators INC.

REV NO	DESCRIPTION	DR BY	DATE
1	AS BUILT	GVA	02/17/00

LUCENT TECHNOLOGIES

SOLVENT ANODIZE BENCH

FACILITY CONNECTION LOCATIONS

DR. BY GVA	SCALE NONE	SHEET	DWG. NO.	REV
DATE 7/30/99	JOB NO. L258		L258F D02	0

FACILITY CONNECTION TABLE

SERVICE DESCRIPTION:	SIZE:	CAPACITY:	MATERIAL:	PRESSURE RATING:	COMMENTS:
EXHAUST	4"ID X 14"ID	750 CFM	S/S	0.75"wg	PRESSURE DROP FOR BENCH 0.50"wg
NITROGEN SUPPLY	1/4"OD TUBE	1 SCFM	S/S	80 PSI (MIN)	N/A
CDA SUPPLY	3/8"OD TUBE	10 SCFM	S/S	100 PSI (MIN)	N/A
WASTE DRAIN	3/4"FNPT	1 GPM	CPVC	ATMOSPHERIC	N/A

REYNOLDSTECH

6895 KINNE STREET, EAST SYRACUSE, NEW YORK 13057 USA

(315)437-0532 (PHONE) (315)437-1390 (FAX)

www.REYNOLDSTECH.com rtf@dreamscape.com(email)

This document is the property of ReynoldsTech INC. and is loaned only upon condition that it is not to be copied or reproduced nor to be used for furnishing information to others for any purpose detrimental to the interest of ReynoldsTech INC.

REV NO	DESCRIPTION	DR BY	DATE
1	AS BUILT	GVA	02/17/00

LUCENT TECHNOLOGIES

SOLVENT ANODIZE BENCH

FACILITY CONNECTION TABLE

DR. BY GVA	SCALE NONE	SHEET	DWG. NO.	REV
DATE 07/30/99	JOB NO. L258		L258FD01	0

ReynoldsTECH

Bill Of Materials
Spare Parts Recommendation

Date: 2-18-00

Job Name: Lucent Technologies

Job No L258

DWG REF	GEN NAME	DESCRIPTION	MFG	MFG PART #	QTY	SPR	VENDOR	PHONE #
CB1	Carboy	Carboy - HDPE Waste Vessel	Dynalon Products	405624 / 43005T3	1	2	McMaster Carr	732-329-3200
DC1A	Disconnect	Quick Disconnect Fitting Body	Colder Products	CQHD06100106	1	1	Component Supply	315-524-0091
DC1B	Disconnect	Quick Disconnect Fitting Insert	Colder Products	CQHD06200206	1	1	Component Supply	315-524-0091
F1	Filter Housing	Stainless Steel Filter Housing	Filterite	IDO10S3/4	1		US Filter	315-454-3131
FM1	Flow Meter	Flow Meter .01-1 SCFH	Dwyer	RMA-2-SSV	1	1	Dwyer Instruments	219-879-8000
AWK1	Indicator	Air Operated Rotowink Indicator - Red	Norgren	5VS-201-000	1	1	HI-Tech	315-478-3189
EM1	Magnahelic	Magnahelic Exhaust Monitior	Dwyer	2002	1		Dwyer Instruments	219-879-8000
MUF1	Muffler	Pneumatic Exhaust Muffler	Wilkerson	F23-04-000	1		Ralph W. Earl	315-454-4431
P1	Pump	Pneumatically Operated Centrifugal Pump	March	AC-5C-MD-AM	1	1	Tri State	732-223-3222
REG2	Regulator	Pressure Regulator 5-125 PSI W/Gauge	Wilkerson	R00-02-G00	1	1	Ralph W. Earl	315-454-4431
REG1	Regulator	Pressure Regulator 3-30 PSI W/Gauge	Wilkerson	R05-02-G00	1	1	Ralph W. Earl	315-454-4431
Lub 1	Regulator	Compressed Air Lubricator	Wilkerson	GRP-95-147	1	1	Ralph W. Earl	315-454-4431
AMP1	Relay	Pneumatic Logic Amplifier Relay	Telemechanique	PRD-A12	1	1	HI-Tech	315-478-3189
SG1	Spray Gun	Teflon Nitrogen Spray Gun	Fluoroware	421-42-31	1		Burns Bros.	315-422-0261
PSW1	Switch	Switch Selector Black 2-Pos. Maintained	Telemechanique	ZB2-BD2	1	1	HI-Tech	315-478-3189
PSW2	Switch	Switch Selector Black 2-Pos. Spring Return	Telemechanique	ZB2-BD4	1	1	HI-Tech	315-478-3189
PSW1-4	Switch	Pneumatic Switch Body NNP	Telemechanique	PXB-1911	1	1	HI-Tech	315-478-3189
AOV 1	Valve	Teflon Diaphragm Valve 1/2" NPT N.C.	Fluoroware	202-57	1	1	Burns Bros.	315-422-0261
VC1	Valve	Teflon StopcockValve 1/4" NPT x 1/4" Tube	Fluoroware	PVA4T42FN1	1		Burns Bros.	315-422-0261
AOV2	Valve	Pneumatically Operated Solenoid Valve	MAC	55B-11-RA	1	1	Ralph W. Earl	315-454-4431