UNIPOLE & MULTIPOLE CONNECTORS

LEMO®

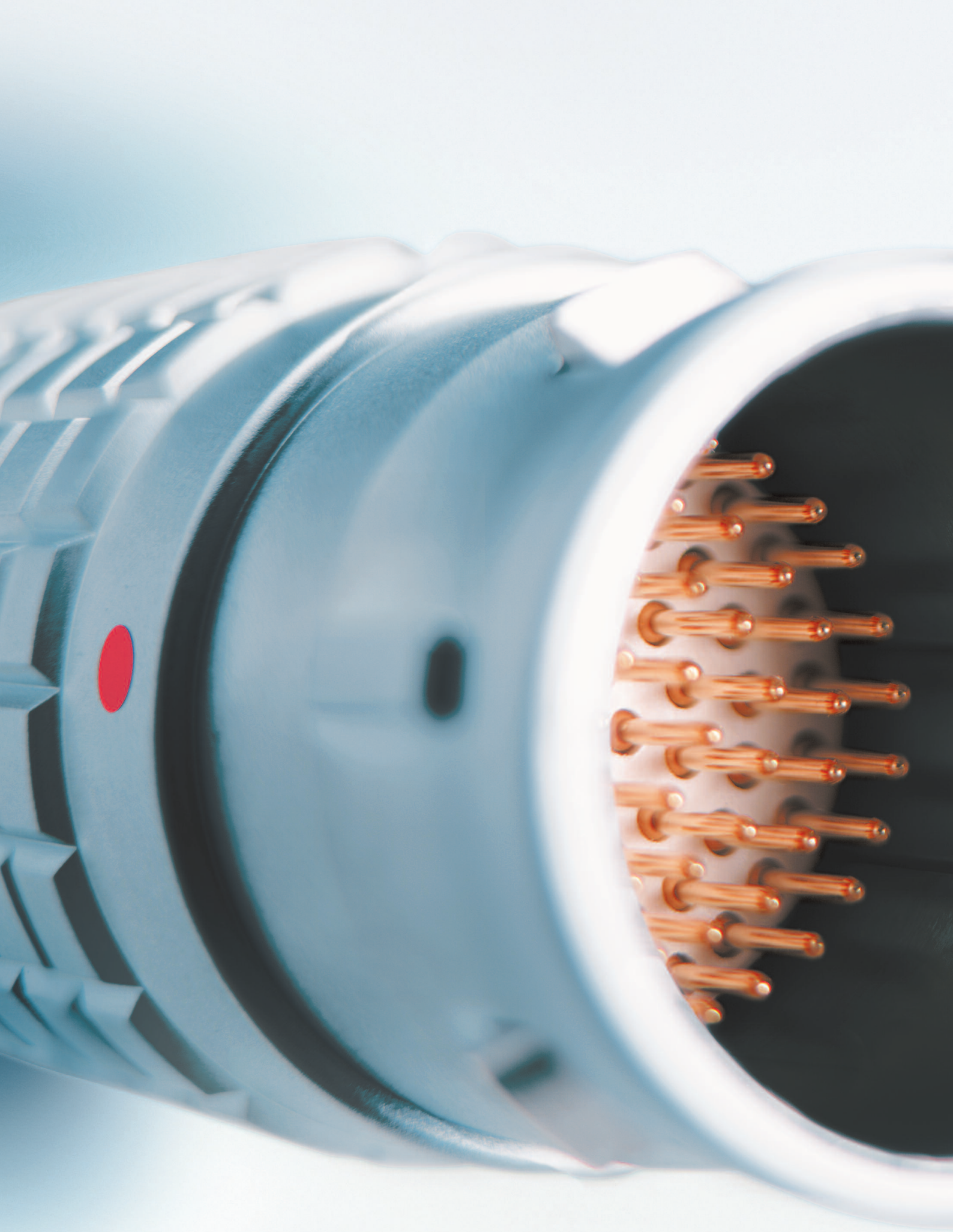

No reproduction or use without express permission of editorial or pictorial content, in any manner.
LEMO reserve the right at all times to modify and improve specifications without any notification.

LEMO unipole and multipole connectors

This catalogue gives the complete description of LEMO unipole and multipole type connectors. The LEMO manufacturing programme has been extended to almost 40 series divided into 7 product families with specific mating and environmental characteristics. Each series includes a wide variety of plug, socket, coupler and bridge plug models, available in contact configurations adapted to all round cables, including up to 114 conductors, and a maximum diameter of 30 mm. Watertight and vacuumtight models are also available. Since LEMO connectors are perfectly screened and designed to guarantee very low resistance to shell electrical continuity, they are particularly adapted to applications where electromagnetic compatibility (EMC) is important.

Table of Contents

3 steps to select the right connector ... 3

B Series (indoor, keyed)
- Interconnections ... 12
- Part Numbering system ... 13
- Metal Housing models ... 14
- Elbow socket models ... 25
- Plastic housing models ... 28
- Watertight or vacuumtight models ... 30
- Bridge models ... 34
- Threaded-latching models ... 35
- Alignment Key and Polarized Keying System ... 36

K Series (outdoor, keyed)
- Interconnections ... 37
- Part Numbering system ... 38
- Metal Housing models ... 39
- Watertight or vacuumtight models ... 47
- Alignment Key and Polarized Keying System ... 49

T Series (outdoor, keyed)
- Interconnections ... 50
- Part Numbering system ... 51
- Metal Housing models ... 52
- Watertight or vacuumtight models ... 55
- Plastic housing models ... 56

B, K and T Series Insert configuration, Housings, Insulators, Contacts, Collets, Variant ... 57

S Series (indoor, stepped insert)
- Interconnections ... 74
- Part Numbering system ... 75
- Metal Housing models ... 76
- Elbow socket models ... 87
- Plastic housing models ... 89
- Watertight or vacuumtight models ... 91

E Series (outdoor, stepped insert)
- Interconnections ... 93
- Part Numbering system ... 94
- Metal Housing models ... 95
- Watertight or vacuumtight models ... 101

S, and E Series Insert configuration, Housings, Insulators, Contacts, Collets, Variant ... 103

M Series (outdoor, keyed) ... 123

F Series (outdoor, keyed) ... 125

Spare parts ... 127

Accessories ... 137

Tooling ... 151

Panel cut-outs and PCB drilling pattern ... 157

Cable assembly (B, K, T, S and E series) ... 169

Technical characteristics ... 182

Product safety notice ... 198

Precision modular connectors to suit your application

Since its creation in Switzerland in 1946 the LEMO Group has been recognized as a global leader of circular Push-Pull connectors and connector solutions. Today LEMO and its affiliated companies, REDEL and COELVER, are active in more than 80 countries with the help of over 40 subsidiaries and distributors.

Over 75000 connectors

The modular design of the LEMO range provides over 75000 connectors from miniature ø 3 mm to ø 50 mm, capable of handling cable diameters up to 30 mm and for up to 114 contacts. This vast portfolio enables you to select the ideal connector configuration to suit almost any specific requirement in most markets, including medical devices, test and measurement instruments, machinery, audio video broadcast, telecommunications and military.

LEMO's Push-Pull Self-Latching Connection System

This self-latching system is renowned worldwide for its easy and quick mating and unmating features. It provides absolute security against vibration, shock or pull on the cable, and facilitates operation in a very limited space.

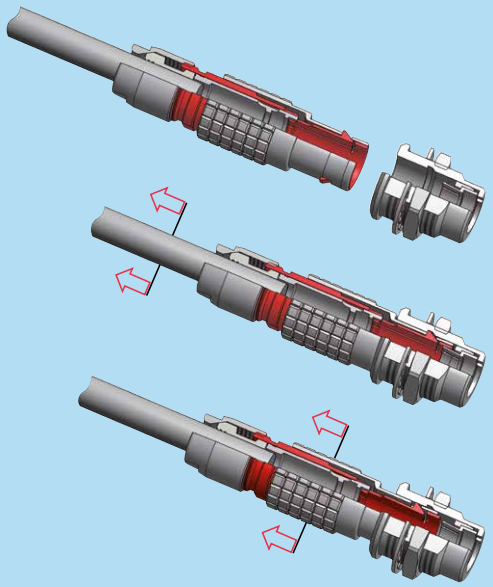

The LEMO self-latching system allows the connector to be mated by simply pushing the plug axially into the socket.

Once firmly latched, connection cannot be broken by pulling on the cable or any other component part other than the outer release sleeve.

When required, the connector is disengaged by a single axial pull on the outer release sleeve.
This first disengages the latches and then withdraws the plug from the socket.

UL Recognition

LEMO connectors are recognized by the Underwriters Laboratories (UL). The approval of the complete system (LEMO connector, cable and your equipment) will be easier because LEMO connectors are recognized.

CE marking CE

CE marking CE means that the appliance or equipment bearing it complies with the protection requirements of one or several European safety directives. CE marking CE applies to complete products or equipment, **but not to electromechanical components, such as connectors**.

RoHS

LEMO connector specifications conforms the requirements of the RoHS directive (2011/65/EU) of the European Parliament and the latest amendments. This directive specifies the restrictions of the use of hazardous substances in electrical and electronic equipment marketed in Europe.

Product safety notice & disclaimers

Please read and follow all instructions specified on the last page or on our website carefully and consult all relevent national and international safety regulations for your application. Improper handling, cable assembly, or wrong use of connectors can result in hazardous situations.

LEMO products and services are provided "as is." LEMO makes no warranties or representations with regard to LEMO product & services or use of them, express, implied or statutory, including for accuracy, completeness, or security.

In no event shall LEMO be liable for any direct, indirect, punitive, incidental, special consequential damages, to property or life, whatsoever arising out of or connected with the use or misuse of LEMO's products.

3 steps to select the right connector

Step 1: Select connector series

Select the appropriate LEMO connector series according to the environmental parameters that will affect your device or cable such as indoor, outdoor, temperature range, ingress protection of the mated connector and of your device. Use the table shown on page 4.

Part number coding

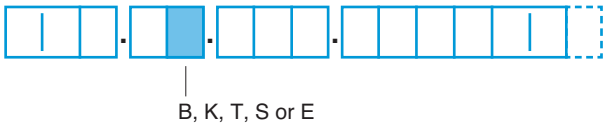

Step 2: Select connector size

Use the section (mm²) or the AWG of your cable wire to select the optimal contact diameter (values vary between solder, crimp or print contact), see page 8.

Use this optimal contact diameter to determine the right connector size as well as the insert configuration, see page 6.

Part number coding

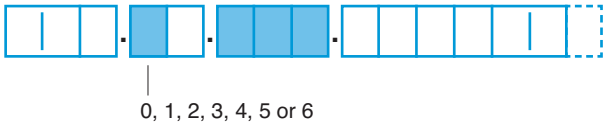

Step 3: Complete the part number

Now that you know the series, as well as the insulator configuration, complete the part numbering system with the help of the following table.

Part number coding

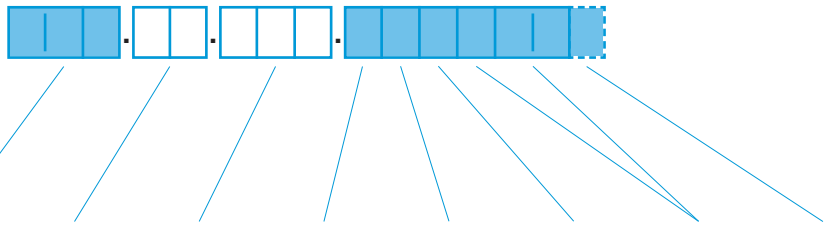

	Model	Series	Insert configuration	Housing material	Insulator material	Contact	Collet	Variant
B Series (indoor, keyed)	14	14	57	64	64	64	67	71
K Series (outdoor, keyed)	39	39	57	64	64	64	68	71
T Series (outdoor, keyed)	53	53	57	64	64	64	70	71
S Series (indoor, stepped insert)	76	76	103	112	112	112	115	121
E Series (outdoor, stepped insert)	95	95	103	112	112	112	119	121

Note: Figures in the above table refer to the catalogue pages.

Step 1: Select Connector Series

LEMO unipole and multipole connectors

The standard keyed Series (B, 00)
The characteristic feature of these connector series is a keying system which allows higher contact density and prevents all errors in alignment. The various keying alternatives prevent unwanted cross mating of otherwise similar connectors. It is also possible to use crimp contacts to reduce cable assembly time. These connector series, include the 0B to 5B range as well as the 00 multipole, some vacuumtight models are also available.

The watertight keyed Series (K, T)
These series are watertight when mated and assembled to an appropriate cable. They include the 0K to 5K series and the TT to 3T series, available in the same types as the 0B to 5B series.

The standard Series (S, 00)
The characteristic feature of these connector series is the hermaphroditic insulator in the multipole version. They include principally the 0S to 6S series, as well as the 00 unipole series.

The watertight Series (E)
These series are watertight when mated and assembled to an appropriate cable. They include the 0E to 6E series and are available in the same types as the S series.

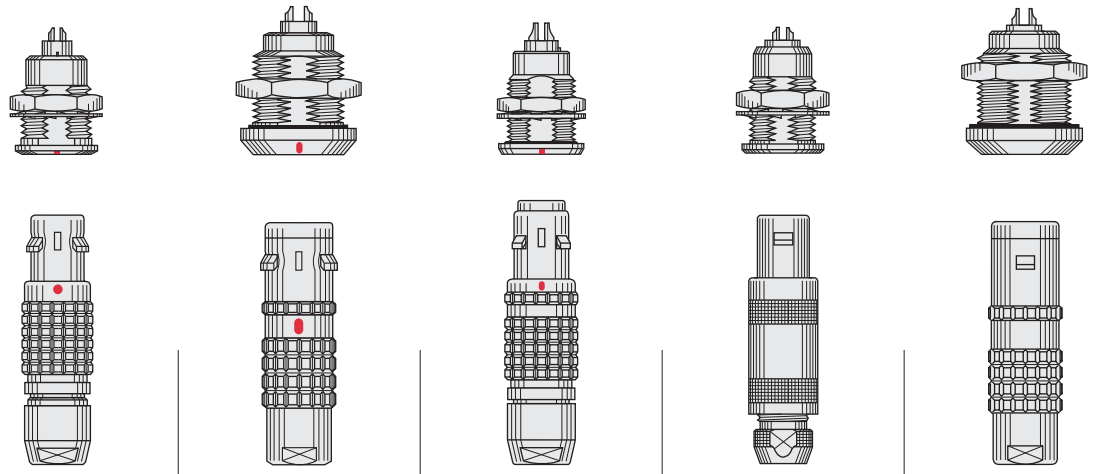

Series	00 multipole B	K	T	00 unipole S	E
Environment	indoor	outdoor or harsh environment		indoor	outdoor or harsh environment
Ingress protection [1]	IP50	IP66 to IP68		IP50	IP66 to IP68
Ingress protection [2]	IP50 to IP68 vacuumtight	IP66 to IP68 vacuumtight		IP50 to IP68 vacuumtight	IP66 to IP68 vacuumtight
Temperature range	- 55 to 250°C	- 55 to 200°C		- 55 to 250°C	- 55 to 200°C
Latching	Push-Pull self-latching				
Shell sizes	8 metal and 4 plastic	6 metal	5 metal	7 metal and 5 plastic	6 metal
Insulator type	Multipole			Unipole or multipole hermaphroditic	
Contact type	Solder, crimp or print			Solder, crimp or print	
Features	13 keyways	9 keyways	4 keyways	Stepped insert	
Page	11 to 36	37 to 50	51 to 56	73 to 92	93 to 102

Note:
[1] Mated connector. See ingress protection code p. 5. [2] Your device. For selection of connectors for watertight and vacuumtight devices, see p. 5.

Definition of Ingress Protection (IP code)

IEC 60529 outlines an international classification system for the sealing effectiveness of enclosures of electrical equipment against the intrusion into the equipment of foreign bodies (i.e. tools, dust, fingers) and moisture. This classification system utilizes the letters «IP» (Ingress Protection) followed by two digits.

Example: IP 50 = IP 5 0

IP letter code
1st digit
2nd digit

Degrees of protection - First digit

The first digit of the IP code indicates the degree to which persons are protected against contact with moving parts and the degree that equipment is protected against solid foreign bodies intruding into an enclosure.

Code	First digit description
0	No special protection
1	Protection from a large part of the body such as hand or from solid objects greater than 50 mm in diameter
2	Protection against objects not greater than 80 mm in length and 12 mm in diameter
3	Protection from entry by tools, wires, etc., with a diameter or thickness greater than 2.5 mm
4	Protection from entry by solid objects with a diameter or thickness greater than 1.0 mm
5	Protection from the amount of dust that would interfere with the operation of the equipment
6	Dust-tight
7	–
8	–

Degrees of protection - Second digit

The second digit indicates the degree of protection of the equipment inside the enclosure against the harmful entry of various forms of moisture (e.g. dripping, spraying, submersion, etc.)

Code	Second digit description
0	No special protection
1	Protection from vertically dripping water
2	Protection from dripping water when tilted up to 15°
3	Protection from sprayed water
4	Protection from splashed water
5	Protection from water projected from a nozzle
6	Protection against heavy seas, or powerful jets of water
7	Protection against temporary immersion
8	Protection against complete continuous submersion in water

Selection of connectors for watertight or vacuumtight devices

LEMO B and S series are rated IP50 only when mated. LEMO E, K and T series are rated IP66 (and over) only when mated. If a device must be watertight or vacuumtight when the connectors are unmated, it is important to select a watertight or vacuumtight socket. You can consider the following two situations:

A) Figure 1 shows a typical outdoor device. To ensure this device retains IP66 or above when connectors are unmated, it is important to choose a watertight socket from B, S, E, K or T series.

B) Figure 2 shows a device which is subjected to pressure difference such as a near vacuum or pressurized gas and must exhibit no leakage. To ensure the device maintains its sealing, the socket is additionally tested for helium leakage (according MIL 1344A).

Fig. 1

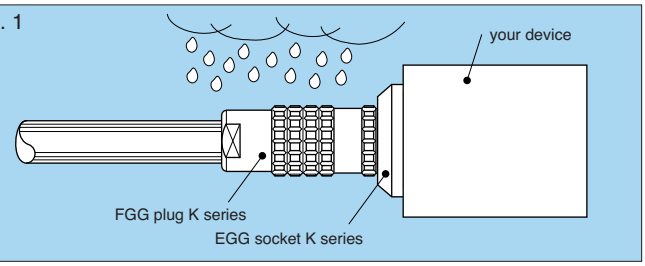

Fig. 2

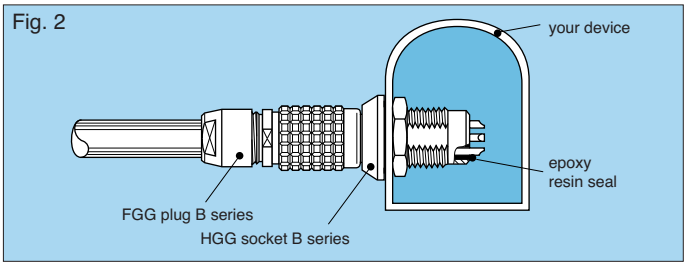

Check temperature range (see section on pages 30, 47, 55, 91 and 101).

Step 2: Select Connector Size

Select the right connector size and insert configuration

To be able to select the right connector size (0 to 6), it is important to define the contact diameter (ø A).
Find out the available contact diameter (ø A) of the LEMO connector depending on the number of contacts required and depending on the rating required (see pages 57 to 63 and 103 to 111).
The following table shows the contact diameter (ø A).

	Number of contacts	Insert configuration	Series															
			00-TT	0B-0K-0T	1B-1K-1T	XB	2B-2K-2T	3B-3K-3T	4B-4K	5B-5K	00	0S-0E	1S-1E	2S-2E	3S-3E	4S-4E	5S-5E	6S-6E
Unipole	1	**113**									1.3							
	1	**116**										1.6						
	1	**120**											2.0					
	1	**130**											3.0	3.0				
	1	**140**												4.0	4.0	4.0		
	1	**160**													6.0	6.0		
	1	**112**															12.0	
Multipole	2	**302**	0.5	0.9	1.3		2.0	3.0		6.0		0.9	1.3	1.6	2.0	4.0	6.0	
	3	**303**	0.5	0.9	1.3		1.6	2.0				0.7	0.9	1.3	2.0	3.0	6.0/4.0	6.0
	4	**304**	0.5	0.7	0.9		1.3	2.0	3.0	4.0		0.7	0.9	1.3	2.0	3.0	4.0	8.0
	5	**305**	0.35	0.7	0.9		1.3	1.6					0.9/0.7	1.3	2.0/1.3	3.0/2.0	4.0/3.0	
	6	**306**	0.35	0.5	0.7		1.3	1.6	2.0				0.7	1.3	1.3	2.0	3.0	
	7	**307**		0.5	0.7		1.3	1.6	2.0					1.3/0.9	1.3	2.0/1.3		
	8	**308**			0.7		0.9	1.3						0.9	1.3	1.3	3.0	
	9	**309**		0.5				1.3/2.0								1.3		
	10	**310**			0.5		0.9	1.3	1.6	3.0				0.9	1.3	1.3	2.0	
	12	**312**		0.35		0.7	0.7	0.9	1.3						0.9	1.3	2.0	4.0/5.0
	13	**313**													0.9	1.3		
	14	**314**			0.5		0.7	0.9		2.0					0.9	1.3	3.0/2.0	
	16	**316**			0.5		0.7	0.9	0.9	2.0					0.9	0.9	2.0	3.0
	18	**318**					0.7	0.9							0.9	0.9	3.0/1.6	4.0
	19	**319**					0.7											
	20	**320**						0.7	0.9	1.6						0.9	1.6	3.0
	22	**322**				0.5		0.7								0.9	3.0/1.6	
	24	**324**						0.7	0.9								0.9	1.6
	26	**326**					0.5	0.7										

	Number of contacts	Insert configuration	Series															
											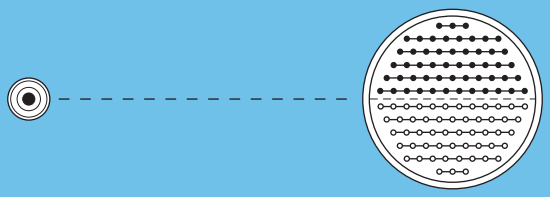							
			00-TT	0B-0K-0T	1B-1K-1T	XB	2B-2K-2T	3B-3K-3T	4B-4K	5B-5K	00	0S-0E	1S-1E	2S-2E	3S-3E	4S-4E	5S-5E	6S-6E
Multipole	30	**330**						0.7	0.9	1.3							1.3	2.0
	32	**332**					0.5											2.0
	36	**336**															1.3	2.0[1)]
	40	**340**							0.7	1.3							1.3	2.0
	44	**344**															1.3	
	48	**348**							0.7	1.3							1.3	2.0
	50	**350**								0.9								
	54	**354**								0.9								
	60	**360**																1.6
	62	**362**																1.6
	64	**364**								0.9								1.3
	72	**372**																1.3
	106	**106**																0.9

Note: [1)] 2.0 is for 6S series, for 6E the values are 1.3 and 5.0.

Verify the fitting to your wire

Verify if the selected contact diameter (ø A) of the LEMO connector fits to your cable wire diameter (AWG number or max. available section).

Contact type	Contact			Conductor						F_r [1] (N)	Notes
				Solid		Stranded					
						AWG		Section (mm²)			
	ø A (mm)	ø C (mm)	Form per fig.	AWG max.	Section max. (mm²)	min.	max.	min.	max.		
Solder	0.35	0.40	–	28	0.09	–	30	–	0.05	–	●
	0.5[2]	0.40[2]	–	28	0.09	–	30	–	0.05	–	
	0.5	0.45[7]	–	28	0.09	–	28	–	0.09	–	
	0.7[3]	0.60[3]	–	24	0.25	–	26	–	0.14	–	
	0.7	0.80	–	22	0.34	–	22[4]	–	0.34	–	
	0.9	0.80[6]	–	22[6]	0.34[6]	–	22[4][6]	–	0.34[6]	–	
	1.3	1.00	–	20	0.50	–	20[4]	–	0.50	–	
	1.6	1.40	–	16	1.00	–	18	–	1.00	–	
	2.0	1.80	–	14	1.50	–	16	–	1.50	–	
	3.0	2.70	–	10	4.00	–	12	–	4.00	–	
	4.0	3.70	–	10	6.00	–	10	–	6.00	–	
	5.0	5.20	–	–	–	–	8	–	10.00	–	
	6.0	5.20	–	–	–	–	8	–	10.00	–	
	8.0	7.00	–	–	–	–	4	–	21.00	–	
	12.0	11.50	–	–	–	–	0	–	50.00	–	
Crimp	0.5[5]	0.45	1	–	–	32	28	0.035	0.09	12	●
fig. 1	0.7	0.80	1	–	–	26	22[4]	0.140	0.34	22	●
	0.7	0.45	2	–	–	32	28	0.035	0.09	22	○
	0.9	1.10	1	–	–	24	20	0.250	0.50	30	●
	0.9	0.80	2	–	–	26	22[4]	0.140	0.34	30	○
	0.9	0.45	2	–	–	32	28	0.035	0.09	30	○
	1.3	1.40	1	–	–	20	18	0.500	1.00	40	●
	1.3	1.10	2	–	–	24	20	0.250	0.50	40	○
	1.3	0.80	2	–	–	26	22[4]	0.140	0.34	40	○
fig. 2	1.6	1.90	1	–	–	18	14[4]	1.000	1.50	50	●
	1.6	1.40	2	–	–	22	18	0.340	1.00	50	○
	2.0	2.40	1	–	–	16	12[4]	1.500	2.50	65	●
	2.0	1.90	2	–	–	18	14	1.000	1.50	65	○
	3.0	3.20	1	–	–	14	10[4]	2.500	4.00	75	●
	4.0	4.00	1	–	–	12	10	4.000	6.00	90	●

Note:
[1] contact retention force in the insulator (according to IEC 60512-8 test 15 a).
[2] for 00/TT multipole series.
[3] for S, E series.
[4] for a given AWG, the diameter of some stranded conductor designs is larger than the solder cup diameter. Make sure that the maximum conductor diameter is smaller than ø C.
[5] for 00 /TT multipole series or for 0B/0T and 1B/1T series with male contacts.
[6] for 0B.302/0B.303, 0K.302/0K.303 and 0T.302/0T.303 ø C = 1.0 mm, AWG max 20, section max (mm²) 0.50.
[7] for 00/TT and 1B/1K/1T series, according to manufacturing and plating tolerance ø C min = 0.43 mm.

● First choice alternative ○ Special order alternative

Verify the fitting to your wire

Verify if the selected contact diameter (ø A) of the LEMO connector fits to your cable wire diameter (AWG number or max. available section).

Contact type	Contact			Conductor						F_r [1] (N)	Notes
				Solid		Stranded					
	ø A (mm)	ø C (mm)	Form per fig.	AWG max.	Section max. (mm²)	AWG min.	AWG max.	Section (mm²) min.	Section (mm²) max.		
Print 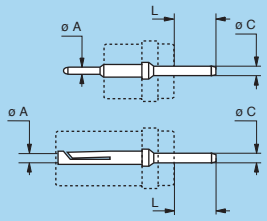	L dimensions and C are detailed in the section on PCB drilling pattern. See page 163 and 167.										●
Print (elbow) 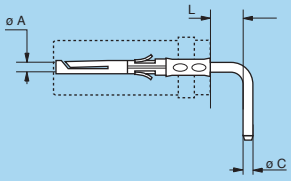	L dimensions and C are detailed in the section on PCB drilling pattern. See page 164 and 168.										●

Note: [1] contact retention force in the insulator (according to IEC 60512-8 test 15 a).

Verify the fitting to your cable

Verify if the selected connector size fits to your cable diameter.

Series	Cable diameter range (mm)			
	Collet		Collet for fitting a bend relief	
	min.	max.	min.	max.
00[1]	1.4	3.5	1.4	3.5
0B	1.4	5.6	1.4	5.2
1B	2.2	7.6	2.2	7.2
XB	4.4	8.0	4.4	7.0
2B	1.4	9.9	1.4	9.2
3B	4.2	11.9	4.2	11.0
4B	4.9	16.0	4.9	15.0
5B	9.6	25.0	9.6	15.5
0K	1.0	5.0	1.0	5.0
1K	1.3	8.5[3]	1.3	8.5[3]
2K	1.3	10.5[3]	1.3	10.5[3]
3K	2.6	15.0[3]	2.6	15.0[3]
4K	4.6	23.5[3]	4.6	15.0
5K	9.6	23.5	–	–

Series	Cable diameter range (mm)			
	Collet		Collet for fitting a bend relief	
	min.	max.	min.	max.
TT	2.4	3.0	2.4	3.0
0T	1.0	6.5[3]	1.0	6.5[3]
1T	1.3	8.5[3]	1.3	8.5[3]
2T	1.3	10.5[3]	1.3	10.5[3]
3T	2.6	15.0[3]	2.6	15.0[3]
00[2]	1.3	4.4	1.3	4.4
0S	1.3	6.2[3]	1.3	6.2[3]
1S	1.4	8.7[3]	1.4	8.7[3]
2S	1.3	10.5[3]	1.3	10.5[3]
3S	2.6	13.0[3]	2.6	13.0[3]
4S	4.1	22.0[3]	4.1	13.0
5S	6.1	30.0	–	–
6S	11.1	30.0	–	–

Series	Cable diameter range (mm)			
	Collet		Collet for fitting a bend relief	
	min.	max.	min.	max.
0E	1.0	5.0	1.0	5.0
1E	1.3	8.5[3]	1.3	8.5[3]
2E	1.3	10.5[3]	1.3	10.5[3]
3E	2.6	15.0[3]	2.6	15.0[3]
4E	4.8	23.5[3]	4.8	15.0
5E	9.6	23.5	–	–
6E	13.0	30.0	–	–

Note:
[1] for multipole only.
[2] for unipole only.
[3] for these series the maximum cable diameter require models with oversized cable collet (type K).

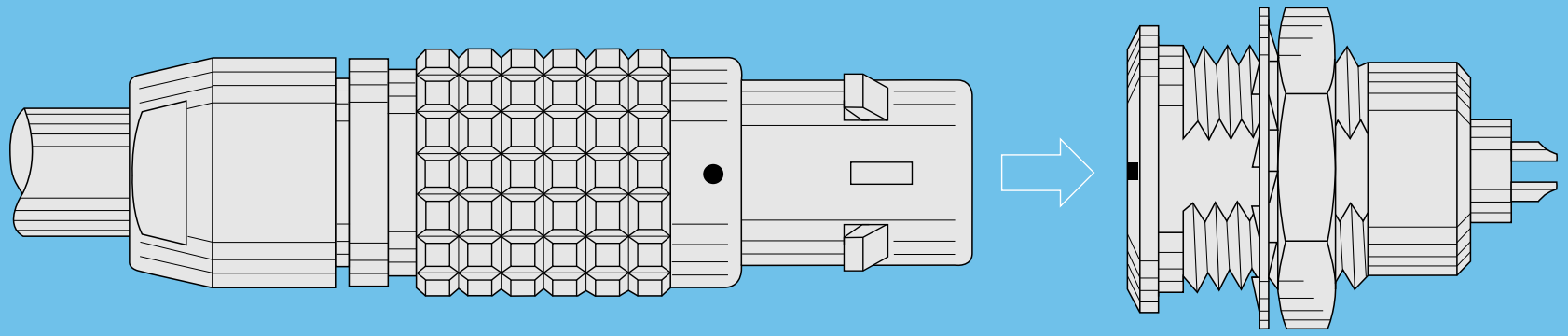

B SERIES

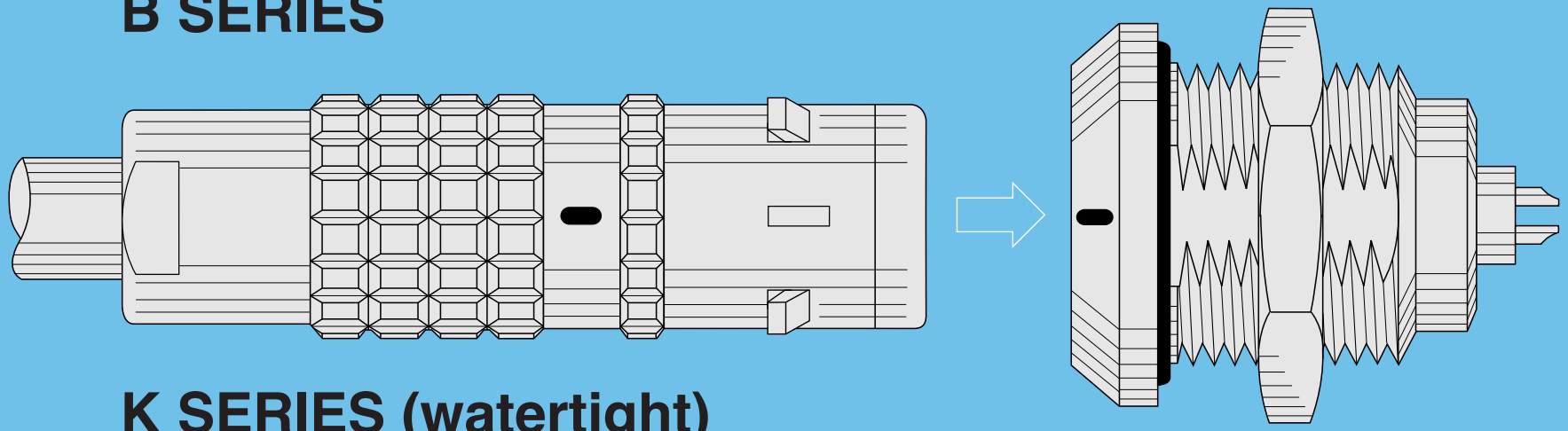

K SERIES (watertight)

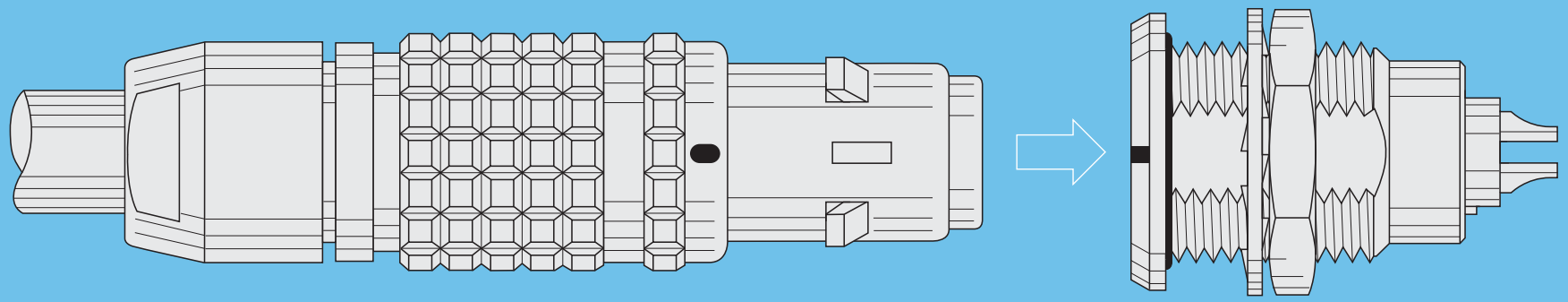

T SERIES (watertight)

B Series

B series connectors provide the following main features:
- security of the Push-Pull self-latching system
- solder, crimp or print contacts (straight or elbow)
- multiple key options to avoid cross mating of similar connectors
- 360° screening for full EMC shielding.
- multipole types 2 to 64 contacts
- high packing density for space savings
- keying system («G» key standard) for connector alignment

Metal housing models (page 14)

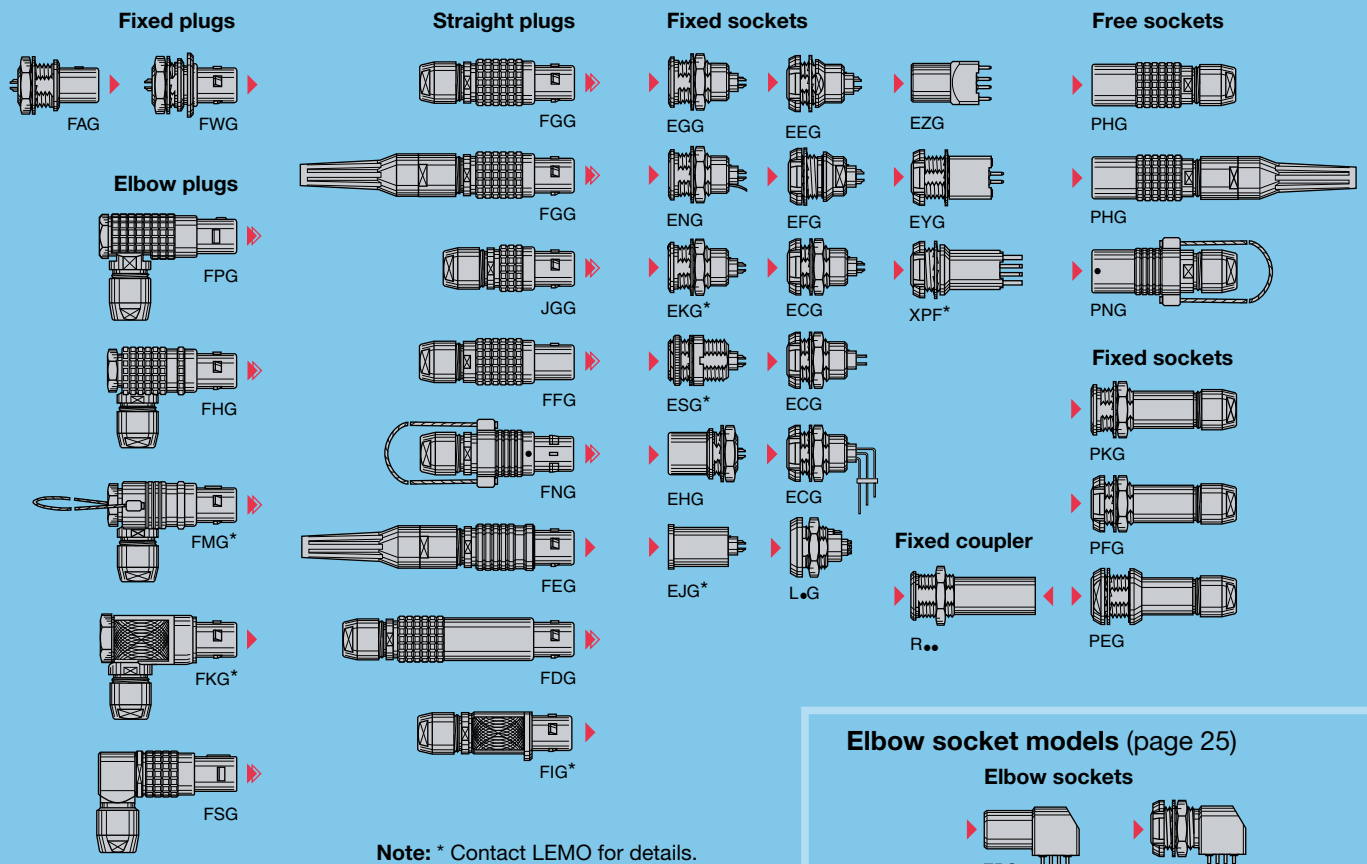

Note: * Contact LEMO for details.

Elbow socket models (page 25)

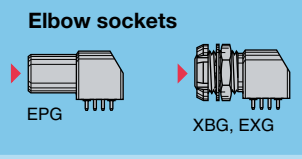

Plastic housing models (page 28)

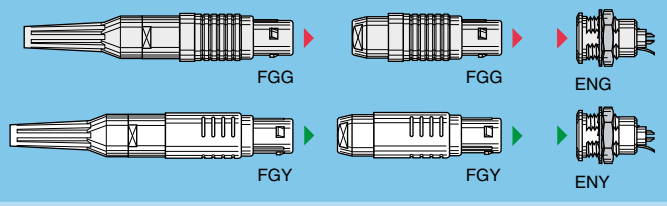

Bridge models (page 34)

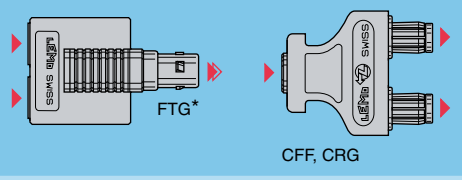

Watertight or vacuumtight models (page 30)

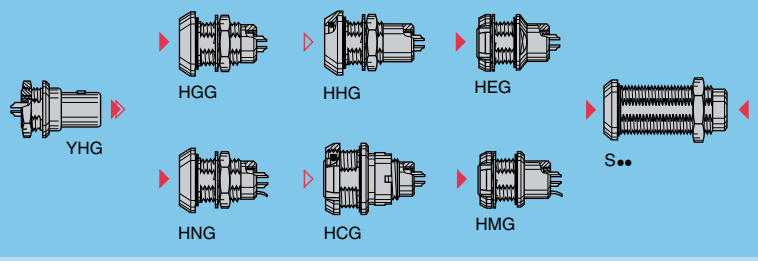

Threaded-latching models (page 35)

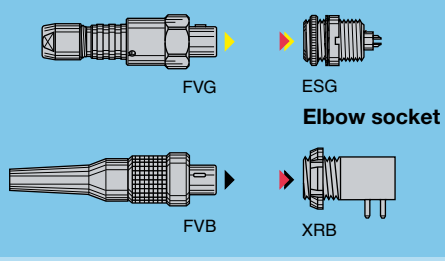

Part Numbering System

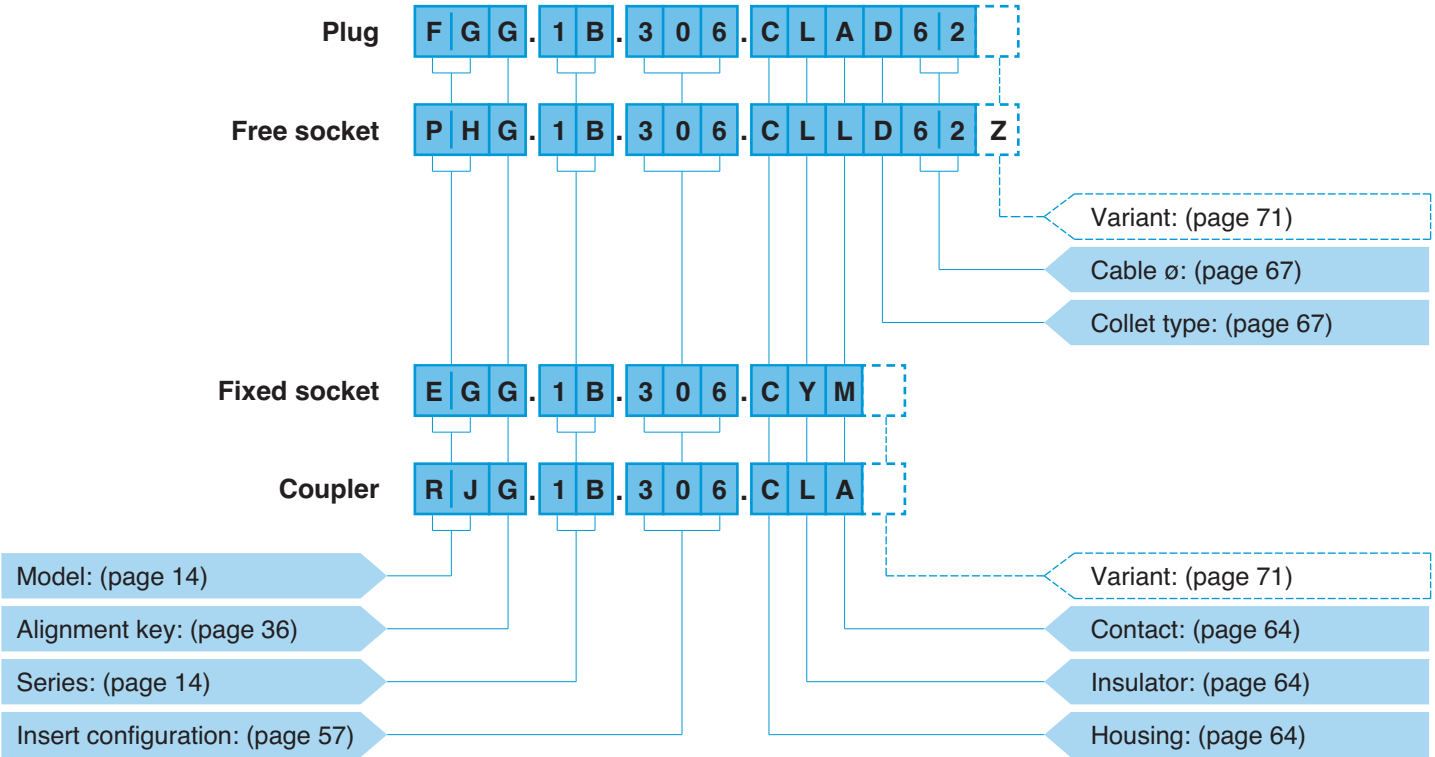

FGG.1B.306.CLAD62 = straight plug with key (G) and cable collet, 1B series, multipole type with 6 contacts, outer shell in chrome-plated brass, PEEK insulator, male solder contacts, D type collet for 6.0 mm diameter cable.

PHG.1B.306.CLLD62Z = free socket with key (G) and cable collet, 1B series, multipole type with 6 contacts, outer shell in chrome-plated brass, PEEK insulator, female solder contacts, D type collet for 6.0 mm diameter cable and nut for fitting a bend relief.

EGG.1B.306.CYM = fixed socket, nut fixing, with key (G), 1B series, multipole type with 6 contacts, outer shell in chrome-plated brass, PEEK extended insulator, female crimp contacts.

RJG.1B.306.CLA = straight fixed coupler with keys (J) at the flange end and key (G) at the other end, 1B series, multipole type with 6 contacts, outer shell in chrome-plated brass, PEEK insulator, male-female contacts.

Part Section Showing Internal Components

Fixed socket

1. outer shell
2. earthing crown
3. retaining ring
4. hexagonal nut
5. locking washer
6. insulator
7. female contact

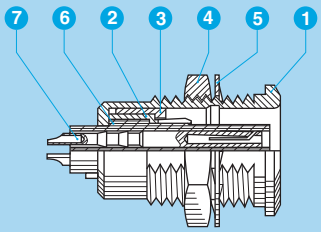

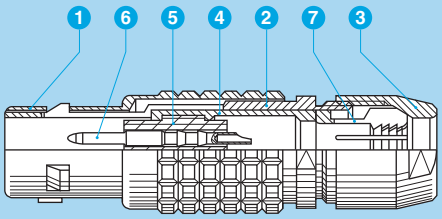

Straight plug

1. outer shell
2. latch sleeve
3. collet nut
4. split insert carrier
5. insulator
6. male contact
7. collet

Metal housing models

Technical Characteristics

Mechanical and Climatical

Characteristics	Value	Standard
Endurance[1]	> 5000 cycles[2]	IEC 60512-5 test 9a
Humidity	up to 95% at 60° C	
Temperature range	- 55° C, + 250° C	
Resistance to vibrations	10-2000 Hz, 15g	IEC 60512-4 test 6d
Shock resistance	100 g, 6 ms	IEC 60512-4 test 6c
Salt spray corrosion test[3]	> 1000h	IEC 60512-6 test 11f
Protection index (mated)	IP 50	IEC 60529
Climatical category	55/175/21	IEC 60068-1

Electrical

Characteristics		Value	Standard
Shielding efficiency	at 10 MHz	> 75 dB	IEC 60169-1-3
	at 1 GHz	> 40 dB	IEC 60169-1-3

Note:
the various tests have been carried out with FGG and EGG connector pairs, with chrome-plated brass shell and PEEK insulator.
Detailed electrical characteristics, as well as materials and treatment are presented in the chapter Technical Characteristics on page 182.
1) see page 189, contact resistance after mating cycles. See page 185, mechanical endurance latching force.
2) 1000 cycles for FEG models.
3) for chrome plated product (« C » material code).

FGG Straight plug, key (G) or keys (A…M and R), cable collet

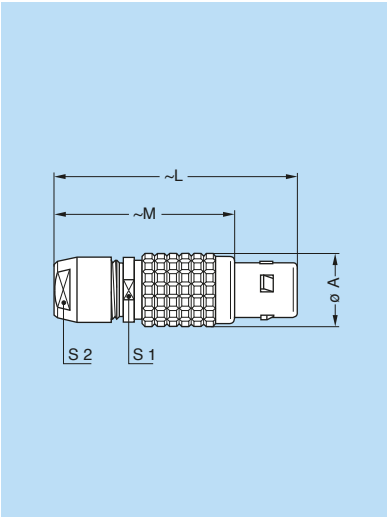

Reference		Dimensions (mm)				
Model	Series	A	L	M	S1	S2
FGG	00[1]	6.4	28.5	20.5	5.5	5
FGG	0B	9.5	36.0	26.0	8.0	7
FGG	1B	12.0	43.0	32.0	10.0	9
FGG	XB	13.0	44.0	33.5	11.0	10
FGG	2B	15.0	50.0	38.0	13.0	12
FGG	3B	18.0	58.0	43.0	15.0	14
FGG	4B	25.0	75.0	57.0	21.0	20
FGG	5B	35.0	103.0	78.0	31.0	30

M1 Cable assembly (page 169)

Note: 1) the surface design of the 00 series is different.

FGG Straight plug, key (G) or keys (A…M), cable collet and nut for fitting a bend relief 2)

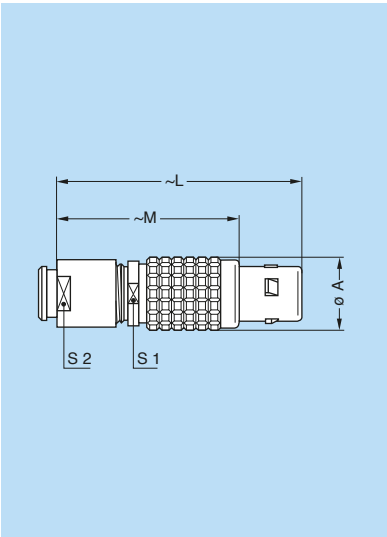

Reference		Dimensions (mm)				
Model	Series	A	L	M	S1	S2
FGG	00[1]	6.4	28.7	20.7	5.5	6
FGG	0B	9.5	35.0	25.0	8.0	7
FGG	1B	12.0	42.0	31.0	10.0	9
FGG	XB	13.0	47.5	37.0	11.0	10
FGG	2B	15.0	49.0	37.0	13.0	12
FGG	3B	18.0	56.5	41.5	15.0	15
FGG	4B	25.0	71.0	53.0	21.0	20

M1 Cable assembly (page 169)

Note: 1) the surface design of the 00 series is different.

Note: 2) to order, add a «Z» at the end of the reference.
The bend relief must be ordered separately (see page 145).

JGG Straight plug, short version, key (G), cable collet

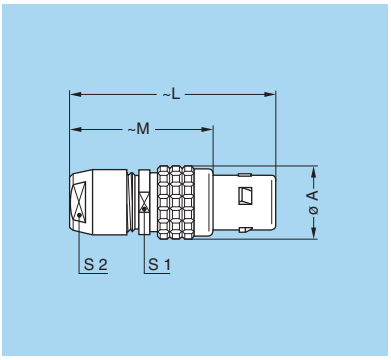

Reference		Dimensions (mm)				
Model	Series	A	L	M	S1	S2
JGG	**0B**	9.5	32	22	8	7

M4 Cable assembly (page 171)

FFG Straight plug, non-latching, key (G) or keys (A…M), cable collet

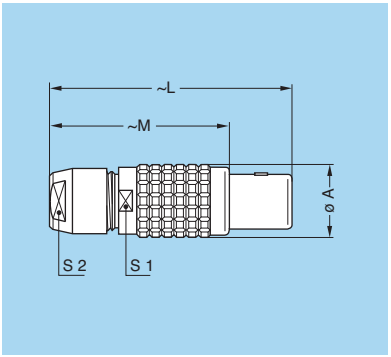

Reference		Dimensions (mm)				
Model	Series	A	L	M	S1	S2
FFG	**0B**	9.5	36	26	8	7
FFG	**1B**	12.0	43	32	10	9
FFG	**2B**	15.0	50	38	13	12
FFG	**3B**	18.0	58	43	15	14
FFG	**4B**	25.0	75	57	21	20

M1 Cable assembly (page 169)

FNG Straight plug, key (G) or keys (A…M and R), cable collet and lanyard release

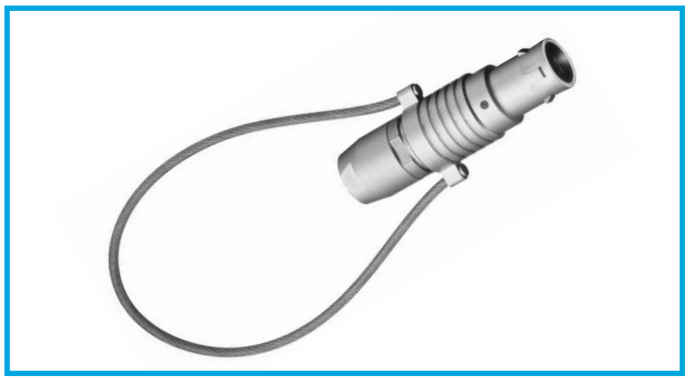

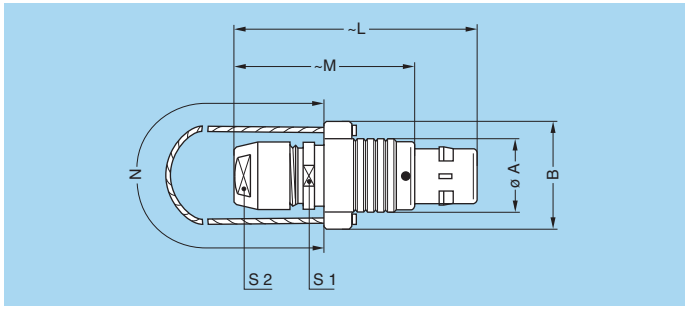

Reference		Dimensions (mm)						
Model	Series	A	B	L	M	N	S1	S2
FNG	**0B**	9.5	15.5	36.0	26.0	140	8	7
FNG	**1B**	12.0	18.0	43.0	32.0	140	10	9
FNG	**2B**	15.0	21.0	49.0	37.0	160	13	12
FNG	**3B**	18.0	25.0	58.0	43.0	190	15	14
FNG	**4B**	25.0	32.0	75.0	57.0	230	21	20
FNG	**5B**	35.0	42.0	103.0	78.0	300	31	30

M1 Cable assembly (page 169)

Note: cable material: stainless steel with Polyamide sheath.

FEG Straight plug, key (G) or keys (A…L), cable collet, front seal and nut for fitting a bend relief [1)]
(IP 54 protection index when mated)

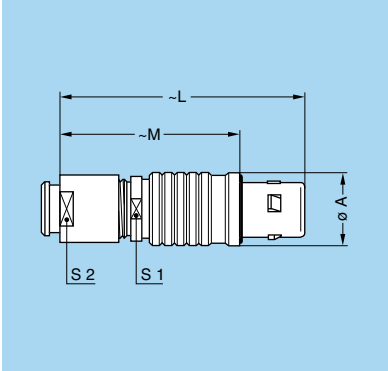

Reference		Dimensions (mm)				
Model	Series	A	L	M	S1	S2
FEG	**0B**	11.0	35.0	25.0	8	7
FEG	**1B**	13.5	42.0	33.0	10	9
FEG	**2B**	16.5	48.0	36.0	13	12
FEG	**3B**	19.0	56.5	41.5	15	15

M1 Cable assembly (page 169)

Note: [1)] to order, add a «Z» at the end of the reference.
The bend relief must be ordered separately (see page 145).

FDG Straight plug, long version, key (G) or keys (A…L), cable collet

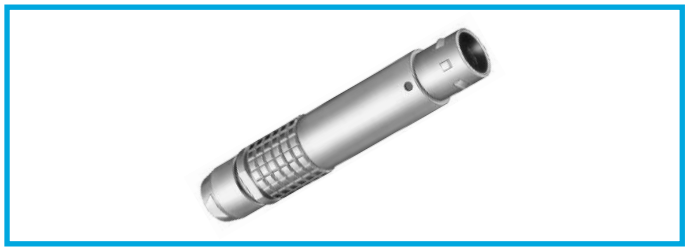

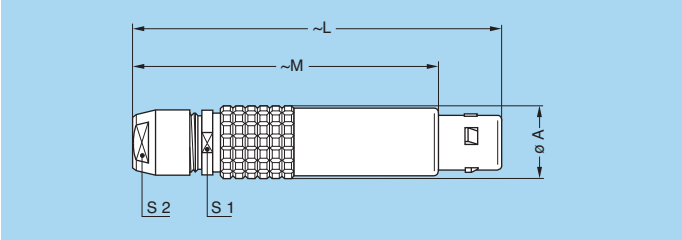

Reference		Dimensions (mm)				
Model	Series	A	L	M	S1	S2
FDG	**1B**	12	68	57	10	9
FDG	**2B**	15	79	67	13	12

M2 Cable assembly (page 171)

FWG Fixed plug, nut fixing, key (G) or keys (A…L)

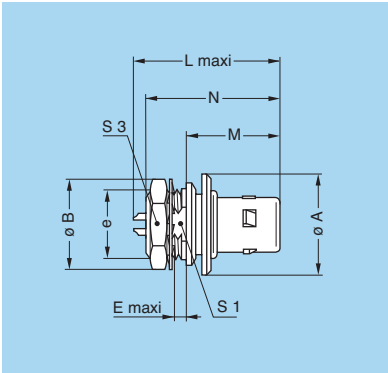

Reference		Dimensions (mm)								
Model	Series	A	B	e	E	L	M	N[1)]	S1	S3
FWG	**0B**	14.0	12.4	M9x0.6	1.8	22.5	14.5	19.5	8.2	11
FWG	**1B**	18.0	15.8	M12x1.0	2.9	24.9	17.0	24.8	10.5	14
FWG	**2B**	19.5	19.2	M15x1.0	4.1	28.6	18.0	27.3	13.5	17
FWG	**3B**	25.0	25.0	M18x1.0	4.2	32.1	23.0	31.5	16.5	22

P9 Panel cut-out (page 157)

Note: [1)] maximum length with crimp contacts

FAG Fixed plug, non-latching, nut fixing, key (G) or keys (A…M and R)

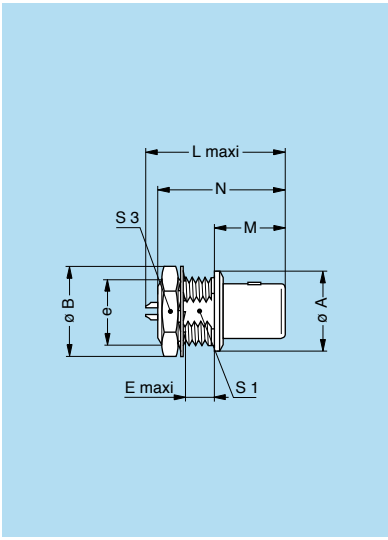

Reference		Dimensions (mm)								
Model	Series	A	B	e	E	L	M	N[1)]	S1	S3
FAG	00	8	10.2	M7x0.5	2.9	18.1	9.0	15.0	6.3	9
FAG	0B	10	12.4	M9x0.6	4.2	20.8	11.5	18.9	8.2	11
FAG	1B	14	15.8	M12x1.0	5.4	25.2	12.5	21.6	10.5	14
FAG	2B	18	19.2	M15x1.0	6.0	28.7	13.8	23.9	13.5	17
FAG	3B	22	25.0	M18x1.0	5.8	32.1	17.0	30.2	16.5	22
FAG	4B	29	34.0	M25x1.0	6.8	37.1	20.5	34.7	23.5	30
FAG	5B	40	40.0	M35x1.0	6.8	47.1	28.0	42.8	33.5	–

P1 Panel cut-out (page 157)

Note: The 5B series is delivered without locking washer or tapered washer and with a round nut.

Note: [1)] maximum length with crimp contacts.

FPG Elbow (90°) plug, key (G) or keys (A…M and R), cable collet

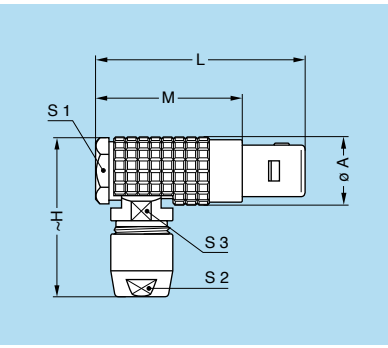

Reference		Dimensions (mm)						
Model	Series	A	H	L	M	S1	S2	S3
FPG	00	7.5	18	24.5	16.5	6.5	5	5.5
FPG	0B	9.5	23	30.0	20.0	8.0	7	8.0
FPG	1B	12.0	29	36.0	25.0	11.0	9	10.0
FPG	2B	15.0	35	41.5	29.5	13.5	12	13.0

M3 Cable assembly (page 169)

FHG Elbow (90°) plug, key (G) or keys (A…M and R), cable collet

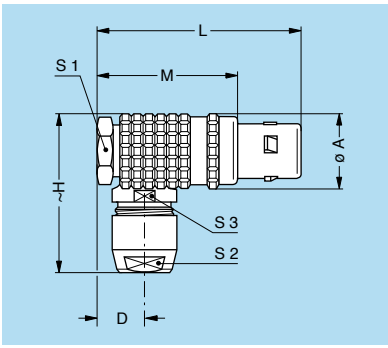

Reference		Dimensions (mm)							
Model	Series	A	D	H	L	M	S1	S2	S3
FHG	3B	19	10	37	50	35	17	14	15
FHG	4B	26	15	52	67	49	22	20	21
FHG	5B	36	21	74	90	65	32	30	31

M3 Cable assembly (page 169)

FSG Anglissimo right angle plug, key (G) or keys (A…M), cable collet

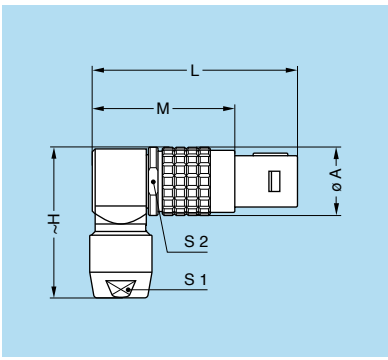

Reference		Dimensions (mm)					
Model	Series	A	H	L	M	S1	S2
FSG	00	8.0	18.1	24.8	16.8	5	7
FSG	0B	10.0	22.4	30.3	20.3	7	9
FSG	1B	12.0	26.4	36.5	25.5	9	11
FSG	2B	16.5	34.5	44.0	32.0	12	15
FSG	3B	20.0	39.2	52.4	37.4	14	19

M5 Cable assembly (page 170)

EGG Fixed socket, nut fixing, key (G) or keys (A…M and R)

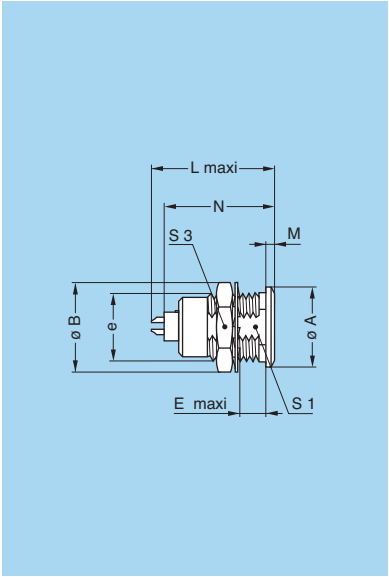

Reference		Dimensions (mm)								
Model	Series	A	B	e	E	L	M	N[1)]	S1	S3
EGG	**00**	8	10.2	M7x0.5	6.0	15.5	1.0	13.7	6.3	9
EGG	**0B**	10	12.4	M9x0.6	7.0	20.7	1.2	19.1	8.2	11
EGG	**1B**	14	15.8	M12x1.0	7.5	23.0	1.5	21.1	10.5	14
EGG	**XB**	16	19.0	M14x1.0	7.0	23.5	1.5	20.0	12.5	17
EGG	**2B** [2)]	18	19.2	M15x1.0	8.5	26.7	1.8	24.6	13.5	17
EGG	**3B**	22	25.0	M18x1.0	11.5	30.7	2.0	28.1	16.5	22
EGG	**4B**	28	34.0	M25x1.0	12.0	35.7	2.5	34.1	23.5	30
EGG	**5B**	40	40.0	M35x1.0	11.0	43.5	3.0	39.6	33.5	–

P1 Panel cut-out (page 157)

Note: The 5B series is delivered with a tapered washer and a round nut.

Note: [1)] maximum length with crimp contacts.
[2)] EGG.2B.304.CLL and EGG.2B.307.CLL are UL 508A under file E119802.

ENG Fixed socket with earthing tag, nut fixing, key (G) or keys (A…M)

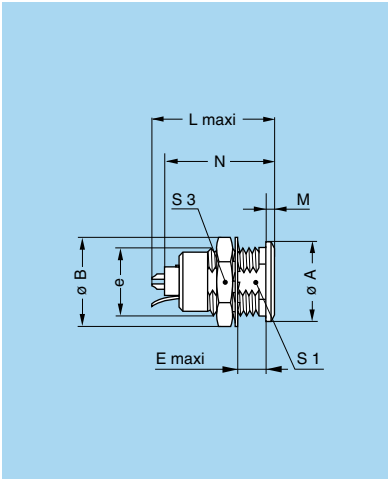

Reference		Dimensions (mm)								
Model	Series	A	B	e	E	L	M	N[1)]	S1	S3
ENG	**00**	8	10.2	M7x0.5	6.0	15.5	1.0	13.7	6.3	9
ENG	**0B**	10	12.4	M9x0.6	7.0	20.7	1.2	19.1	8.2	11
ENG	**1B** [2)]	14	15.8	M12x1.0	7.5	23.0	1.5	21.1	10.5	14
ENG	**2B**	18	19.2	M15x1.0	8.5	26.7	1.8	24.6	13.5	17
ENG	**3B**	22	25.0	M18x1.0	11.5	30.7	2.0	28.1	16.5	22
ENG	**4B**	28	34.0	M25x1.0	12.0	35.7	2.5	34.1	23.5	30

P1 Panel cut-out (page 157)

Note:
[1)] maximum length with crimp contacts.
[2)] for the 1B series the earthing tag is on the same side of the key.

EHG Fixed socket, nut fixing, key (G) or keys (A…M and R), and protruding shell

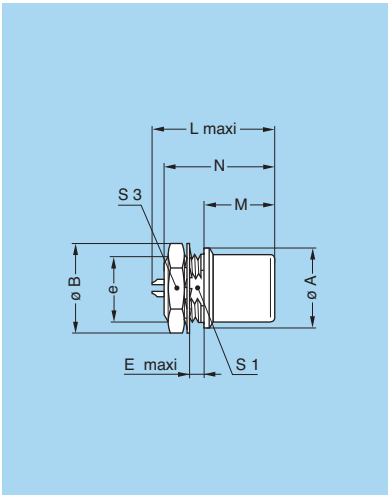

Reference		Dimensions (mm)								
Model	Series	A	B	e	E	L	M	N[1)]	S1	S3
EHG	**00**	8	10.2	M7x0.5	2.0	15.5	8.5	13.7	6.3	9
EHG	**0B**	10	12.4	M9x0.6	2.0	19.5	12.5	19.1	8.2	11
EHG	**1B**	14	15.8	M12x1.0	4.0	21.7	12.0	21.1	10.5	14
EHG	**2B**	18	19.2	M15x1.0	5.1	22.7	12.5	24.6	13.5	17
EHG	**3B**	22	25.0	M18x1.0	7.1	30.7	13.5	30.3	16.5	22
EHG	**5B**	40	40.0	M35x1.0	2.5	43.5	28.0	38.5	33.5	–

P1 Panel cut-out (page 157)

Note: The 5B series is delivered without locking washer or tapered washer and with a round nut.

Note: [1)] maximum length with crimp contacts.

EEG Fixed socket, nut fixing, key (G) or keys (A…M and R) (back panel mounting)

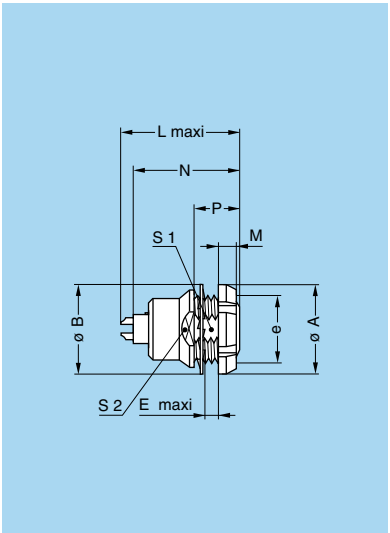

Reference		Dimensions (mm)									
Model	Series	A	B	e	E	L	M	N[1)]	P	S1	S2
EEG	00	10	9.5	M7x0.5	2.3	15.5	2.5	13.7	6.0	6.3	7.5
EEG	0B	12	12.5	M9x0.6	2.4	20.7	2.5	19.1	6.3	8.2	9.0
EEG	1B	16	16.0	M12x1.0	6.5	23.0	3.5	21.1	11.0	10.5	13.0
EEG	2B	20	20.0	M15x1.0	4.3	26.7	3.5	24.6	9.0	13.5	15.0
EEG	3B	24	25.0	M18x1.0	6.1	30.7	4.5	28.1	12.0	16.5	20.0
EEG	4B	30	32.1	M25x1.0	10.6	35.7	4.5	34.1	16.5	23.5	26.0
EEG	5B	41	40.0	M35x1.0	13.5	43.5	5.0	39.6	19.5	33.5	38.0

P1 Panel cut-out (page 157)

Note: The 3B, 4B and 5B series are delivered with a conical nut.
The 5B series is delivered without locking washer or tapered washer.

Note: 1) maximum length with crimp contacts.

EFG Fixed socket, nut fixing, key (G) or keys (A…M), with two flats on the shell and O-ring (back panel mounting)

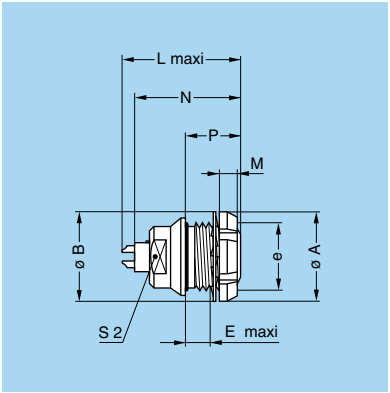

Reference		Dimensions (mm)								
Model	Series	A	B	e	E	L	M	N[1)]	P	S2
EFG	0B	12	12.5	M9x0.6	5.5	20.7	2.5	19.1	9	8

P2 Panel cut-out (page 157)

Note: 1) maximum length with crimp contacts.

ECG Fixed socket with two nuts, key (G) or keys (A…M and R) (back panel mounting)

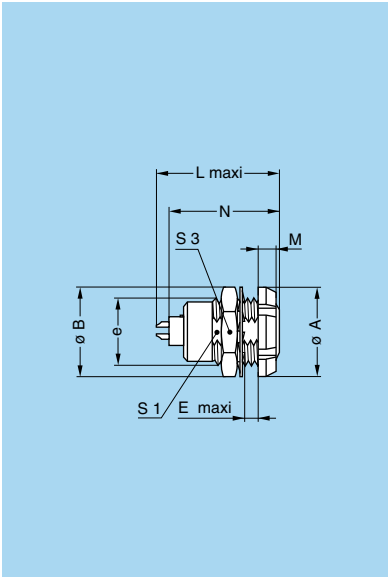

Reference		Dimensions (mm)								
Model	Series	A	B	e	E	L	M	N[1)]	S1	S3
ECG	00	10	10.2	M7x0.5	4.3	13.7	2.5	13.7	6.3	9
ECG	0B	12	12.4	M9x0.6	5.5	20.7	2.5	19.1	8.2	11
ECG	1B	16	15.8	M12x1.0	6.0	23.0	3.5	21.1	10.5	14
ECG	XB	18	19.0	M14x1.0	6.0	23.5	3.5	20.0	12.5	17
ECG	2B	20	19.2	M15x1.0	6.5	26.7	3.5	24.6	13.5	17
ECG	3B	24	25.0	M18x1.0	9.0	30.7	4.5	28.1	16.5	22
ECG	4B	30	34.0	M25x1.0	10.0	35.7	4.5	32.6	23.5	30
ECG	5B	41	40.0	M35x1.0	9.0	43.5	5.0	39.6	33.5	–

P1 Panel cut-out (page 157)

Note: The 3B, 4B and 5B series are delivered with a conical nut.
The 5B series is delivered with a tapered washer and a round nut.

Note: 1) maximum length with crimp contacts.

ECG Fixed socket with two nuts, key (G) or keys (A…F and R) and straight contact for printed circuit
(back panel mounting)

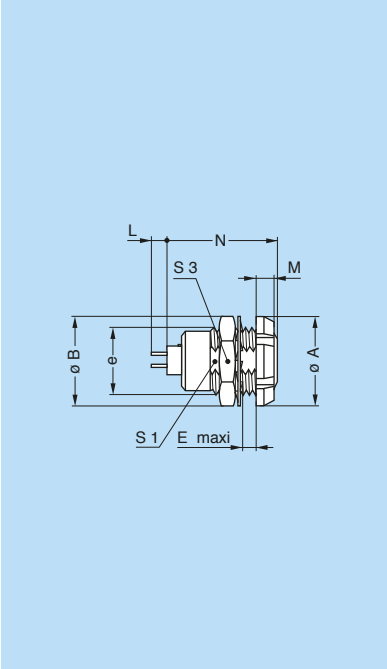

Reference		Dimensions (mm)							
Model	Series	A	B	e	E	M	N	S1	S3
ECG	00	10	10.2	M7x0.5	4.3	2.5	13.7	6.3	9
ECG	0B	12	12.4	M9x0.6	5.5	2.5	16.1	8.2	11
ECG	1B	16	15.8	M12x1.0	6.0	3.5	19.8	10.5	14
ECG	XB	18	19.0	M14x1.0	6.0	3.5	20.0	12.5	17
ECG	2B	20	19.2	M15x1.0	6.5	3.5	21.8	13.5	17
ECG	3B	24	25.0	M18x1.0	9.0	4.5	25.8	16.5	22
ECG	4B	30	34.0	M25x1.0	10.0	4.5	29.8	23.5	30
ECG	5B	41	40.0	M35x1.0	9.0	5.0	36.8	33.5	–

P1 Panel cut-out (page 157)

P15 PCB drilling pattern (page 160)

Note: The 3B, 4B and 5B series are delivered with a conical nut.
The 5B series is delivered with a tapered washer and a round nut.

Note: This contact type is available for E●● socket models fitted with female contacts.
Length «L» depends on the number of contacts, see table on page 163.

ECG Fixed socket with two nuts, key (G) or keys (A…F) with elbow (90°) contact for printed circuit
(back panel mounting)

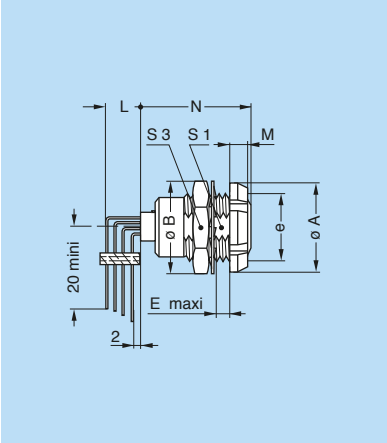

Reference		Dimensions (mm)							
Model	Series	A	B	e	E	M	N max	S1	S3
ECG	0B	12	12.4	M9x0.6	5.5	2.5	18.3	8.2	11
ECG	1B	16	15.8	M12x1.0	6.0	3.5	20.3	10.5	14
ECG	2B	20	19.2	M15x1.0	6.5	3.5	24.3	13.5	17
ECG	3B	24	25.0	M18x1.0	9.0	4.5	27.8	16.5	22

P1 Panel cut-out (page 157)

P17 PCB drilling pattern (page 164)

Note: The 3B series is delivered with a conical nut.

L●G Fixed socket, nut fixing, key (G) or keys (A…L)

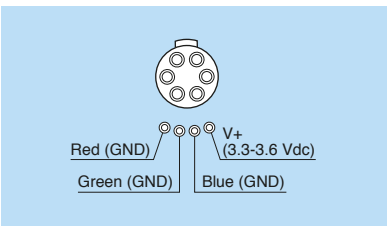

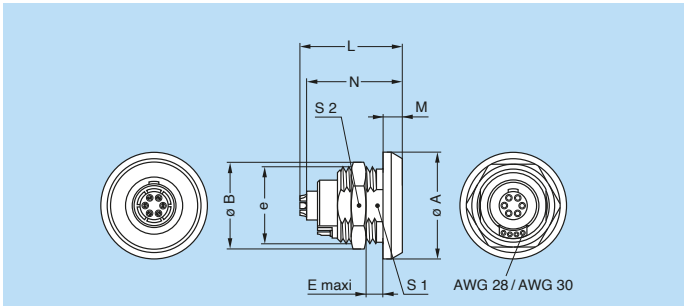

Reference		Dimensions (mm)								
Model	Series	A	B	e	E	L	M	N	S1	S2
L●G	0B	19	18.0	M13x0.75	4.0	20.7	4	19.1	11.5	16
L●G	1B	22	20.2	M15x1.00	6.5	23.0	4	21.1	13.5	16
L●G	2B	25	27.0	M20x1.00	7.5	26.7	4	24.6	18.5	24

Note: Only available with solder or crimp contacts.
LEG model is with LED flange, LNG model is with narrow LED flange and LMG model is with single standby LED flange.

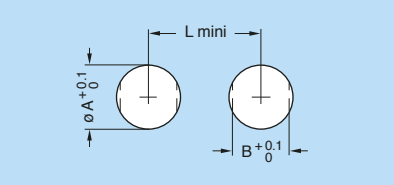

Series	Dim. (mm)		
	A	B	L
0B	13.1	11.6	24
1B	15.1	13.6	26
2B	20.1	18.6	29

EZG Straight socket for printed circuit, key (G) or keys (A, B)

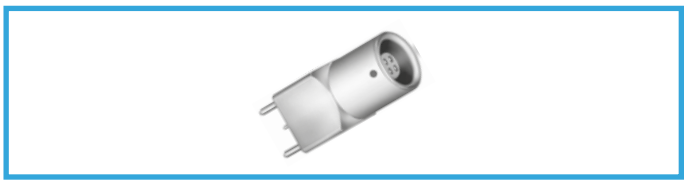

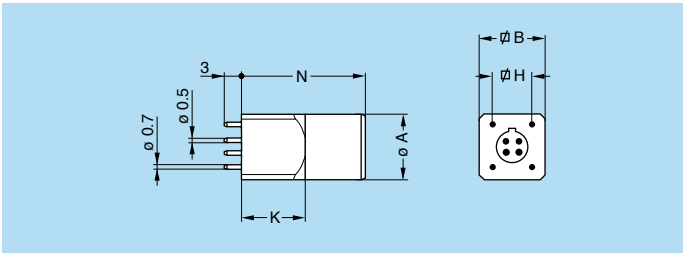

Reference		Dimensions (mm)				
Model	Series	A	B	H	K	N
EZG	**00**	6.8	7	5.08	7	14

P15 + P16 PCB drilling pattern (pages 160 and 163)

EZG Straight socket for printed circuit, key (G) or keys (A…F)

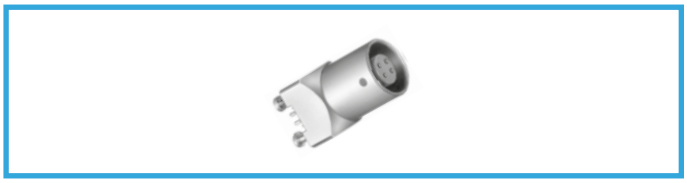

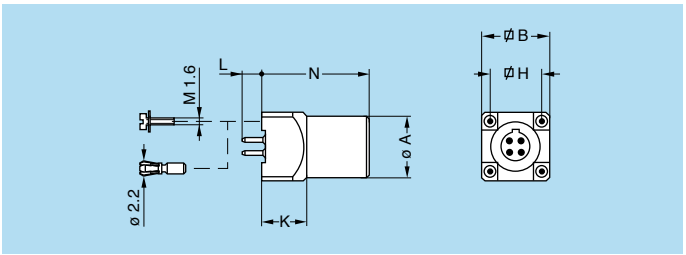

Reference		Dimensions (mm)				
Model	Series	A	B	H	K	N
EZG	**0B**	9	10	7.62	8	15.0
EZG	**1B**	11	12	7.62	8	19.0
EZG	**2B**	14	15	10.16	9	22.5

P15 + P16 PCB drilling pattern (pages 160 and 163)

Note: Length «L» depends on the number of contacts, see page 163. Add letter «B» at the end of the reference to order with integrated harpoon pins (1.6 mm PCB thickness) (only for 0B and 1B series).

EYG Fixed socket for printed circuit, nut fixing, key (G) or keys (A…F) (back panel mounting)

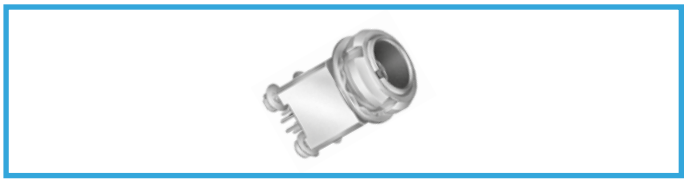

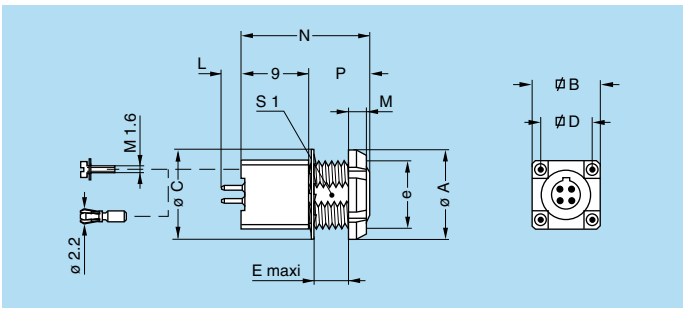

Reference		Dimensions (mm)									
Model	Series	A	B	C	D	e	E	M	N	P	S1
EYG	**0B**	12	10	12.5	7.62	M9x0.6	2.6	2.5	15.0	6.0	8.2
EYG	**1B**	14	12	16.0	7.62	M11x0.5	5.0	3.5	19.0	10.0	–
EYG	**2B**	20	15	19.5	10.16	M15x1.0	7.5	3.5	22.5	13.5	13.5

P1 Panel cut-out 0B and 2B series (page 157)

P10 Panel cut-out 1B series (page 157)

P15 + P16 PCB drilling pattern (pages 160 and 163)

Note: Length «L» depends on the number of contacts, see page 163. Add letter «B» at the end of the reference to order with integrated harpoon pins (1.6 mm PCB thickness) (only for 0B and 1B series).

PHG Free socket, key (G) or keys (A…M and R), cable collet

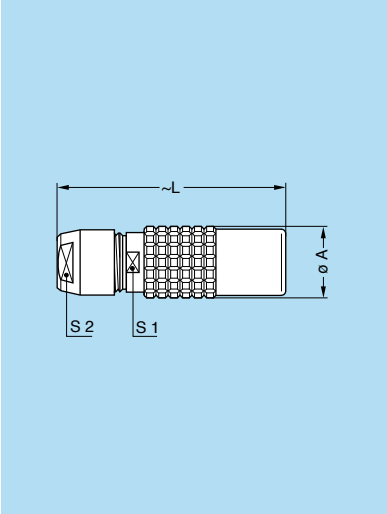

Reference		Dimensions (mm)			
Model	Series	A	L	S1	S2
PHG	**00**[1]	6.8	26.0	5.5	5
PHG	**0B**	9.5	35.5	8.0	7
PHG	**1B**	12.5	40.5	10.0	9
PHG	**XB**	13.0	46.0	11.0	10
PHG	**2B**	16.5	47.0	13.0	12
PHG	**3B**	19.0	56.0	15.0	14
PHG	**4B**	26.0	73.0	21.0	20
PHG	**5B**	36.0	99.0	31.0	30

M1 Cable assembly (page 169)

Note: [1] the surface design of the 00 series is different.

PHG Free socket, key (G) or keys (A…M), cable collet and nut for fitting a bend relief [2]

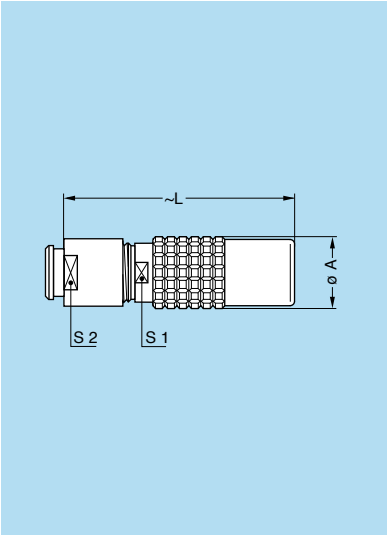

Reference		Dimensions (mm)			
Model	Series	A	L	S1	S2
PHG	**00**[1]	6.8	34.0	5.5	6
PHG	**0B**	9.5	34.5	8.0	7
PHG	**1B**	12.5	39.5	10.0	9
PHG	**XB**	13.0	49.5	11.0	10
PHG	**2B**	16.5	46.0	13.0	12
PHG	**3B**	19.0	54.5	15.0	15
PHG	**4B**	26.0	69.0	21.0	20

M1 Cable assembly (page 169)

Note: [1] the surface design of the 00 series is different.

Note: [2] to order, add a «Z» at the end of the reference.
The bend relief must be ordered separately (see page 145).

PNG Free socket, nut fixing, key (G) or keys (A…L and R), cable collet with lanyard release

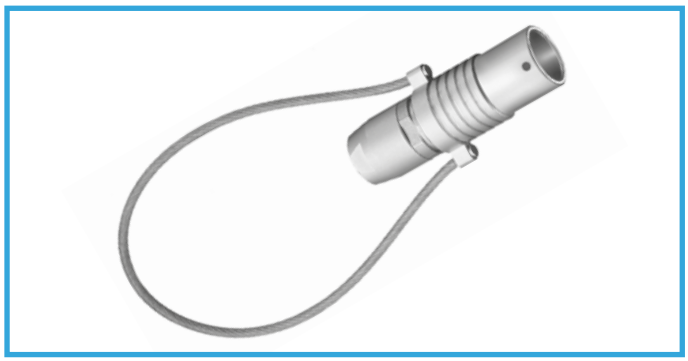

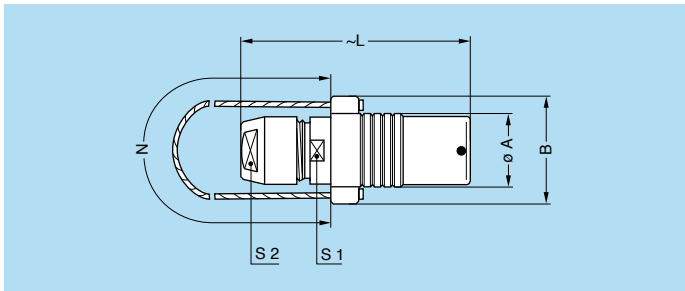

Reference		Dimensions (mm)					
Model	Series	A	B	L	N	S1	S2
PNG	**1B**	12.4	18.4	40.5	140	10	9
PNG	**2B**	16.5	22.5	47.0	160	13	12
PNG	**3B**	19.0	26.0	56.0	190	15	14
PNG	**4B**	26.0	33.0	73.0	230	21	20
PNG	**5B**	36.0	43.0	99.0	300	31	30

M1 Cable assembly (page 169)

Note: cable material: stainless steel with Polyamide sheath.

PKG Fixed socket, nut fixing, key (G) or keys (A…M and R), cable collet

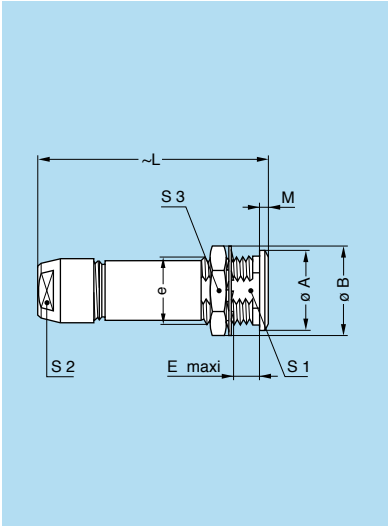

Reference		Dimensions (mm)								
Model	Series	A	B	e	E	L	M	S1	S2	S3
PKG	**00**	8	10.2	M7x0.5	6.5	26.0	1.0	6.3	5	9
PKG	**0B**	10	12.4	M9x0.6	7.0	35.5	1.2	8.2	7	11
PKG	**1B**	14	15.8	M12x1.0	7.5	40.5	1.5	10.5	9	14
PKG	**2B**	18	19.2	M15x1.0	8.5	47.0	1.8	13.5	12	17
PKG	**3B**	22	25.0	M18x1.0	11.5	56.0	2.0	16.5	14	22
PKG	**4B**	28	34.0	M25x1.0	12.0	73.0	2.5	23.5	20	30
PKG	**5B**	40	40.0	M35x1.0	11.0	99.0	3.0	33.5	30	–

P1 Panel cut-out (page 157)

M1 Cable assembly (page 169)

Note: the 5B series is delivered with a tapered washer and a round nut.

PFG Fixed socket, with two nuts, key (G) or keys (A…M and R), cable collet (back panel mounting)

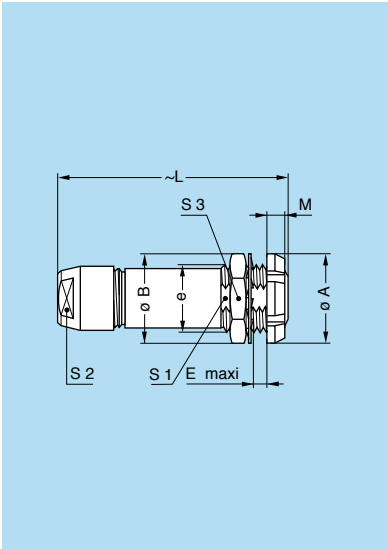

Reference		Dimensions (mm)								
Model	Series	A	B	e	E	L	M	S1	S2	S3
PFG	**00**	10	10.2	M7x0.5	5.3	26.0	2.5	6.3	5	9
PFG	**0B**	12	12.4	M9x0.6	5.0	35.5	2.5	8.2	7	11
PFG	**1B**	16	15.8	M12x1.0	5.0	40.5	3.5	10.5	9	14
PFG	**2B**	20	19.2	M15x1.0	6.5	47.0	3.5	13.5	12	17
PFG	**3B**	24	25.0	M18x1.0	9.0	56.0	4.5	16.5	14	22
PFG	**4B**	30	34.0	M25x1.0	11.0	73.0	4.5	23.5	20	30
PFG	**5B**	41	40.0	M35x1.0	10.0	99.0	5.0	33.5	30	–

P1 Panel cut-out (page 157)

M1 Cable assembly (page 169)

Note: the 3B, 4B and 5B series are delivered with a conical nut.
The 5B series is delivered with a tapered washer and a round nut.

PEG Fixed socket, nut fixing, key (G) or keys (A…L), cable collet (back panel mounting)

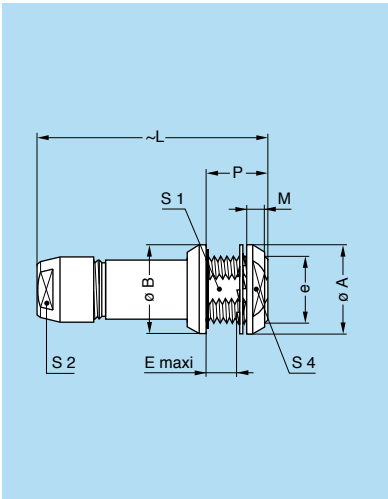

Reference		Dimensions (mm)									
Model	Series	A	B	e	E	L	M	P	S1	S2	S4
PEG	**3B**	24	25	M18x1.0	5.0	56	4.5	12	16.5	14	20
PEG	**4B**	32	34	M25x1.0	12.5	73	5.0	20	23.5	20	27

P1 Panel cut-out (page 157)

M1 Cable assembly (page 169)

Note: this model has an o-ring on the flange.

R●● Fixed coupler, nut fixing, key (G) or keys (A and J) at the flange end and keys (J, K or M) at the other end

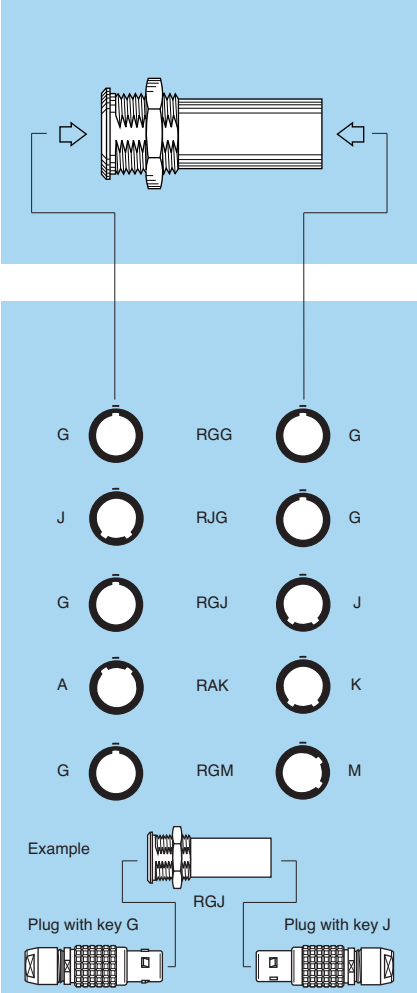

Alignment key see page 36.

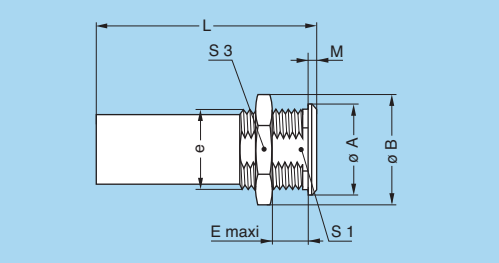

Reference		Contacts	Dimensions (mm)							
Model	Series	Type	A	B	e	E	L	M	S1	S3
RGG[1]	**0B**	female – female	12	13.8	M10x0.75	8.0	34	2.0	9.0	12
RGG[2]	**0B**	female – female	12	13.8	M10x0.75	8.0	43	2.0	9.0	12
RJG	**0B**	male – female	12	13.8	M10x0.75	8.0	34	2.0	9.0	12
RGJ	**0B**	female – male	12	13.8	M10x0.75	8.0	34	2.0	9.0	12
RAK	**0B**	female – male	12	13.8	M10x0.75	8.0	34	2.0	9.0	12
RGM	**0B**	female – male	12	13.8	M10x0.75	8.0	34	2.0	9.0	12
RGG[3]	**1B**	female – female	16	19.2	M14x1.00	8.5	47	2.5	12.5	17
RJG	**1B**	male – female	16	19.2	M14x1.00	8.5	39	2.5	12.5	17
RGJ	**1B**	female – male	16	19.2	M14x1.00	8.5	39	2.5	12.5	17
RJG	**2B**	male – female	20	21.5	M16x1.00	12.0	44	4.0	15.0	19
RGJ	**2B**	female – male	20	21.5	M16x1.00	12.0	44	4.0	15.0	19
RGJ	**3B**	female – male	25	27.0	M20x1.00	32.0	53	4.0	18.5	24
RGJ	**4B**	female – male	34	34.0	M25x1.00	50.0	65	4.0	23.5	30

P4 Panel cut-out (page 157)

Note:
[1] only available with two contacts.
[2] RGG.0B only available from 3 till 5 contacts.
[3] RGG.1B only available till 7 contacts.
For this fixed coupler, the first contact type mentioned is always the one at the flange end. On request, these couplers can be produced in other series, with other keys.

Elbow socket models

Technical Characteristics

Types

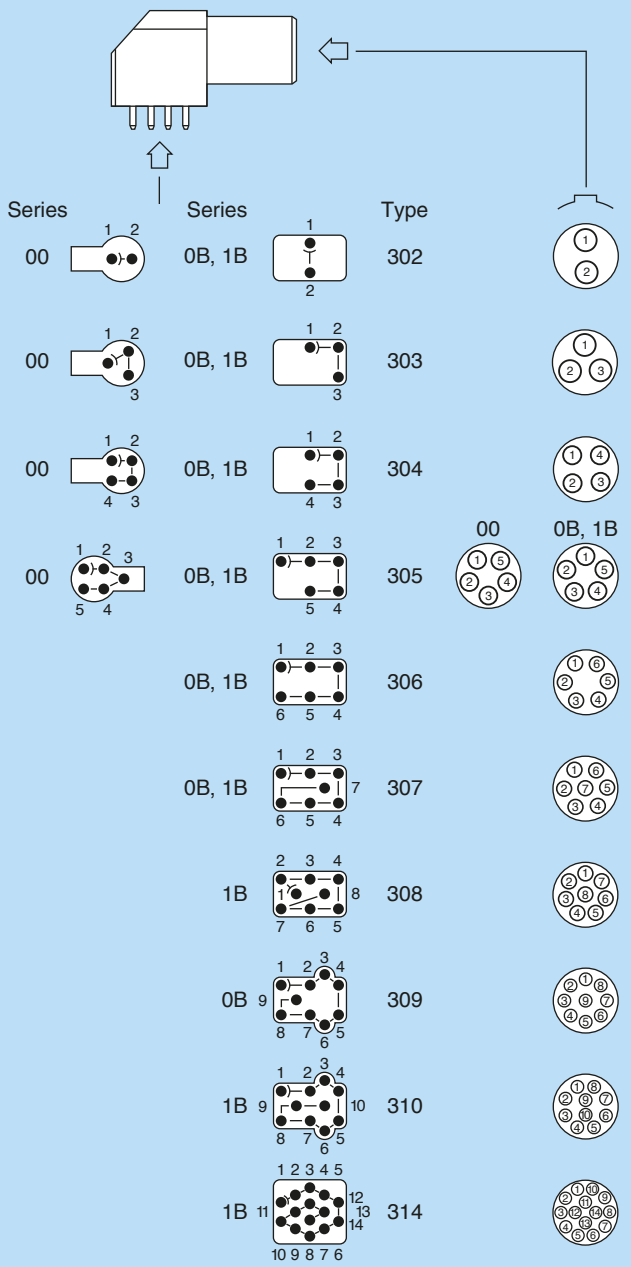

Note:
numbering sequence shown is for female contacts (G keying), for inverted contacts please contact factory.

Materials and Treatment

Component	Material	Surface Treat. (µm)		
		Cu	Ni	Au
Housing	PPS	–		
	Brass	0.5	3	–
Metallic parts	Brass	0.5	3	–
Earthing crown	Bronze	0.5	3	–
Insulator	PEEK	–		
Female contact	Bronze	0.5	3	1.5

Note:
The surface treatment standards are as follows:
– Nickel: SAE AMS QQ N 290. – Gold: ISO 27874

Electrical

Model	Series	Types	Test voltage (kV rms)[1] Contact-contact	Test voltage (kV rms)[1] Contact-shell	Rated current (A)[1]
EPG-XBG	**00**	302-303-304-305	1.00	1.00	2.0
EPG-EXG	**0B**	302	1.45	1.20	4.5
EPG-EXG	**0B**	303	1.70	1.60	4.5
EPG-EXG	**0B**	304	1.30	1.10	4.5
EPG-EXG	**0B**	305	1.25	1.20	4.5
EPG-EXG	**0B**	306	1.25	1.20	2.5
EPG-EXG	**0B**	307	1.00	1.00	2.0
EPG-EXG	**0B**	309	0.60	0.50	1.5
EPG-EXG	**1B**	302	1.70	1.45	4.5
EPG-EXG	**1B**	303	1.60	1.85	4.5
EPG-EXG	**1B**	304	1.70	1.80	4.5
EPG-EXG	**1B**	305	1.30	1.55	4.5
EPG-EXG	**1B**	306	1.35	1.45	4.5
EPG-EXG	**1B**	307	1.45	1.45	2.0
EPG-EXG	**1B**	308	1.30	1.30	2.0
EPG-EXG	**1B**	310	1.00	1.00	1.5
EPG	**1B**	314	1.00	1.30	1.0

Note:
[1] see calculation method, caution and suggested standard on page 190.

P18 PCB drilling pattern (page 165)

P19 PCB drilling pattern (page 165)

EPG Elbow (90°) socket for printed circuit, key (G) or keys (A…F) (solder or screw fixing)

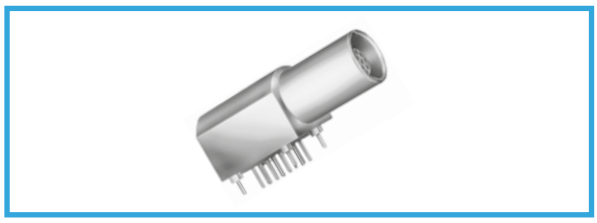

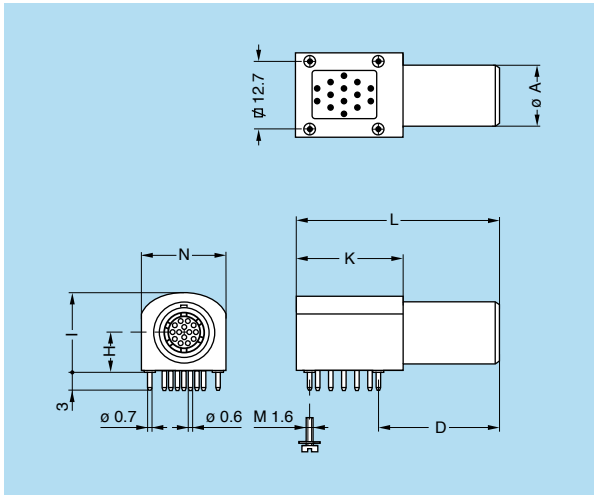

Part number	Dimensions (mm)						
	A	D	H	I	K	L	N
EPG.1B.314.NLN	11	21	7.7	14.3	19	36	15.4

P20 PCB drilling pattern (page 165)

Note: to replace the 4 ground pins by 4 screws (M1.6) add an «S» to the end of the part number. (e.g.: EPG.1B.314.NLNS)

EPG Elbow (90°) socket for printed circuit, key (G) or keys (A…F) (solder, screw or harpoon fixing)

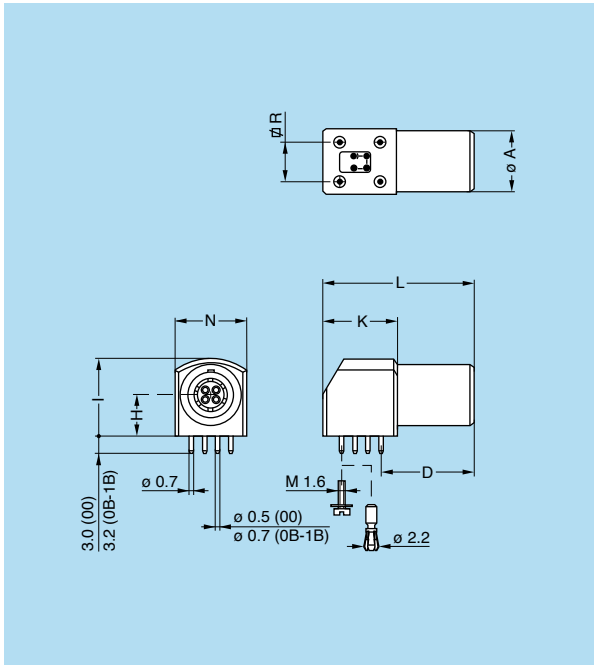

Part number	Dimensions (mm)							
	A	D	H	I	K	L	N	R
EPG.00.302.HLN	6.8	11.5	3.5	7.0	8.7	19	7.1	5.08
EPG.00.303.HLN								
EPG.00.304.HLN								
EPG.00.305.HLN								
EPG.0B.302.HLN	9.0	14.6	6.7	12.6	13.3	25	11.7	7.62
EPG.0B.303.HLN								
EPG.0B.304.HLN								
EPG.0B.305.HLN								
EPG.0B.306.HLN								
EPG.0B.307.HLN								
EPG.0B.309.HLN								
EPG.1B.302.HLN	11.0	16.6	7.5	14.0	13.3	27	12.6	7.62
EPG.1B.303.HLN								
EPG.1B.304.HLN								
EPG.1B.305.HLN								
EPG.1B.306.HLN								
EPG.1B.307.HLN								
EPG.1B.308.HLN								
EPG.1B.310.HLN								

Note: In the 0B and 1B series, it is possible to replace the 4 ground pins by 4 screws (M1.6) add an «S» to the end of the part number. (e.g.: EPG.0B.307.HLNS).
A second alternative is to add an «B» at the end of the part number (EPG.0B.307.HLNB), the connector is delivered with integrated harpoon pins for rapidly assembly (1.6 mm PCB thickness).

P18 PCB drilling pattern 00 series (page 165)

P19 PCB drilling pattern 0B, 1B series (page 165)

EXG Elbow (90°) socket for printed circuit with two nuts, key (G) or keys (A…F) (solder, screw or harpoon fixing) (back panel mounting)

XBG Elbow (90°) socket fixing nut for printed circuit, key (G) or keys (A, B) (back panel mounting)

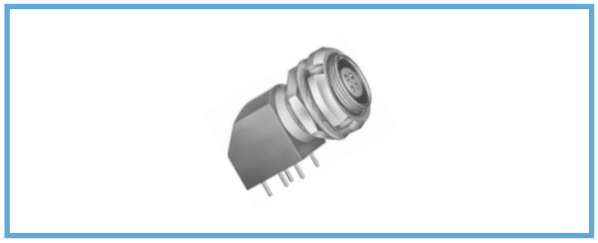

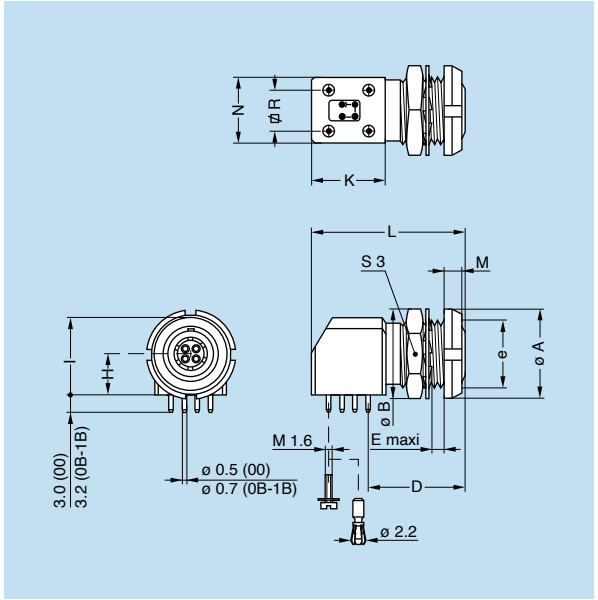

Part number	Dimensions (mm)												
	A	B	D	e	E	H	I	K	L	M	N	R	S3
XBG.00.302.HLN													
XBG.00.303.HLN	10	10.2	11.5	M7x0.5	2.1	3.5	7.0	8.7	19	2.5	7.1	5.08	9
XBG.00.304.HLN													
EXG.0B.302.HLN													
EXG.0B.303.HLN													
EXG.0B.304.HLN													
EXG.0B.305.HLN	12	12.4	14.6	M9x0.6	4.5	6.7	12.6	13.3	25	2.5	11.7	7.62	11
EXG.0B.306.HLN													
EXG.0B.307.HLN													
EXG.0B.309.HLN													
EXG.1B.302.HLN													
EXG.1B.303.HLN													
EXG.1B.304.HLN													
EXG.1B.305.HLN	14	15.0	16.6	M11x0.5	4.5	7.5	14.0	13.3	27	3.5	12.6	7.62	13
EXG.1B.306.HLN													
EXG.1B.307.HLN													
EXG.1B.308.HLN													
EXG.1B.310.HLN													

Note: In the 0B and 1B series, it is possible to replace the 4 ground pins by 4 screws (M1.6) add an «S» to the end of the part number. (e.g.: EXG.0B.307.HLNS).
A second alternative is to add an «B» at the end of the part number (EXG.0B.307.HLNB), the connector is delivered with integrated harpoon pins for rapidly assembly (1.6 mm PCB thickness).

P2 Panel cut-out 00, 0B series (page 157)

P10 Panel cut-out 1B series (page 157)

P18 PCB drilling pattern 00 series (page 165)

P19 PCB drilling pattern 0B, 1B series (page 165)

Plastic housing models

These connectors are particularly recommended for all applications requiring maximum electrical insulation when mated. The design, including a latch sleeve and a metal earthing crown, guarantees EMC screening efficiency to meet most requirements.

Technical Characteristics

Mechanical and Climatical

Characteristics	Value			Standard
	PEEK	PSU	PPSU	
Colour	natural (beige)	white or grey	cream	–
Endurance[1)]	> 5000 cycles	> 5000 cycles	> 5000 cycles	IEC 60512-5 test 9a
Humidity	up to 95% at 60° C			–
Temperature range	- 50° C/+ 250° C	- 50° C/+ 150° C	- 50° C/+ 180° C	–
Sterilization resistance[2)]	> 200 cycles	~20 cycles	> 100 cycles	IEC 60601-1 § 44.7
Resistance to solvents	very good	limited	good	–

Note: [1)] see page 189, contact resistance after mating cycles. See page 185, mechanical endurance latching force. [2)] Steam sterilization.

FGG Straight plug, key (G or J), cable collet, PEEK outer shell

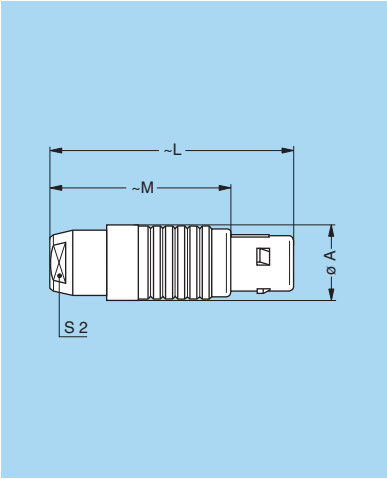

Reference		Dimensions (mm)			
Model	Series	A	L	M	S2
FGG	**0B**	11.0	37.4	27.4	8
FGG	**1B**	13.5	43.0	32.0	10
FGG	**3B**	19.0	62.0	47.0	15
FGG	**4B**	26.0	78.5	60.5	20

M1 Cable assembly (page 169)

FGG Straight plug, key (G or J), cable collet, PEEK outer shell and nut for fitting a bend relief [1)]

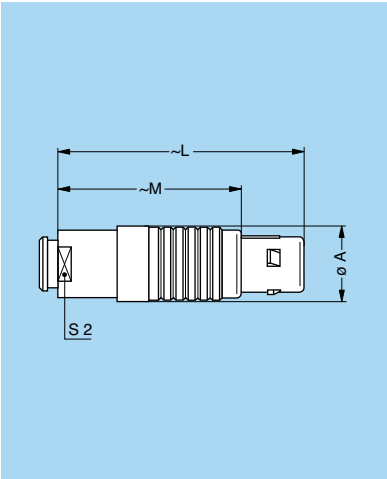

Reference		Dimensions (mm)				Note on availability
Model	Series	A	L	M	S2	
FGG	**1B**	13.5	42.2	31.2	10	for all collet type
FGG	**4B**	26.0	83.2	65.2	20	only from collet M82 and up

M1 Cable assembly (page 169)

Note: [1)] to order, add a «Z» at the end of the reference.
The bend relief must be ordered separately (see page 145).

FGY Straight plug, keys (Y), cable collet and PSU or PPSU outer shell

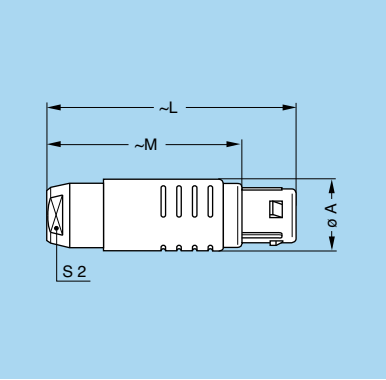

Reference		Dimensions (mm)			
Model	Series	A	L	M	S2
FGY	**2B**	16.5	50.5	39.5	13
FGY	**3B**	19.0	58.0	43.0	15
FGY	**4B**	26.0	76.2	58.2	20

M1 Cable assembly (page 169)

FGY Straight plug, keys (Y), cable collet and PSU or PPSU outer shell and nut for fitting a bend relief [1)]

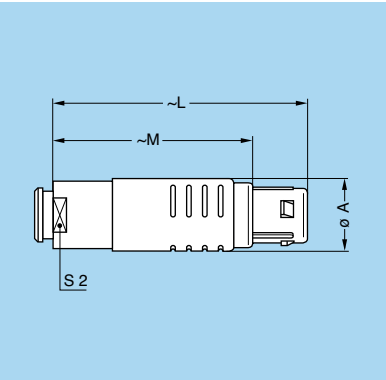

Reference		Dimensions (mm)				Note on availability
Model	Series	A	L	M	S2	
FGY	**2B**	16.5	49.5	38.5	13	only for collet M42 and up
FGY	**3B**	19.0	56.5	41.5	15	only for collet D62 and up
FGY	**4B**	26.0	74.4	56.4	20	only for collet D82 and up

M1 Cable assembly (page 169)

Note: [1)] to order, add a «Z» at the end of the reference.
The bend relief must be ordered separately (see page 145).

ENG Fixed socket with earthing tag, nut fixing, key (G or J), PEEK outer shell

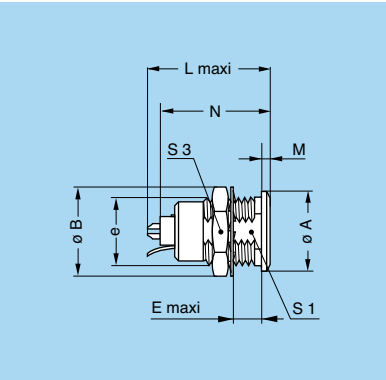

Reference		Dimensions (mm)								
Model	Series	A	B	e	E	L	M	N[1)]	S1	S3
ENG	**0B**	11	12.5	M9x0.6	6.4	20.7	1.8	16.5	8.2	11
ENG	**1B**	14	15.8	M12x1.0	7.5	23.0	1.5	21.1	10.5	14
ENG	**3B**	22	25.0	M18x1.0	11.5	30.7	2.0	28.1	16.5	22
ENG	**4B**	28	34.0	M25x1.0	12.0	35.7	2.5	32.6	23.5	30

P1 Panel cut-out (page 157)

Note: [1)] maximum length with crimp contacts.

ENY Fixed socket with earthing tag, nut fixing, keys (Y), PSU or PPSU outer shell

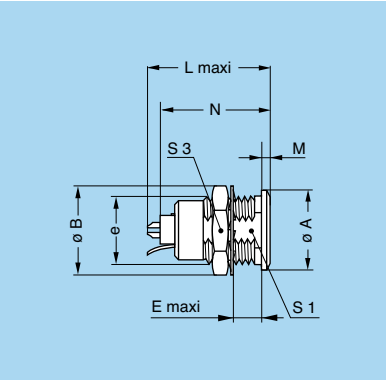

Reference		Dimensions (mm)								
Model	Series	A	B	e	E	L	M	N[1)]	S1	S3
ENY	**2B**	18	19.2	M15x1.0	8.5	26.7	1.8	24.6	13.5	17
ENY	**3B**	22	25.0	M18x1.0	11.5	30.7	2.0	28.1	16.5	22
ENY	**4B**	28	34.0	M25x1.0	12.0	35.7	2.5	32.6	23.5	30

P1 Panel cut-out (page 157)

Note: [1)] maximum length with crimp contacts.

Other models with plastic outer shell are available on request.

Watertight or vacuumtight models

These plug, socket and coupler models allow the device on which they are fitted to reach a protection index of IP68 as per IEC 60529. They are fully compatible with plugs of the same series and are widely used for portable radios, military, laboratory equipment, aviation, etc.
These models are identified by a letter «P» at the end of the reference.
Most of these models are also available in a vacuumtight version. Such models are identified by an additional letter «V» at the end of the part number (certificate on request).
Epoxy resin is used to seal these models.

Technical Characteristics

Mechanical and Climatical

Characteristics		Value	Standard
Endurance[1)]		> 5000 cycles	IEC 60512-5 test 9a
Humidity		up to 95% at 60° C	
Temperature range	00 to 1B	- 20° C/+ 100° C	
	2B to 5B	- 20° C/+ 80° C	
Salt spray corrosion test[4)]		> 1000h	IEC 60512-6 test 11f
Climatical category		20/80/21	IEC 60068-1
Leakage rate (He)[2)]		< 10^{-7} mbar.l.s^{-1}	IEC 60512-7 test 14b

Characteristics		Value	Standard
Maximum operating pressure[3)]	00	60 bar	IEC 60512-7 test 14d
	0B	60 bar	IEC 60512-7 test 14d
	1B	60 bar	IEC 60512-7 test 14d
	2B	40 bar	IEC 60512-7 test 14d
	3B	30 bar	IEC 60512-7 test 14d
	4B	15 bar	IEC 60512-7 test 14d
	5B	5 bar	IEC 60512-7 test 14d

Note: 1) see page 189, contact resistance after mating cycles. See page 185, mechanical endurance latching force.
2) only for vacuumtight models. Residual traces of grease used during (He) leak testing are on the o-ring. Please contact us for further details.
3) this value corresponds to the maximum allowed pressure difference for the assembled socket. 4) for chrome plated product (« C » material code).

YHG Fixed plug, nut fixing, non-latching, key (G) or keys (A…M)

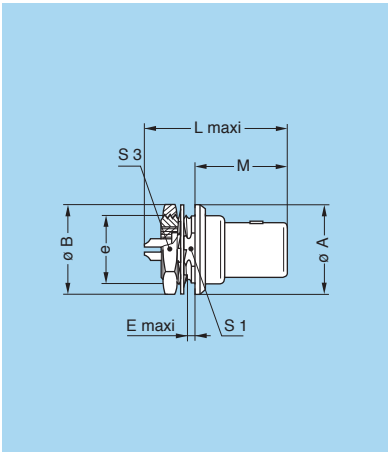

Reference		Dimensions (mm)							
Model	Series	A	B	e	E	L	M	S1	S3
YHG	**0B**	13	12.4	M9x0.6	2.4	24.1	14.2	8.2	11
YHG	**1B**	16	15.8	M12x1.0	3.9	28.0	16.2	10.5	14
YHG	**2B**	19	19.2	M15x1.0	5.5	33.1	17.8	13.5	17
YHG	**3B**	22	25.0	M18x1.0	5.1	38.2	22.2	16.5	22

P9 Panel cut-out (page 157)

Note: this model does not include an O-ring behind the flange, it ensures only IP61 protection index. Consequently, it is not vacuumtight. Watertightness (when mated) is only ensured with HHG and HCG sockets.

HGG Fixed socket, nut fixing, key (G) or keys (A…M and R), watertight or vacuumtight

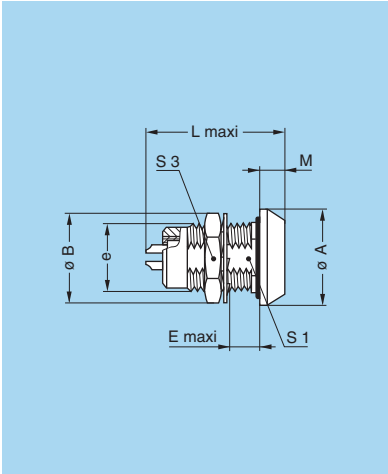

Reference		Dimensions (mm)							
Model	Series	A	B	e	E	L	M	S1	S3
HGG	**00**	11	10.2	M7x0.5	8.0	18.0	1.5	–	9
HGG	**0B**	13	12.4	M9x0.6	7.0	21.5	3.0	8.2	11
HGG	**1B**	18	15.8	M12x1.0	7.0	26.6	4.5	10.5	14
HGG	**2B**	20	19.2	M15x1.0	8.0	31.6	4.0	13.5	17
HGG	**3B**	25	25.0	M18x1.0	11.5	36.1	4.0	16.5	22
HGG	**4B**	34	34.0	M25x1.0	11.0	43.1	4.0	23.5	30
HGG	**5B**	45	40.0	M35x1.0	11.0	53.6	5.0	33.5	–

P9 Panel cut-out (page 157)

Note: the 5B series is delivered with a tapered washer and a round nut.

HNG Fixed socket, nut fixing, with earthing tag, key (G) or keys (A…M), watertight or vacuumtight

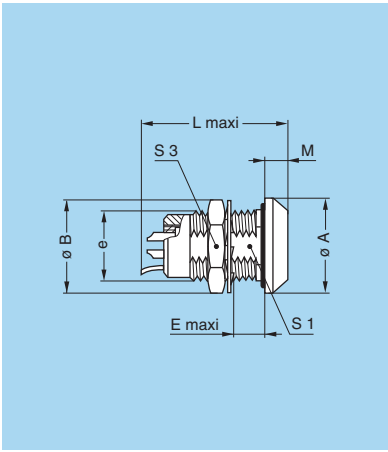

Reference		Dimensions (mm)							
Model	Series	A	B	e	E	L	M	S1	S3
HNG	**0B**	13	12.4	M9x0.6	7	21.5	3	8.2	11

P9 Panel cut-out (page 157)

HHG Fixed socket, nut fixing, key (G) or keys (A…M), watertight or vacuumtight (watertight when mated)

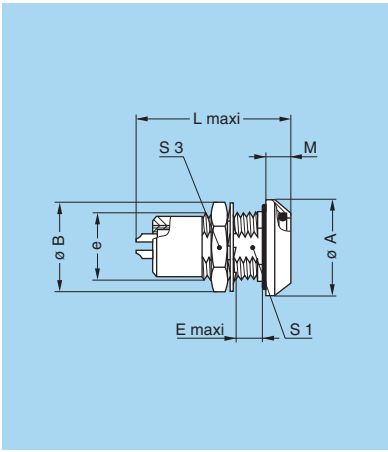

Reference		Dimensions (mm)							
Model	Series	A	B	e	E	L	M	S1	S3
HHG	**0B**	13	12.4	M9x0.6	7.0	24.5	4.8	8.2	11
HHG	**1B**	18	15.8	M12x1.0	7.0	30.3	5.2	10.5	14
HHG	**2B**	22	19.2	M15x1.0	8.0	35.6	6.0	13.5	17
HHG	**3B**	25	25.0	M18x1.0	11.5	41.3	7.2	16.5	22

P9 Panel cut-out (page 157)

Note: this model ensures watertightness (IP66) in the mating area when mated with FGG or similar plug.

HCG Fixed socket, nut fixing, key (G) or keys (A…M), watertight or vacuumtight (watertight when mated) (back panel mounting)

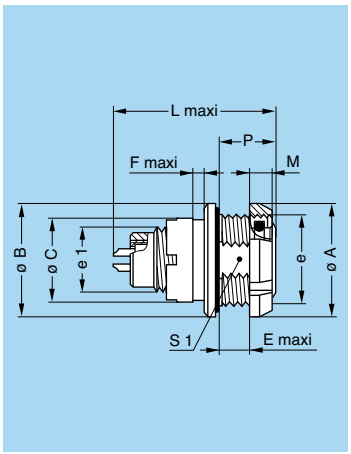

Reference		Dimensions (mm)										
Model	Series	A	B	C	e	e1	E	F	L	M	P	S1
HCG	0B	18	18	12.0	M14x1.0	M9x0.6	3.9	1.0	24.5	3.5	7.5	12.5
HCG	1B	20	20	14.5	M16x1.0	M12x1.0	6.2	2.0	30.3	3.5	10.0	14.5
HCG	2B	24	24	17.5	M19x1.0	M14x1.0	6.7	1.5	35.6	3.5	11.3	17.0

P3 Panel cut-out (page 157)

Note: this model ensures watertightness (IP66) in the mating area when mated with FGG or similar plug.

HEG Fixed socket, nut fixing, key (G) or keys (A…M), watertight or vacuumtight (back panel mounting)

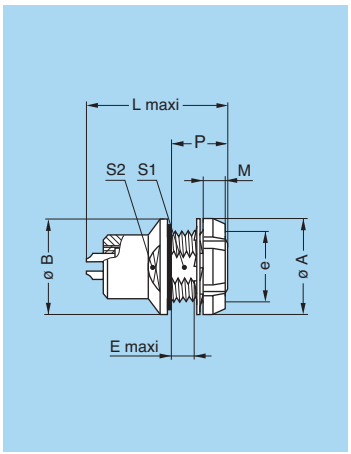

Reference		Dimensions (mm)								
Model	Series	A	B	e	E	L	M	P	S1	S2
HEG	00	10	11	M7x0.5	2.5	18.2	2.5	6.0	6.3	–
HEG	0B	12	13	M9x0.6	5.5	21.5	2.5	9.0	8.2	–
HEG	1B	16	18	M12x1.0	6.5	26.6	3.5	11.0	10.5	–
HEG	2B	20	20	M15x1.0	5.0	31.6	3.5	9.6	13.5	15

P9 Panel cut-out (page 157)

HMG Fixed socket with earthing tag, nut fixing, key (G) or keys (A…M), watertight or vacuumtight (back panel mounting)

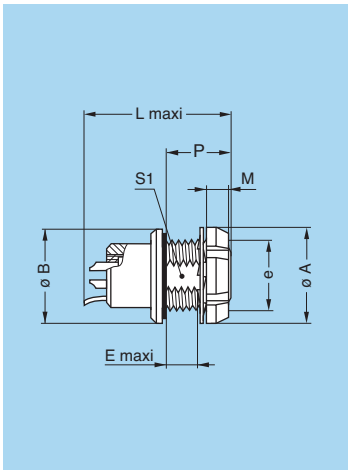

Reference		Dimensions (mm)							
Model	Series	A	B	e	E	L	M	P	S1
HMG	00	10	11	M7x0.5	2.5	18.0	2.5	6.0	6.3
HMG	0B	12	13	M9x0.6	5.5	21.5	2.5	9.0	8.2
HMG	1B	16	18	M12x1.0	5.5	26.6	3.5	11.0	10.5
HMG	2B[1)]	20	20	M15x1.0	5.5	31.6	3.5	9.6	13.5
HMG	3B	24	25	M18x1.0	7.5	36.1	4.5	14.0	16.5

P9 Panel cut-out (page 157)

Note: [1)] the surface design of the 2B series is different.

Note: The 3B series is delivered with a conical nut and without washer.

S●● Fixed coupler, nut fixing, key (G) or keys (A, B, J, K and L) at the flange end and key (G) or keys (A, B, J, K and L) at the other end, watertight or vacuumtight

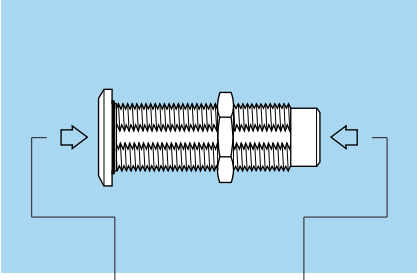

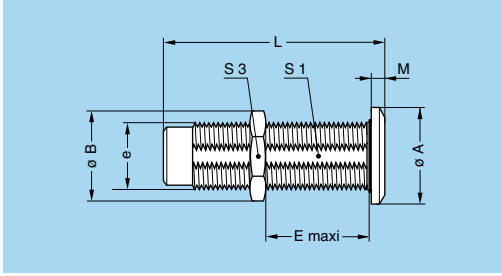

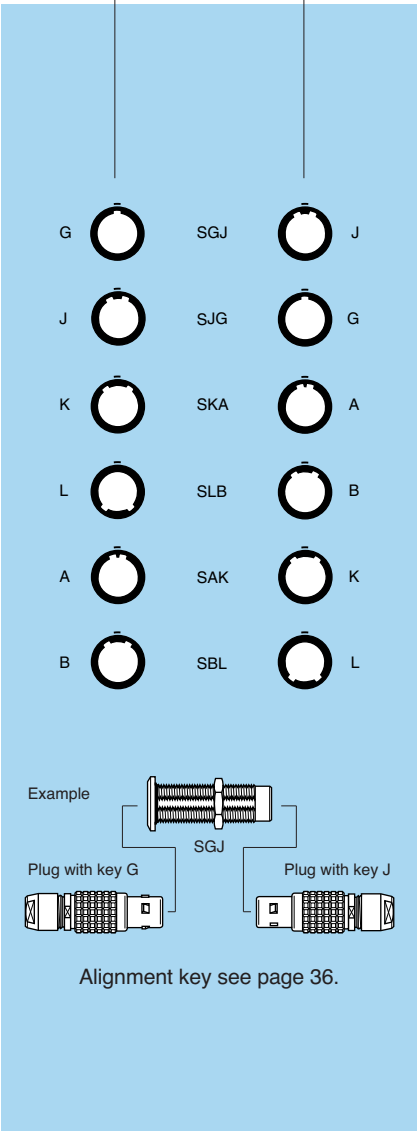

Alignment key see page 36.

Reference		Contacts	Dimensions (mm)							
Model	Series	Type	A	B	e	E	L	M	S1	S3
SGJ	**0B**	female – male	14	13.8	M10x0.75	17	34	2.0	9.0	12
SJG	**0B**	male – female	14	13.8	M10x0.75	17	34	2.0	9.0	12
SGJ	**1B**	female – male	17	15.8	M12x1.00	28	39	2.5	10.5	14
SJG	**1B**	male – female	17	15.8	M12x1.00	28	39	2.5	10.5	14
SGJ	**2B**	female – male	20	21.5	M16x1.00	25	44	4.0	15.0	19
SJG	**2B**	male – female	20	21.5	M16x1.00	25	44	4.0	15.0	19
SGJ	**3B**	female – male	25	27.0	M20x1.00	30	53	4.0	18.5	24
SJG	**3B**	male – female	25	27.0	M20x1.00	30	53	4.0	18.5	24
SAK	**3B**	female – male	25	27.0	M20x1.00	30	53	4.0	18.5	24
SBL	**3B**	female – male	25	27.0	M20x1.00	30	53	4.0	18.5	24
SAK	**4B**	female – male	34	34.0	M25x1.00	50	65	4.0	23.5	30
SBL	**4B**	female – male	34	34.0	M25x1.00	50	65	4.0	23.5	30
SGJ	**4B**	female – male	34	34.0	M25x1.00	50	65	4.0	23.5	30
SJG	**4B**	male – female	34	34.0	M25x1.00	50	65	4.0	23.5	30
SGJ	**5B**	female – male	45	40.0	M35x1.00	58	80	5.0	33.5	–
SJG	**5B**	male – female	45	40.0	M35x1.00	58	80	5.0	33.5	–
SKA	**5B**	male – female	45	40.0	M35x1.00	58	80	5.0	33.5	–
SLB	**5B**	male – female	45	40.0	M35x1.00	58	80	5.0	33.5	–
SAK	**5B**	female – male	45	40.0	M35x1.00	58	80	5.0	33.5	–
SBL	**5B**	female – male	45	40.0	M35x1.00	58	80	5.0	33.5	–

P4 Panel cut-out (page 157)

P9 Panel cut-out 1B series (page 157)

Note: The 5B series is delivered with a round nut.

Note: for this fixed coupler, the first contact type mentioned is always the one at the flange end. On request these couplers can be produced in other series, with other keys.

Bridge models

Technical Characteristics

Mechanical and Climatical

Characteristics	Value	Standard
Endurance[1)]	> 1000 cycles	IEC 60512-5 test 9a
Working temperature	maximum 90° C	

Note: [1)] see page 189, contact resistance after mating cycles. See page 185, mechanical endurance latching force.

Materials and Treatment

Component	Material	Surface treat. (μm)			
		Cu	Ni	Cr	Au
Plastic housing	Polyamide	–			
Metallic parts	Brass	0.5	3	–	–
	Brass	0.5	3	0.3	–
Insulator	PEEK	–			
Male contact	Brass	0.5	3	–	1.0
Female contact	Bronze	0.5	3	–	1.5

Note: the surface treatment standards are as follows:
– Nickel: SAE AMS QQ N 290, chrome: SAE AMS 2460, gold: ISO 27874

Note: the last letter of the part number indicates the colour of the housing. Ex. G (standard) is grey. To obtain another colour, replace this letter by the letter corresponding to the selected colour (see table on page 72).

Electrical

Characteristics	Value	Standard
Contact resistance	< 6 mΩ	IEC 60512-2 test 2a

Part number	Series	Audio-Mono	Audio-Stereo	Test voltage (kV rms) [1)2)]	Rated current (A)
CFF.0B.302.PLCG	0B	●	–	1.05	4
CRG.0B.302.PLEG	0B	●	–	1.05	4
CFF.0B.303.PLCG	0B	●	–	0.80	4
CRG.0B.303.PLEG	0B	●	–	0.80	4
CRG.0B.306.PLEG	0B	–	●	0.40	2
CFF.1B.303.PLCG	1B	●	–	1.25	5
CRG.1B.303.PLEG	1B	●	–	1.25	5
CFF.1B.306.PLCG	1B	–	●	0.80	3
CRG.1B.306.PLEG	1B	–	●	0.80	3

Note:
[1)] see calculation method, caution and suggested standard on page 190.
[2)] lowest measured value; contact to contact or contact to shell.

CFF Bridge plug with two non-latching plugs

CRG Bridge plug with two non-latching plugs, and monitoring socket, key (G) or keys (A…M)

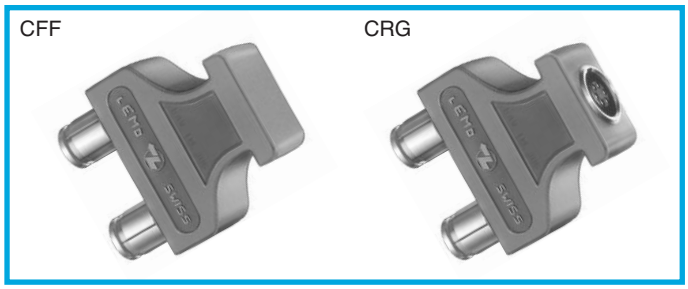

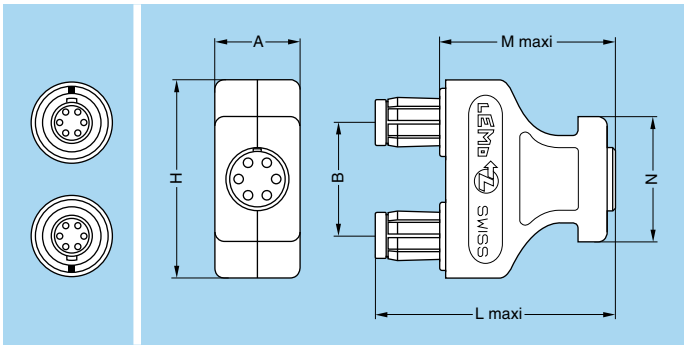

Model	Series	Dimensions (mm)					
		A	B	H	L	M	N
CFF-CRG	**0B**	13.5	14	27.5	37.2	27.2	22.5
CFF-CRG	**1B**	15.0	20	35.0	42.0	31.0	22.0

Note: in order to provide the user with a coding system, the bridge plug housing, the double panel washers and the bend reliefs are available in nine colours.

Threaded-latching models

FVG Straight plug, key (G) or keys (B), cable collet

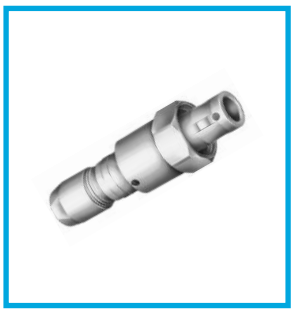

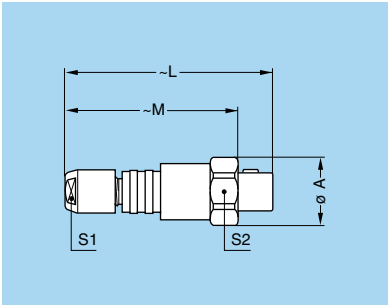

Reference		Dimensions (mm)				
Model	Series	A	L	M	S1	S2
FVG	**00**	9	28.5	24	5	8

Note: to be ordered with nut for fitting a bend relief to obtain the rating IP 64.

ESG Fixed socket with two round nuts, key (G) or keys (B), long threaded shell (back panel mounting)

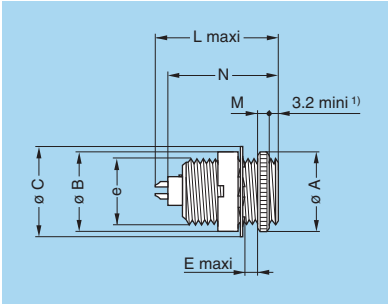

Reference		Dimensions (mm)							
Model	Series	A	B	C	e	E	L	M	N
ESG	**00**	9	9	9.5	M7x0.5	3.2	15.5	2	13.7

P2 Panel cut-out (page 157)

Note: 1) minimum length of free thread to ensure mating.

FVB Straight plug, keys (B), short shell for special cable crimping and for fitting a bend relief

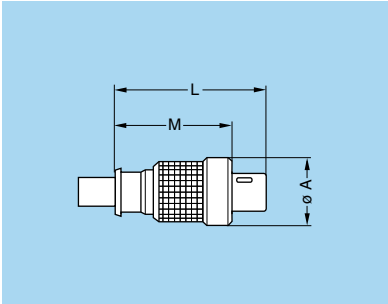

Reference		Dimensions (mm)		
Model	Series	A	L	M
FVB	**00**	9	20	15.4

Note: part number for microphone applications: FVB.00.303.NLAE24. After assembly the special bend relief GMF.00.018.D● (to be ordered separately) is to be fitted.

XRB Elbow (90°) socket for printed circuit, keys (B), short shell with one nut, screw fixing (back panel mounting)

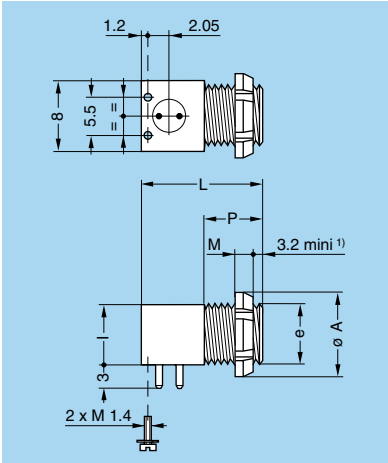

Reference		Dimensions (mm)					
Model	Series	A	e	I	L	M	P
XRB	**00**	10	M7x0.5	7	14	2.5	7

P2 Panel cut-out (page 157)

P18 PCB drilling pattern for contact only (page 165)

Note: 1) minimum length of free thread to ensure mating.

Alignment Key (B series)

Alignment Key and Polarized Keying System

B series connector model part numbers are composed of three letters. The LAST LETTER indicates the key position and the contact type (male or female).

Front view of a socket

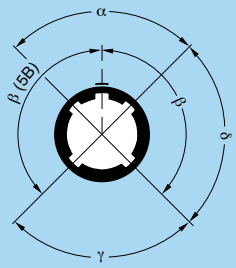

Ref.	Nb of keys	Angles	Series 00	Series 0B	Series 1B	Ref.	Nb of keys	Angles	Series XB	Series 2B	Series 3B	Series 4B	Series 5B	Contact type Plug	Contact type Socket	Note
G	1	–	0°	0°	0°	G	1	–	0°	0°	0°	0°	0°	male	female	●
A	2	α	30°	30°	30°	A	2	α	30°	30°	30°	30°	30°	male	female	●
B	2	α	60°	60°	60°	B	2	α	–	45°	45°	45°	45°	male	female	●
C	2	α	–	90°	90°	C	2	α	–	60°	60°	60°	60°	male	female	●
D	2	β	–	135°	135°	D	2	γ	–	95°	95°	95°	95°	male	female	○
E	2	β	–	145°	145°	E	2	β	120°	120°	120°	120°	120°	male	female	○
F	2	β	–	155°	155°	F	2	β	–	145°	145°	145°	145°	male	female	○
J	2	γ	45°	45°	45°	J	2	α	–	37.5°	37.5°	37.5°	37.5°	female	male	●
K	2	γ	–	70°	70°	K	2	α	–	52.5°	52.5°	52.5°	52.5°	female	male	○
L	2	γ	–	80°	80°	L	2	γ	–	70°	70°	70°	70°	female	male	○
M	2	δ	–	110°	–	M	2	–	–	–	–	–	–	female	male	○
Y	3	–	–	–	–	Y	3	β	–	112.5°	126°	112.5°	–	male	female	●[1)]
	3	–	–	–	–		3	γ	–	100°	102°	147.5°	–	male	female	●[1)]

Front view of a socket

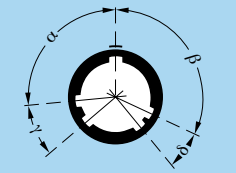

Ref.	Nb of keys	Angles	Series 00	Series 0B	Series 1B	Ref.	Nb of keys	Angles	Series XB	Series 2B	Series 3B	Series 4B	Series 5B	Contact type Plug	Contact type Socket	Note
R	5	α	–	–	–	R	5	α	–	–	–	–	95°	male	female	●
	5	β	–	–	–		5	β	–	–	–	–	115°	male	female	●
	5	γ	–	–	–		5	γ	–	–	–	–	20°	male	female	●
	5	δ	–	–	–		5	δ	–	–	–	–	30°	male	female	●

Note: FTG, FGY, ENY models are not available with all the keys. Please consult pages corresponding to these models.
For R●● models see explanation on page 24 and for S●● models see explanation on page 33.

Note: 1) only FGY and ENY models are available.

● First choice alternative
○ Special order alternative

K Series

K series connectors have been specifically designed for outdoor applications.They include an inner sleeve and two seals to prevent penetration of solids or liquids into the housing formed by the plug, free socket, fixed socket or coupler. All models (except FX● model) of this series are watertight when mated to give a protection index of IP68 as per IEC 60529 standard (in mated condition) when correctly assembled to an appropriate cable (IP66 otherwise).
K series connectors have the same insulators as the B series and have the following main features:

- security of the Push-Pull latching system
- multipole types 2 to 64 contacts
- keying system («G» key standard) for connector alignment
- 360° screening for full EMC shielding
- rugged housing for extreme working conditions.
- watertight connection (IP 68/IP 66)
- solder, crimp or print (straight or elbow) contacts
- multiple key options to avoid cross mating of similar connectors
- high packing density for space savings

Metal housing models (page 39)

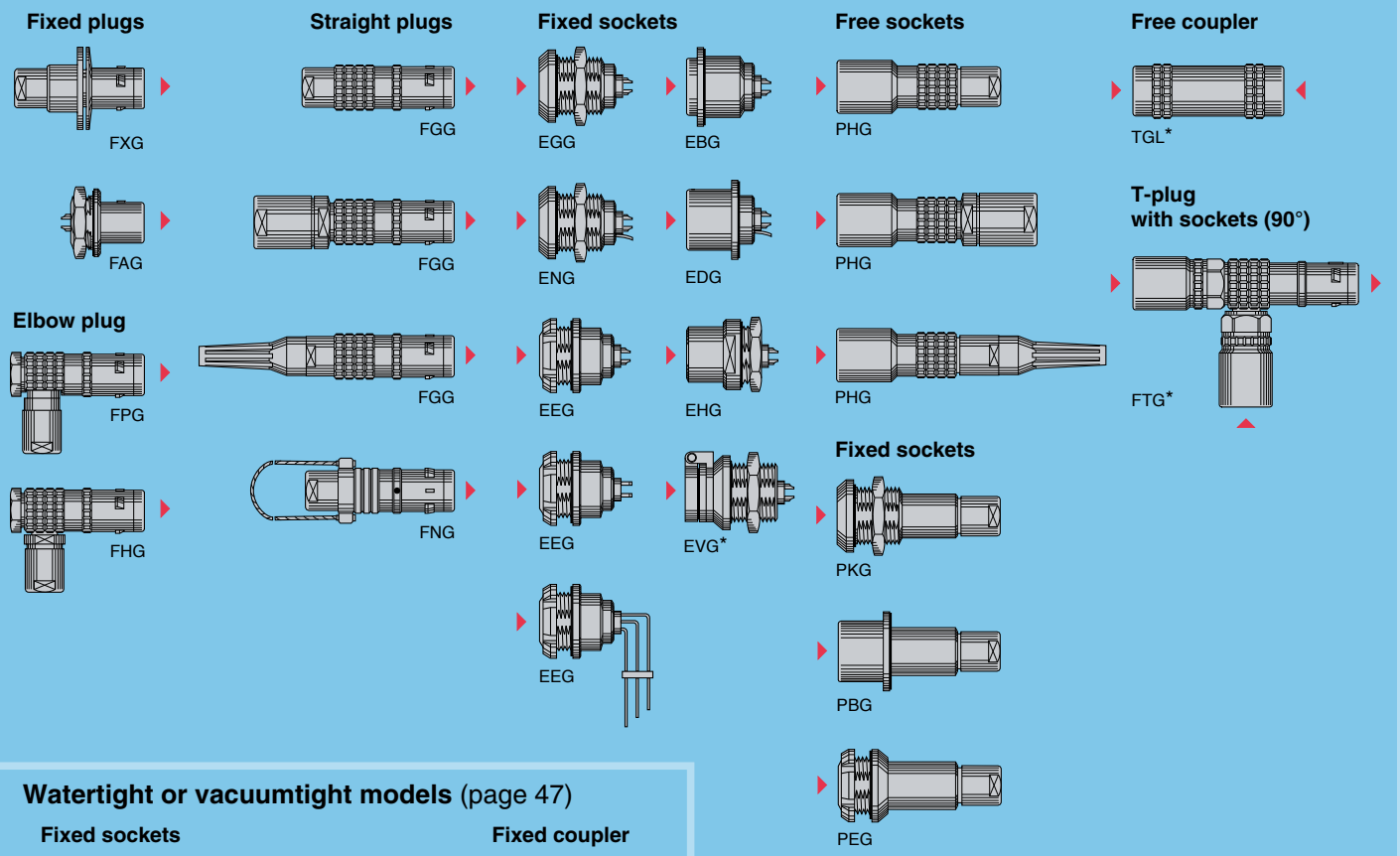

Watertight or vacuumtight models (page 47)

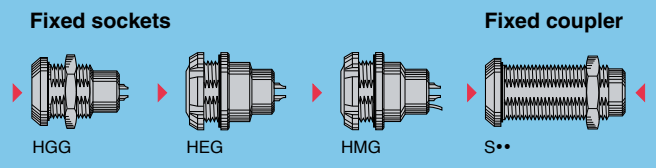

Note: * Contact LEMO for details.

Part Numbering System

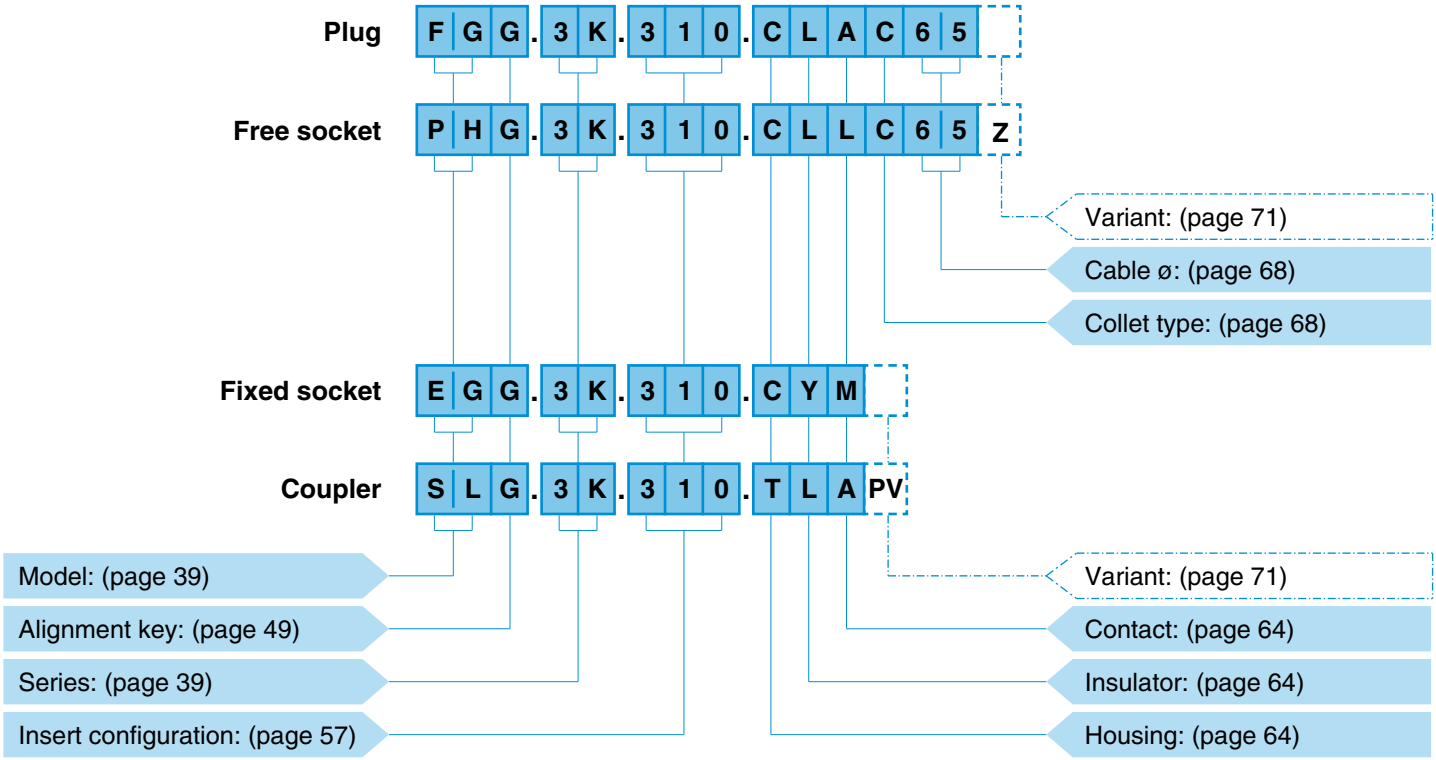

FGG.3K.310.CLAC65 = straight plug with key (G) and cable collet, 3K series, multipole type with 10 contacts, outer shell in chrome-plated brass, PEEK insulator, male solder contacts, C type collet for 6.5 mm diameter cable.

PHG.3K.310.CLLC65Z = free socket with key (G) and cable collet, 3K series, multipole type with 10 contacts, outer shell in chrome-plated brass, PEEK insulator, female solder contacts, C type collet for 6.5 mm diameter cable and nut for fitting a bend relief.

EGG.3K.310.CYM = fixed socket, nut fixing, with key (G), 3K series, multipole type with 10 contacts, outer shell in chrome-plated brass, PEEK extended insulator, female crimp contacts.

SLG.3K.310.TLAPV = fixed coupler, nut fixing, keys (L) on the flange end and key (G) at the other end, 3K series, multipole type with 10 contacts, outer shell in stainless steel, PEEK insulator, male-female contacts, vacuumtight.

Part Section Showing Internal Components

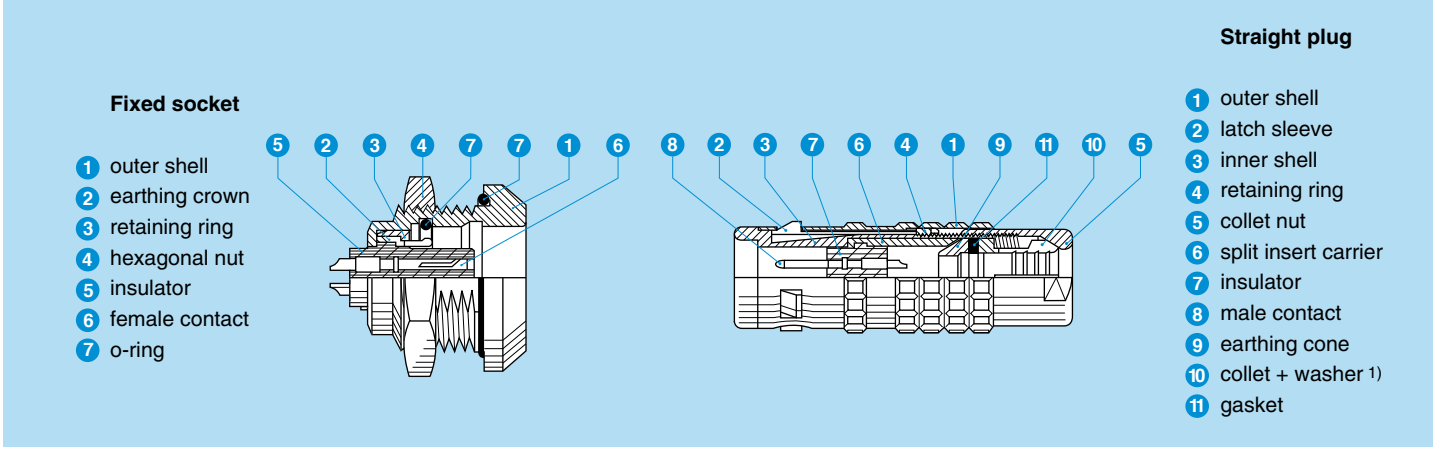

Note: 1) depending on models.

Metal housing models

Technical Characteristics

Mechanical and Climatical

Characteristics	Value	Standard
Endurance[1)]	> 5000 cycles	IEC 60512-5 test 9a
Humidity	up to 95% at 60° C	
Temperature range[2)]	- 55° C, + 200° C	
Resistance to vibrations	10-2000 Hz, 15g	IEC 60512-4 test 6d
Shock resistance	100 g, 6 ms	IEC 60512-4 test 6c
Salt spray corrosion test[4)]	> 1000h	IEC 60512-6 test 11f
Protection index (mated)[3) 5)]	IP 68/IP 66	IEC 60529
Climatical category	50/175/21	IEC 60068-1

Electrical

Characteristics		Value	Standard
Shielding efficiency	at 10 MHz	> 95 dB	IEC 60169-1-3
	at 1 GHz	> 80 dB	IEC 60169-1-3

Note:
the various tests have been carried out with FGG and EGG connector pairs, with chrome-plated brass shell, PEEK insulator and silicone O-ring. Detailed electrical characteristics, as well as materials and treatment are presented in the chapter Technical Characteristics on page 182.

1) see page 189, contact resistance after mating cycles. See page 185, mechanical endurance latching force.
2) minimum operating temperature is -20°C for sockets fitted with an FPM (Viton®) O-ring.
3) IP68 achieved providing that the cable is perfectly circular and that assembly process ensures a high integrity seal.
4) for chrome plated product (« C » material code).
5) except FX● model.

FGG Straight plug, key (G) or keys (A to F, L and R), cable collet

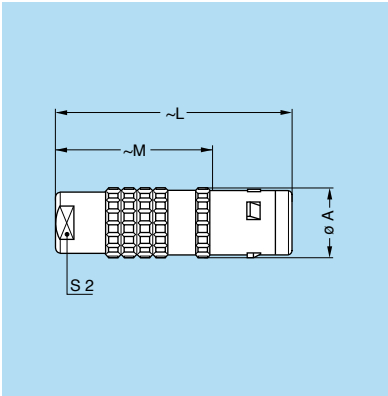

Reference		Dimensions (mm)			
Model	Series	A	L	M	S2
FGG	0K	11	34	23.0	8
FGG	1K	13	42	28.0	9
FGG	2K	16	52	36.0	12
FGG	3K	19	61	41.0	15
FGG	4K	25	71	50.5	19
FGG	5K	38	92	67.0	30

M1 Cable assembly (page 172)

FGG Straight plug, key (G) or keys (A to F, L and R), cable collet and oversize cable collet [1)]

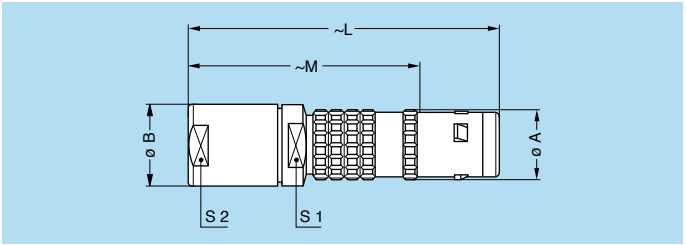

Reference		Dimensions (mm)					
Model	Series	A	B	L	M	S1	S2
FGG	1K	13	14.5	60.0	46	12	12
FGG	2K	16	17.0	68.0	52	15	15
FGG	3K	19	22.0	85.0	65	19	19
FGG	4K	25	36.0	119.5	99	30	32

M2 Cable assembly (page 173)

Note: 1) correspond to K type of collet, the fitting of oversize collets onto this model allows them to be fitted to the cables that can be accommodated by the next housing size up (see page 68).

FGG Straight plug, key (G) or keys (A to F, L and R),cable collet and nut for fitting a bend relief [1)]

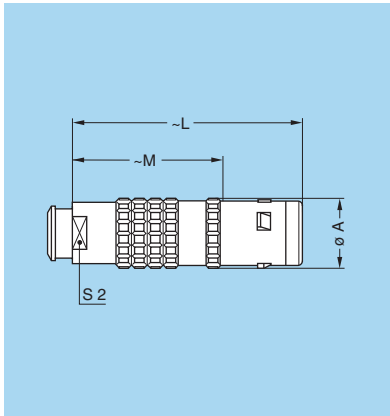

Reference		Dimensions (mm)			
Model	Series	A	L	M	S2
FGG	**0K**	11	34	23.0	7
FGG	**1K**	13	42	28.0	9
FGG	**2K**	16	52	36.0	12
FGG	**3K**	19	60	40.0	15
FGG	**4K**	25	71	50.5	19

M1 Cable assembly (page 172)

Note: [1)] to order, add a «Z» at the end of the reference.
The bend relief must be ordered separately (see page 145).

FNG Straight plug, key (G) or keys (A to F and L), cable collet and lanyard release

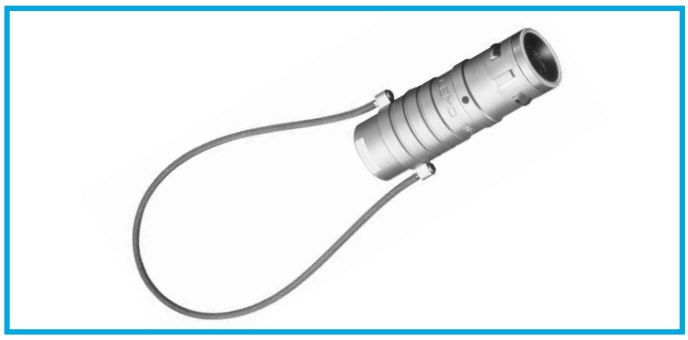

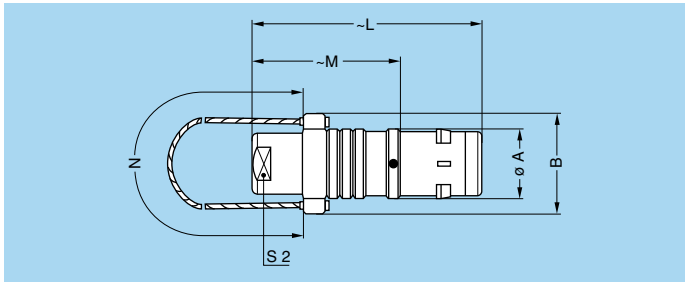

Reference		Dimensions (mm)					
Model	Series	A	B	L	M	N	S2
FNG	**2K**	16	22	52	36.0	160	12
FNG	**4K**	25	32	71	50.5	230	19

M1 Cable assembly (page 172)

Note: cable material: stainless steel with Polyamide sheath

FXG Fixed plug with round flange, key (G) or keys (A to F, L and R) and screw fixing

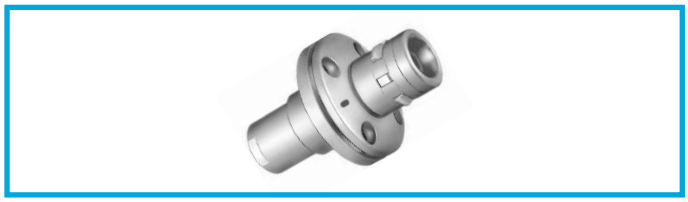

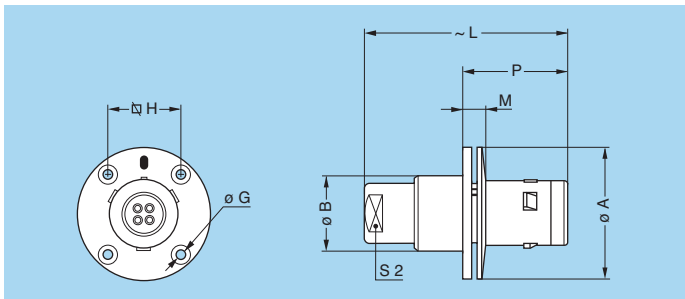

Reference		Dimensions (mm)							
Model	Series	A	B	G	H	L	M	P	S2
FXG	**3K**	38	22.5	3.4	20.6	61	10.0	30.0	15
FXG	**4K**	47	28.5	3.4	27.0	71	11.0	32.0	19
FXG	**5K**	65	42.5	4.4	38.0	100	12.5	38.5	30

P6 Panel cut-out (page 159)

Note: this model does not include an O-ring behind the flange, it allows the device on which it is fitted to reach only IP50 protection index.
It does not have a cable collet.

FAG Fixed plug, nut fixing, non-latching, key (G) or keys (A to F, L and R)

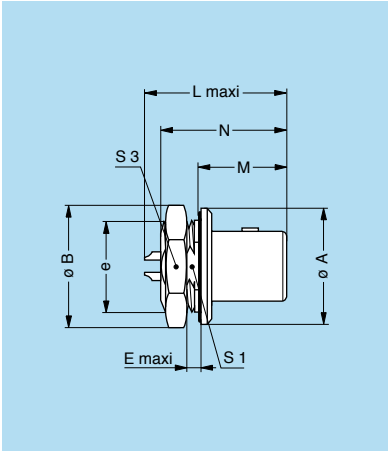

Reference		Dimensions (mm)								
Model	Series	A	B	e	E	L	M	N[1)]	S1	S3
FAG	**1K**	20	21.5	M16x1.0	2.3	22.6	16.0	22.5	14.5	19
FAG	**2K**	25	27.0	M20x1.0	4.5	33.6	18.0	28.3	18.5	24
FAG	**3K**	31	34.0	M24x1.0	4.0	34.3	22.5	33.8	22.5	30
FAG	**4K**	37	40.5	M30x1.0	4.0	35.3	23.0	36.3	28.5	36
FAG	**5K**	55	54.0	M45x1.5	4.0	43.5	28.5	42.3	42.5	–

P1 Panel cut-out (page 159)

Note: The 1K series is delivered with a locking washer.
The 5K series is delivered with a round nut.

Note: 1) maximum length with crimp contacts.

FPG Elbow (90°) plug, key (G) or keys (A to F, L and R), cable collet

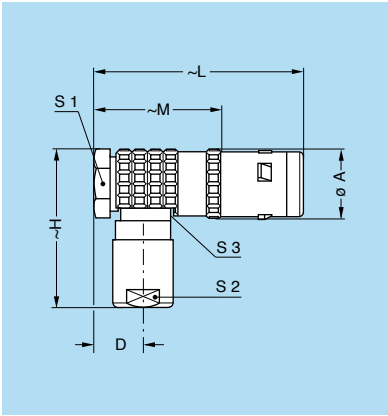

Reference		Dimensions (mm)							
Model	Series	A	D	H	L	M	S1	S2	S3
FPG	**0K**	11	7.3	25	36	25	9	8	8
FPG	**1K**	13	8.7	33	42	28	11	9	10
FPG	**2K**	16	10.2	40	51	35	14	12	13

M3 Cable assembly (page 172)

FHG Elbow (90°) plug, key (G) or keys (A to F, L and R), cable collet

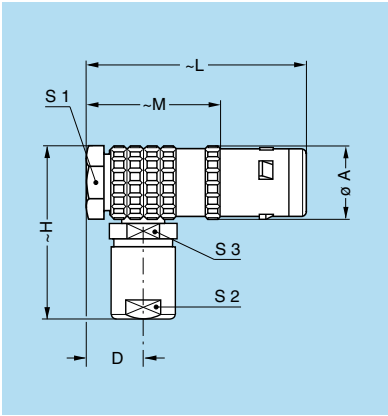

Reference		Dimensions (mm)							
Model	Series	A	D	H	L	M	S1	S2	S3
FHG	**3K**	21.0	11.5	47	60	40.0	18	15	16
FHG	**4K**	27.5	15.5	57	72	51.5	24	19	22

M3 Cable assembly (page 172)

EGG Fixed socket, nut fixing, key (G) or keys (A to F, L and R)

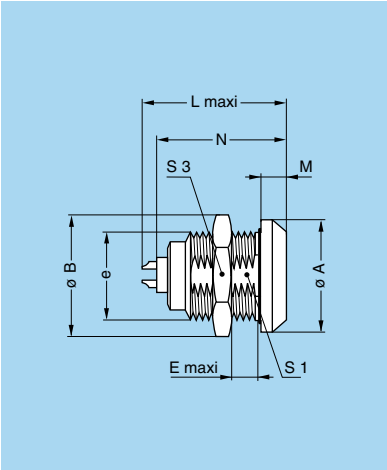

Reference		Dimensions (mm)								
Model	Series	A	B	e	E	L	M	N[1)]	S1	S3
EGG	**0K**	18	19.2	M14x1.0	6	21.7	4.0	20.1	12.5	17
EGG	**1K**	20	21.5	M16x1.0	9	27.0	4.5	25.1	14.5	19
EGG	**2K**	25	27.0	M20x1.0	9	30.7	5.0	28.6	18.5	24
EGG	**3K**	31	34.0	M24x1.0	11	36.2	6.0	33.6	22.5	30
EGG	**4K**	37	40.5	M30x1.0	9	40.2	6.5	38.6	28.5	36
EGG	**5K**	55	54.0	M45x1.5	10	47.5	9.0	43.6	42.5	–

P1 Panel cut-out (page 159)

Note: The 5K series is delivered with a round nut.

Note: [1)] maximum length with crimp contacts.

ENG Fixed socket, nut fixing, key (G) or keys (A to F, L and R) and earthing tag

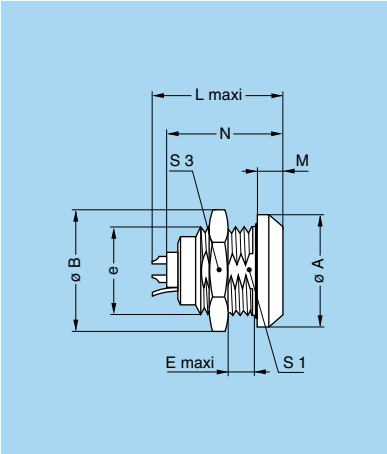

Reference		Dimensions (mm)								
Model	Series	A	B	e	E	L	M	N[1)]	S1	S3
ENG	**3K**	31	34	M24x1.0	11.3	36.2	6	33.6	22.5	30

P1 Panel cut-out (page 159)

Note: [1)] maximum length with crimp contacts.

EEG Fixed socket, nut fixing, key (G) or keys (A to F, L and R) (back panel mounting)

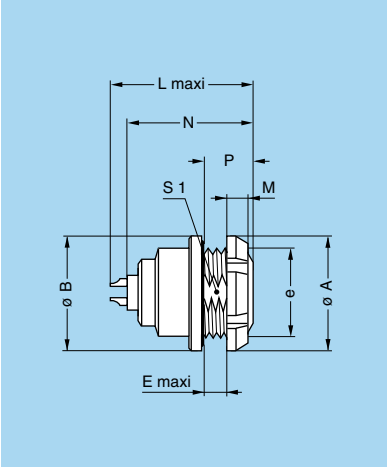

Reference		Dimensions (mm)								
Model	Series	A	B	e	E	L	M	N[1)]	P	S1
EEG	**0K**	18.0	18	M14x1.0	3.4	21.7	3.5	20.1	7.0	12.5
EEG	**1K**	20.0	20	M16x1.0	6.2	27.0	3.5	25.1	10.0	14.5
EEG	**2K**	25.0	25	M20x1.0	5.0	30.7	3.5	28.6	10.0	18.5
EEG	**3K**	30.0	31	M24x1.0	7.5	36.2	4.5	33.6	12.0	22.5
EEG	**4K**	41.5	37	M30x1.0	6.0	40.2	7.0	38.6	13.5	28.5

P1 Panel cut-out (page 159)

Note: The 3K and 4K series are delivered with a conical nut.

Note: [1)] maximum length with crimp contacts.

EEG Fixed socket, nut fixing, key (G) or keys (A to F and R) with straight print contacts for printed circuit (back panel mounting)

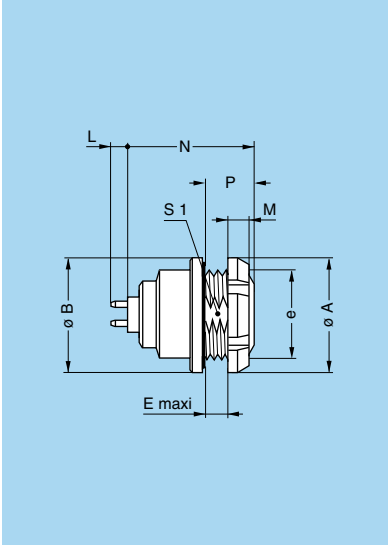

Reference		Dimensions (mm)							
Model	Series	A	B	e	E	M	N	P	S1
EEG	**0K**	18.0	18	M14x1.0	3.4	3.5	17.6	7.0	12.5
EEG	**1K**	20.0	20	M16x1.0	6.2	3.5	23.8	10.0	14.5
EEG	**2K**	25.0	25	M20x1.0	5.0	3.5	25.8	10.0	18.5
EEG	**3K**	30.0	31	M24x1.0	7.5	4.5	31.3	12.0	22.5
EEG	**4K**	41.5	37	M30x1.0	6.0	7.0	34.3	13.5	28.5

P1 Panel cut-out (page 159)

P15 PCB drilling pattern (page 160)

Note: The 3K and 4K series are delivered with a conical nut.

Note: this contact type is available for E●● socket models fitted with female contact.
Length «L» depends on the number of contacts, see table page 163.

EEG Fixed socket, nut fixing, key (G) or keys (A to F and R) with elbow (90°) contacts for printed circuit (back panel mounting)

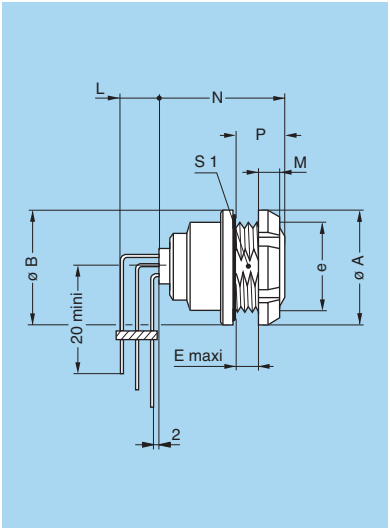

Reference		Dimensions (mm)							
Model	Series	A	B	e	E	M	N	P	S1
EEG	**0K**	18	18	M14x1.0	3.4	3.5	19.3	7	12.5
EEG	**1K**	20	20	M16x1.0	6.2	3.5	24.3	10	14.5
EEG	**2K**	25	25	M20x1.0	5.0	3.5	26.6	10	18.5
EEG	**3K**	30	31	M24x1.0	7.5	4.5	31.3	12	22.5

P1 Panel cut-out (page 159)

P17 PCB drilling pattern (page 164)

Note: length «L» depends on the number of contacts, see PCB drilling pattern page 164.

Note: The 3K series is delivered with a conical nut.

EBG Fixed socket with square flange, key (G) or keys (A to F, L and R) and screw fixing

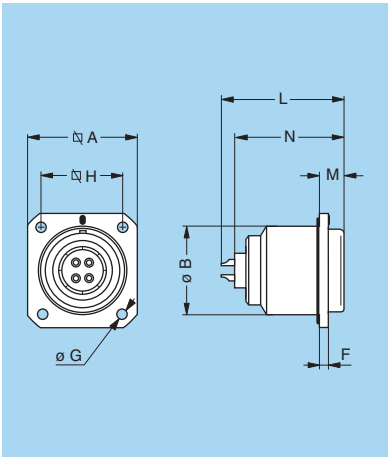

Reference		Dimensions (mm)							
Model	Series	A	B	F	G	H	L	M	N[1)]
EBG	**3K**	29	23	3	3.4	23	36.2	6.0	32.6
EBG	**4K**	37	30	3	3.4	29	40.2	6.5	36.6
EBG	**5K**	54	45	4	4.4	44	47.5	8.0	42.1

P7 Panel cut-out (page 159)

Note: [1)] maximum length with crimp contacts.

EDG Fixed socket with square flange, key (G) or keys (A to F, L and R), protruding shell and earthing tag, screw fixing

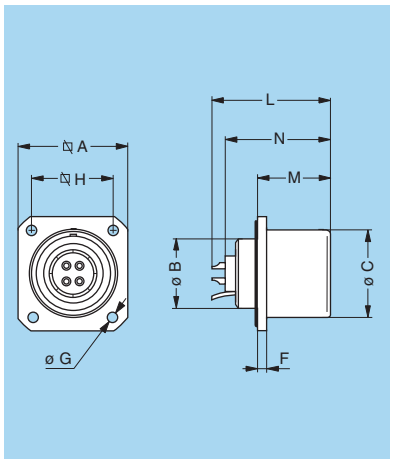

Reference		Dimensions (mm)								
Model	Series	A	B	C	F	G	H	L	M	N[1)]
EDG	**3K**	29	18	23	3	3.4	23	36.2	22.5	32.6

P7 Panel cut-out (page 159)

Note: 1) maximum length with crimp contacts.

EHG Fixed socket, nut fixing, key (G) or keys (A to F and L), protruding shell

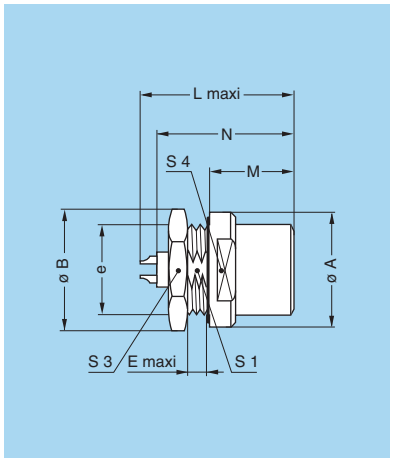

Reference		Dimensions (mm)									
Model	Series	A	B	e	E	L	M	N[1)]	S1	S3	S4
EHG	**0K**	18	19.2	M14x1.0	1.5	21.7	10.5	20.1	12.5	17	15
EHG	**1K**	20	21.5	M16x1.0	1.5	27.0	15.5	25.1	14.5	19	17
EHG	**2K**	25	27.0	M20x1.0	1.5	30.7	17.0	27.1	18.5	24	20

P1 Panel cut-out (page 159)

Note: 1) maximum length with crimp contacts.

PHG Free socket, key (G) or keys (A to F, L and R), cable collet

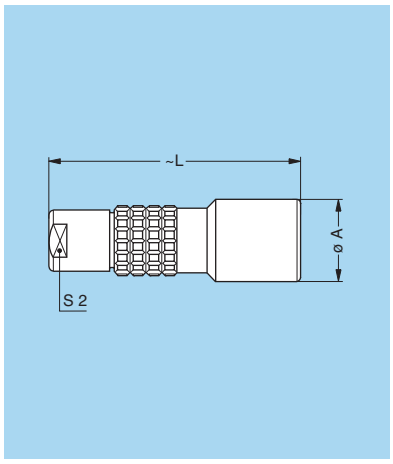

Reference		Dimensions (mm)		
Model	Series	A	L	S2
PHG	**0K**	13	34.0	8
PHG	**1K**	15	45.0	9
PHG	**2K**	19	54.0	12
PHG	**3K**	23	65.0	15
PHG	**4K**	29	75.5	19
PHG	**5K**	42	95.0	30

M1 Cable assembly (page 172)

PHG Free socket, key (G) or keys (A to F, L and R), cable collet and oversize cable collet [1)]

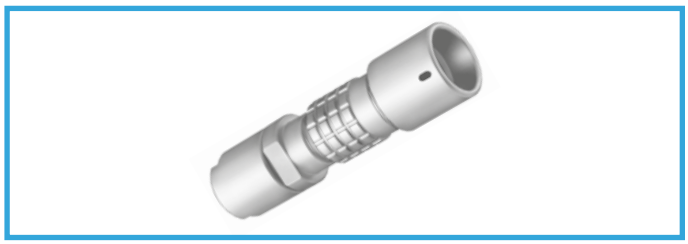

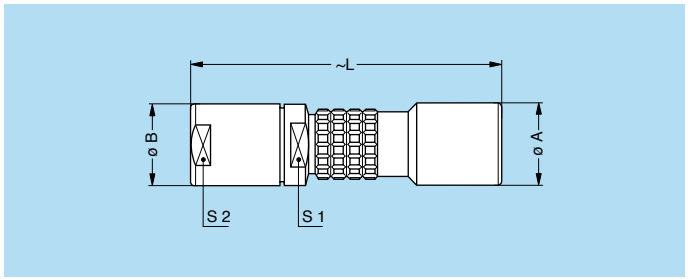

Reference		Dimensions (mm)				
Model	Series	A	B	L	S1	S2
PHG	**1K**	15	14.5	63	12	12
PHG	**2K**	19	17.0	70	15	15
PHG	**3K**	23	22.0	89	19	19
PHG	**4K**	29	36.0	124	30	32

M2 Cable assembly (page 173)

Note: [1)] correspond to K type of collet, the fitting of oversize collets onto this model allows them to be fitted to the cables that can be accommodated by the next housing size up (see page 68).

PHG Free socket, key (G) or keys (A to F, L and R), cable collet and nut for fitting a bend relief [1)]

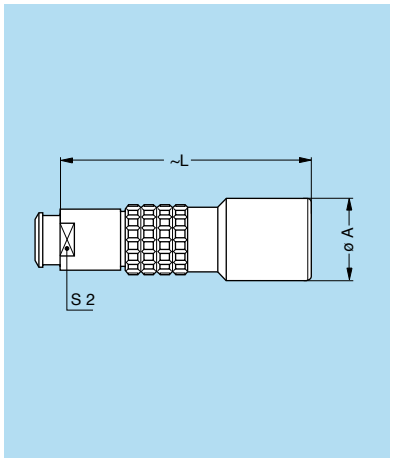

Reference		Dimensions (mm)		
Model	Series	A	L	S2
PHG	**0K**	13	34.0	7
PHG	**1K**	15	45.0	9
PHG	**2K**	19	54.0	12
PHG	**3K**	23	64.0	15
PHG	**4K**	29	75.5	19

M1 Cable assembly (page 172)

Note: [1)] to order, add a «Z» at the end of the reference.
The bend relief must be ordered separately (see page 145).

PKG Fixed socket, nut fixing, key (G) or keys (A to F, L and R), cable collet

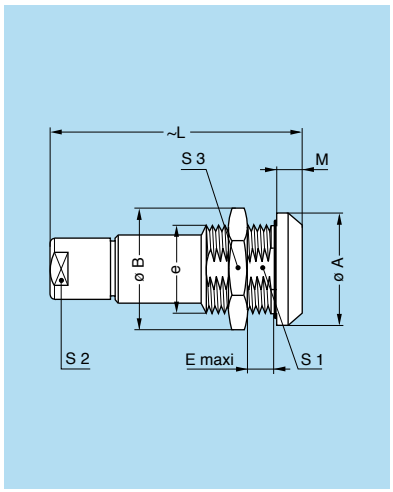

Reference		Dimensions (mm)								
Model	Series	A	B	e	E	L	M	S1	S2	S3
PKG	**0K**	18	19.2	M14x1.0	9.0	35.2	4.0	12.5	8	17
PKG	**1K**	20	21.5	M16x1.0	9.5	46.2	4.5	14.5	9	19
PKG	**2K**	25	27.0	M20x1.0	9.0	54.5	5.0	18.5	12	24
PKG	**3K**	31	34.0	M24x1.0	11.5	65.7	6.0	22.5	15	30
PKG	**4K**	37	40.5	M30x1.0	9.0	75.5	6.5	28.5	19	36
PKG	**5K**	55	54.0	M45x1.5	15.0	98.0	9.0	42.5	30	–

P1 Panel cut-out (page 159)

M1 Cable assembly (page 172)

Note: the 5K series is delivered with a round nut.

PBG Fixed socket, key (G) with square flange, cable collet and screw fixing

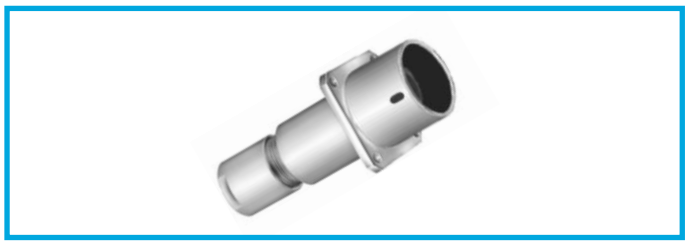

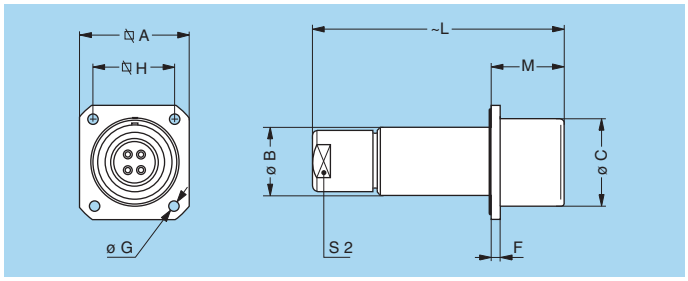

Reference		Dimensions (mm)								
Model	Series	A	B	C	F	G	H	L	M	S2
PBG	**3K**	29	19	23	3	3.4	23	65	22.5	15

P7 Panel cut-out (page 159)

M1 Cable assembly (page 172)

PEG Fixed socket, nut fixing, key (G) or keys (A to F, L and R), cable collet (back panel mounting)

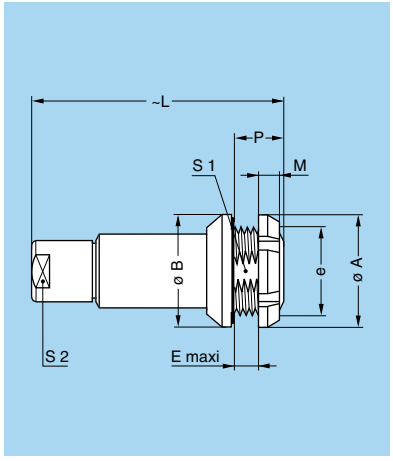

Reference		Dimensions (mm)								
Model	Series	A	B	e	E	L	M	P	S1	S2
PEG	**0K**	18	18	M14x1.0	5.0	34	3.5	8.5	12.5	8
PEG	**1K**	20	20	M16x1.0	6.5	45	3.5	10.0	14.5	9
PEG	**2K**	25	25	M20x1.0	4.0	54	3.5	7.5	18.5	12
PEG	**3K**	30	31	M24x1.0	7.5	65	4.5	12.0	22.5	15

P1 Panel cut-out (page 159)

M1 Cable assembly (page 172)

Note: the 3K series is delivered with a conical nut.

Watertight or vacuumtight models

These socket and coupler models allow the device on which they are fitted to reach a protection index of IP68 as per IEC 60529. They are fully compatible with plugs of the same series and are widely used for portable radios, military, laboratory equipment, aviation, etc.
These models are identified by a letter «P» at the end of the reference.
Most of these models are also available in a vacuumtight version. Such models are identified by an additional letter «V» at the end of the part number (certificate on request).
Epoxy resin is used to seal these models.

Technical Characteristics

Mechanical and Climatical

Characteristics		Value	Standard
Endurance[1)]		> 5000 cycles	IEC 60512-5 test 9a
Humidity		up to 95% at 60°C	
Temperature range	0K-1K	- 20°C/+ 100°C	
	2K to 5K	- 20°C/+ 80°C	
Salt spray corrosion test[4)]		> 1000h	IEC 60512-6 test 11f
Climatical category		20/80/21	IEC 60068-1
Leakage rate (He)[2)]		< 10^{-7} mbar.l.s^{-1}	IEC 60512-7 test 14b

Characteristics		Value	Standard
Maximum operating pressure[3)]	0K	60 bar	IEC 60512-7 test 14d
	1K	60 bar	IEC 60512-7 test 14d
	2K	40 bar	IEC 60512-7 test 14d
	3K	30 bar	IEC 60512-7 test 14d
	4K	15 bar	IEC 60512-7 test 14d
	5K	5 bar	IEC 60512-7 test 14d

Note: 1) see page 189, contact resistance after mating cycles. See page 185, mechanical endurance latching force.
2) only for vacuumtight models. Residual traces of grease used during (He) leak testing are on the o-ring. Please contact us for further details.
3) this value corresponds to the maximum allowed pressure difference for the assembled socket. 4) for chrome plated product («C» material code).

HGG Fixed socket, nut fixing, key (G) or keys (A to F and L), watertight or vacuumtight

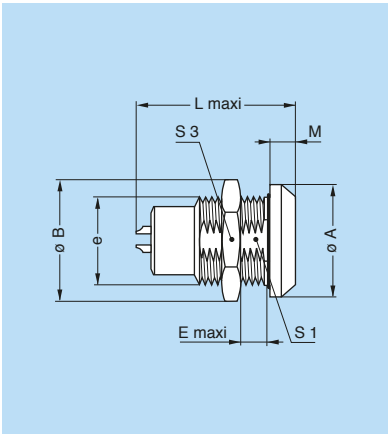

Reference		Dimensions (mm)							
Model	Series	A	B	e	E	L	M	S1	S3
HGG	0K	18	19.2	M14x1.0	5.5	23.0	4.0	12.5	17
HGG	1K	20	21.5	M16x1.0	9.0	30.0	4.5	14.5	19
HGG	2K	25	27.0	M20x1.0	13.0	33.7	5.0	18.5	24
HGG	3K	31	34.0	M24x1.0	16.0	41.7	6.0	22.5	30
HGG	4K	37	40.5	M30x1.0	14.0	49.2	6.5	28.5	36
HGG	5K	55	54.0	M45x1.5	10.0	55.7	9.0	42.5	–

P1 Panel cut-out (page 159)

Note: the 5K series is delivered with a round nut.

HEG Fixed socket, nut fixing, key (G) or keys (A to F and L), watertight or vacuumtight (back panel mounting)

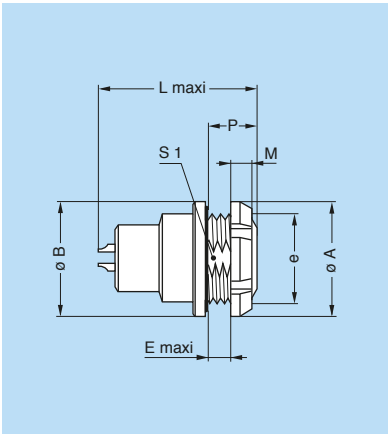

Reference		Dimensions (mm)							
Model	Series	A	B	e	E	L	M	P	S1
HEG	0K	18	18	M14x1.0	3.4	23.0	3.5	7	12.5
HEG	1K	20	20	M16x1.0	6.2	30.6	3.5	10	14.5
HEG	2K	25	25	M20x1.0	5.0	33.7	3.5	10	18.5

P1 Panel cut-out (page 159)

HMG Fixed socket with earthing tag, nut fixing, key (G) or keys (A to F and L), watertight or vacuumtight (back panel mounting)

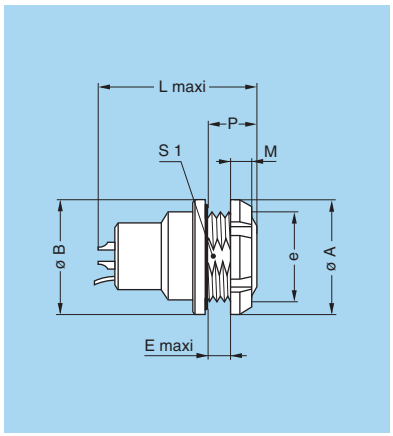

Reference		Dimensions (mm)							
Model	Series	A	B	e	E	L	M	P	S1
HMG	**1K**	20	20	M16x1.0	6.2	30.0	3.5	10	14.5
HMG	**2K**	25	25	M20x1.0	5.0	33.7	3.5	10	18.5

P1 Panel cut-out (page 159)

S●● Fixed coupler, nut fixing, key (G) or keys (L) at the flange end, and key (G) or keys (C or L) at the other end, watertight or vacuumtight

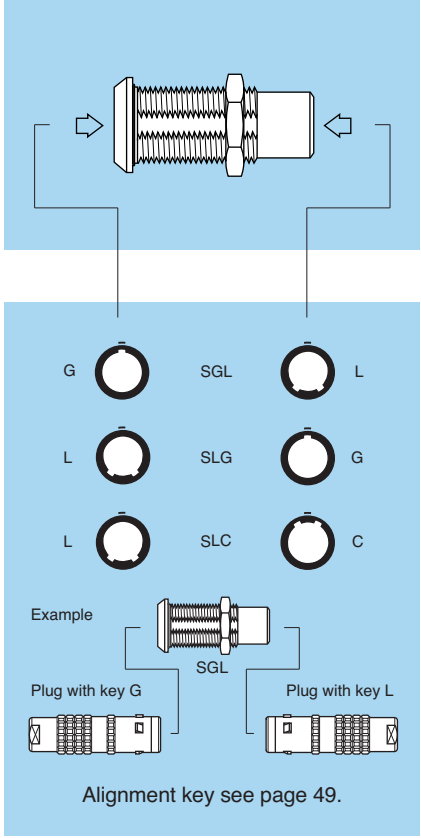

Alignment key see page 49.

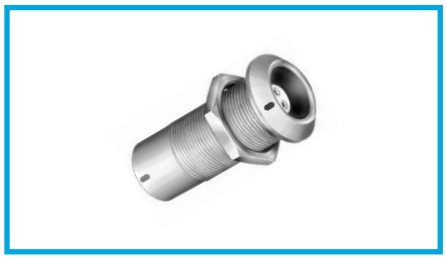

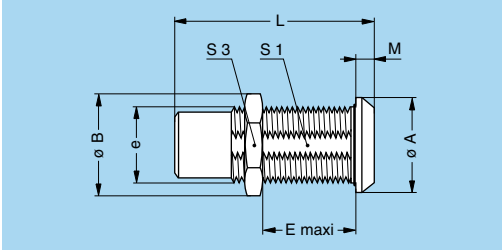

Reference		Contacts	Dimensions (mm)							
Model	Series	Type	A	B	e	E	L	M	S1	S3
SGL	**2K**	female – male	25	27.0	M20x1.0	25	52.4	5.0	18.5	24
SLG	**2K**	male – female	25	27.0	M20x1.0	25	52.4	5.0	18.5	24
SLG	**3K**	male – female	31	34.0	M24x1.0	33	64.0	6.0	22.5	30
SLG	**4K**	male – female	37	40.5	M30x1.0	48	74.0	6.5	28.5	36
SLC	**4K**	male – female	37	40.5	M30x1.0	48	74.0	6.5	28.5	36
SLG	**5K**	male – female	55	54.0	M45x1.5	58	88.0	9.0	42.5	–
SLC	**5K**	male – female	55	54.0	M45x1.5	58	88.0	9.0	42.5	–

P1 Panel cut-out (page 159)

Note: for this fixed coupler, the first contact type mentioned is always the one at the flange end. On request, these couplers can be produced in other series, with other keys.

Note: The 5K series is delivered with a round nut.

Alignment Key (K series)

Alignment Key and Polarized Keying System

K series connector model part numbers are composed of three letters. The LAST LETTER indicates the key position and the contact type (male or female).

Front view of a socket

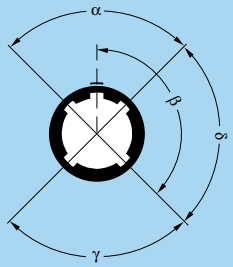

Ref.	Nb of keys	Angles	Series						Contact type		Note
			0K	1K	2K	3K	4K	5K	Plug	Socket	
G	1	–	0°	0°	0°	0°	0°	0°	male	female	●
A	2	α	30°	30°	30°	30°	30°	30°	male	female	●
B	2	α	45°	45°	45°	45°	45°	45°	male	female	●
C	2	α	60°	60°	60°	60°	60°	60°	male	female	●
D	2	γ	95°	95°	95°	95°	95°	95°	male	female	○
E	2	β	120°	120°	120°	120°	120°	120°	male	female	○
F	2	β	145°	145°	145°	145°	145°	145°	male	female	○
L	2	γ	75°	75°	75°	75°	75°	75°	female	male	●

Front view of a socket

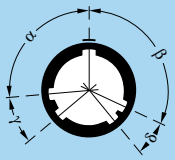

Ref.	Nb of keys	Angles	Series						Contact type		Note
			0K	1K	2K	3K	4K	5K	Plug	Socket	
R	5	α	–	–	–	95°	–	–	male	female	●
	5	β	–	–	–	115°	–	–	male	female	●
	5	γ	–	–	–	35°	–	–	male	female	●
	5	δ	–	–	–	25°	–	–	male	female	●

Note: S●● and TGL models are not available with all the keys. For S●● models see explanation on page 48.
Please consult the pages corresponding to these models.

● First choice alternative
○ Special order alternative

T Series

T series connectors have been specifically designed for outdoor applications. They include an inner sleeve and seals to prevent penetration of solids or liquids.This series is watertight when mated to give a protection index of IP68 as per IEC 60529 standard and have the following main features:

- IP68 mated
- Push-Pull self-latching system
- Mechanical key (FGG) with multiple keys to avoid cross-mating
- High packing density for space savings
- 360° shielding for full EMC shielding
- Compatible with existing B sockets
- Same mounting hole as B sockets
- Black-chrome plated brass and plastic outershell available
- Multipole types 2 to 32 contacts
- For cables 1.0 up to 10.5 mm
- Solder, crimp or print contacts

Metal housing models (page 52)

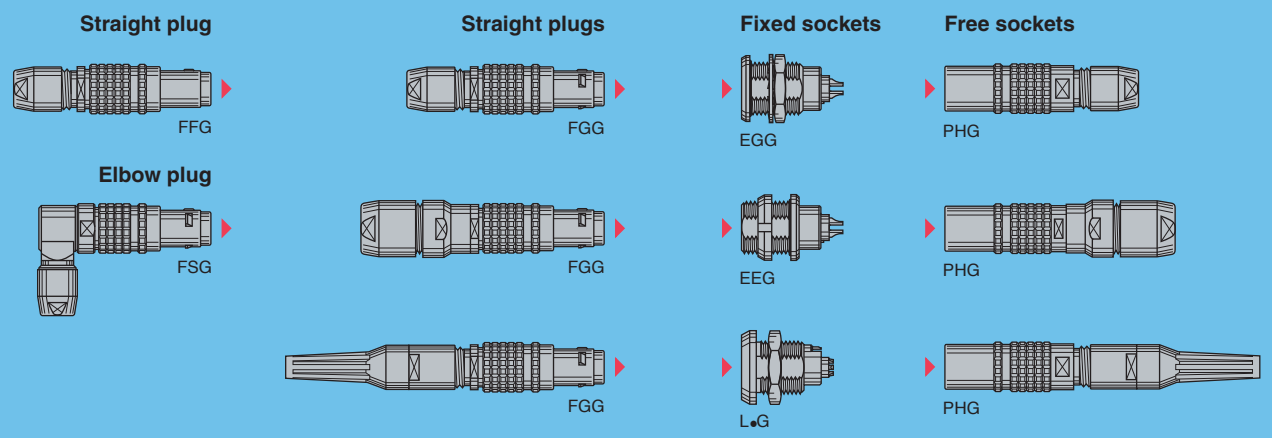

Plastic housing models (page 56)

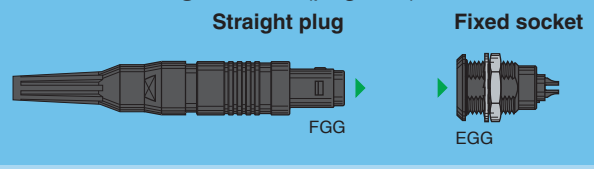

Watertight or vacuumtight models (page 55)

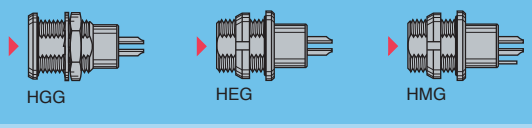

Part Section Showing Internal Components

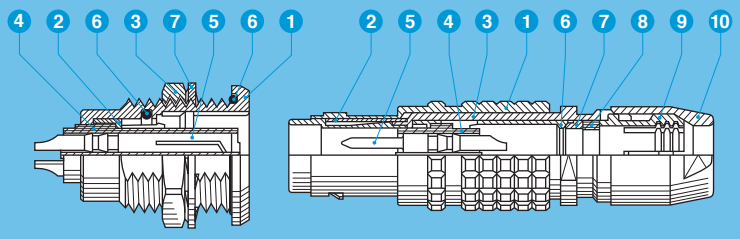

Fixed socket

1. outer shell
2. earthing crown
3. hexagonal nut
4. insulator
5. female contact
6. o-ring
7. locking washer

Straight plug

1. outer shell
2. latch sleeve
3. inner shell
4. insulator
5. male contact
6. split insert carrier
7. earthing cone
8. gasket
9. collet
10. collet nut

Part Numbering System

Plug and free socket

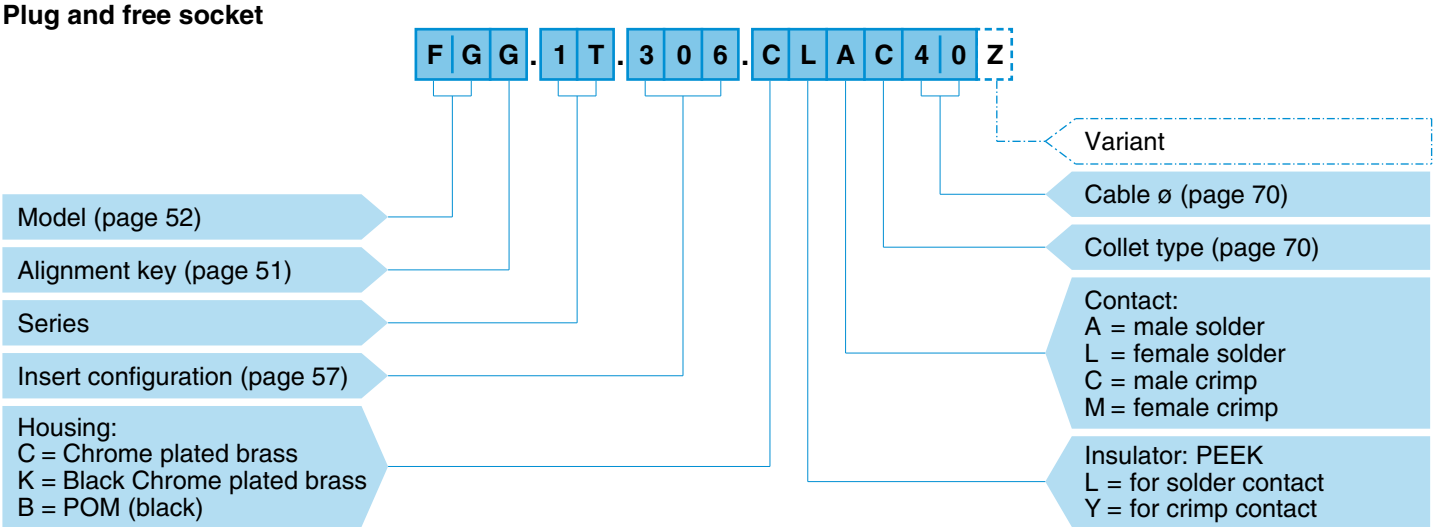

FGG.1T.306.CLAC40Z = Straight plug with key (G) and cable collet for bend relief, 1T series, multipole type with 6 contacts, outer shell in chrome-plated brass, PEEK insulator, male solder contacts, C type collet for 4.0 mm diameter cable and nut for fitting a bend relief.

Fixed socket

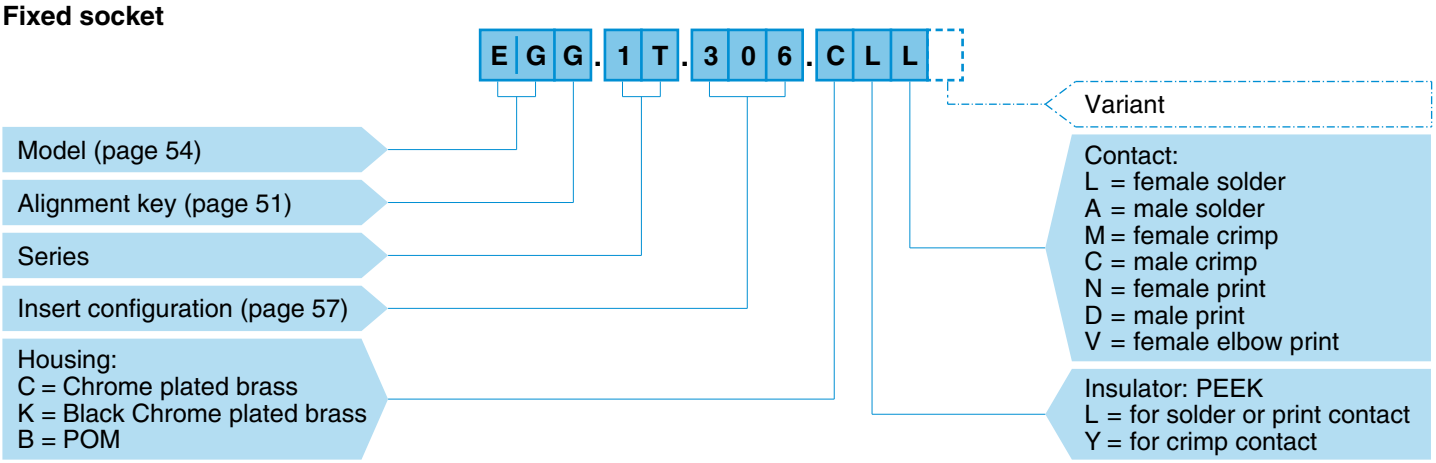

EGG.1T.306.CLL = fixed socket, nut fixing, with key (G), 1T series, multipole type with 6 contacts, outer shell in chrome-plated brass, PEEK insulator, female solder contacts.

Alignment Key

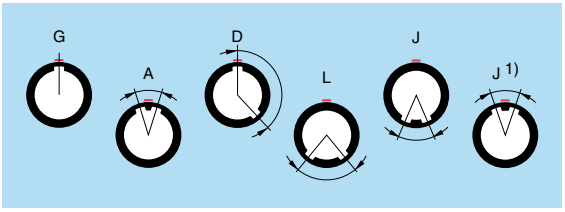

Key	Contact type	
	Plug	Socket
G	male	female
A	male	female
D	male	female
L	female	male
J	female	male

Note: 1) for 2T and 3T series.

Metal housing models

Technical Characteristics

Mechanical and Climatical

Characteristics	Value	Standard
Endurance [1]	> 3000 cycles	IEC 60512-5 test 9a
Humidity	up to 95% at 60° C	
Temperature range [2]	- 55° C, + 200° C / (-20°C, +80°C)	
Resistance to vibrations	10-2000 Hz, 15g	IEC 60512-4 test 6d
Shock resistance	100 g, 6 ms	IEC 60512-4 test 6c
Salt spray corrosion test [6]	> 1000h	IEC 60512-6 test 11f
Protection index (mated) [3]	IP 68/IP 66	IEC 60529
Latching retention force [4] [5]	From 85 N up to 300 N	
Climatical category	50/175/21	IEC 60068-1

Electrical

Characteristics		Value	Standard
Shielding efficiency	at 10 MHz	> 75 dB	IEC 60169-1-3
	at 1 GHz	> 40 dB	IEC 60169-1-3

Note:
the various tests have been carried out with FGG and EGG connector pairs, with chrome-plated brass shell and PEEK insulator.
Detailed electrical characteristics, as well as materials and treatment are presented in the chapter Technical Characteristics on page 182.

Note:
[1] see page 189, contact resistance after mating cycles. See page 185, mechanical endurance latching force.
[2] operating temperature is -20°C, +80°C for watertight or vacuumtight models fitted with an FPM (Viton®) o-ring and Epoxy.
[3] IP68 achieved providing that the cable is perfectly circular and that assembly process ensures a high integrity seal.
[4] average value.
[5] depending of the size.
[6] for chrome plated product (« C » material code).

FGG Straight plug, cable collet

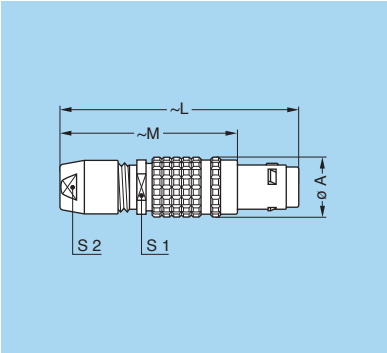

Reference		Dimensions (mm)					Cable ø	
Model	Series	A	L	M	S1	S2	min.	max.
FGG	TT	7.0	33.2	25.2	5.5	5	2.4	3.0
FGG	0T	9.5	39.0	29.0	7.5	7	1.0	4.5
FGG	1T	12.0	46.0	35.0	11.0	9	1.3	6.5
FGG	2T	15.0	55.0	43.0	14.0	12	1.3	8.5
FGG	3T	18.8	64.0	49.0	16.0	14	2.6	10.5

M1 Cable assembly (page 174)

FGG Straight plug, cable collet and oversize cable collet [1]

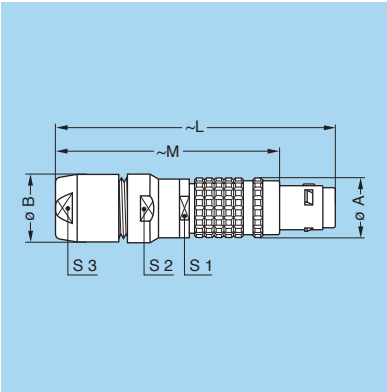

Reference		Dimensions (mm)							Cable ø	
Model	Series	A	B	L	M	S1	S2	S3	min.	max.
FGG	0T	9.5	10.9	50.7	40.9	8.5	10	9	4.6	6.5
FGG	1T	12.0	13.9	60.2	49.1	11.0	13	12	6.6	8.5
FGG	2T	15.0	16.5	69.1	57.0	14.0	15	14	8.6	10.5
FGG	3T	18.8	23.0	87.7	72.7	16.0	20	20	10.6	15.0

M2 Cable assembly (page 174)

Note: [1] correspond to K type of collet, the fitting of oversize collets onto this model allows them to be fitted to the cables that can be accommodated by the next housing size up (see page 70).

FGG Straight plug, cable collet and nut for fitting a bend relief [1)]

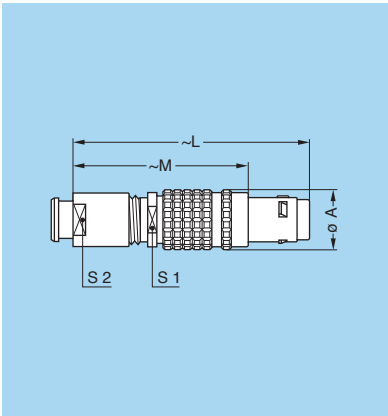

Reference		Dimensions (mm)					Cable ø	
Model	Series	A	L	M	S1	S2	min.	max.
FGG	**TT**	7.0	32.7	24.7	5.5	6	2.4	3.0
FGG	**0T**	9.5	38.0	28.0	7.5	7	1.0	4.5
FGG	**1T**	12.0	45.0	34.0	11.0	9	1.3	6.5
FGG	**2T**	15.0	54.0	42.0	14.0	12	1.3	8.5
FGG	**3T**	18.8	62.0	47.0	16.0	15	2.6	10.5

M1 Cable assembly (page 174)

Note: [1)] to order, add a «Z» at the end of the reference.
The bend relief must be ordered separately (see page 145).

FFG Straight plug, non latching, cable collet

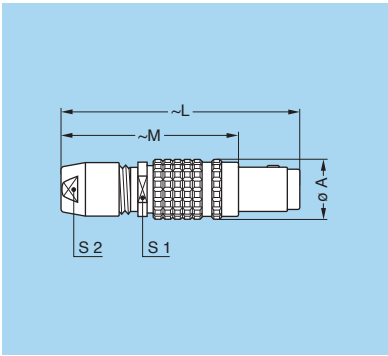

Reference		Dimensions (mm)					Cable ø	
Model	Series	A	L	M	S1	S2	min.	max.
FFG	**TT**	7.0	33.2	25.2	5.5	5	2.4	3.0
FFG	**0T**	9.5	39.0	29.0	8.0	7	1.0	4.5
FFG	**1T**	12.0	46.0	35.0	10.0	9	1.3	6.5
FFG	**2T**	15.0	55.0	43.0	13.0	12	1.3	8.5
FFG	**3T**	18.8	64.0	49.0	16.0	14	2.6	10.5

M1 Cable assembly (page 174)

FSG Adjustable right angle plug

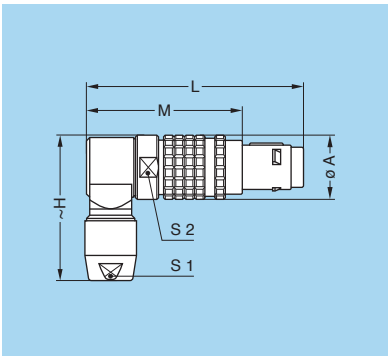

Reference		Dimensions (mm)						Cable ø	
Model	Series	A	H	L	M	S1	S2	min.	max.
FSG	**TT**	8	20.0	28.5	20.5	5	7.5	2.4	3.0
FSG	**0T**	10	23.0	36.0	26.0	7	9.5	1.0	4.5
FSG	**1T**	13	30.0	43.5	32.5	9	12.0	1.3	6.5
FSG	**2T**	17	37.5	54.0	42.0	12	16.0	1.3	8.5

PHG Free socket, cable collet

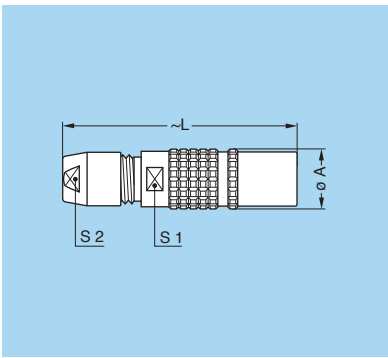

Reference		Dimensions (mm)				Cable ø	
Model	Series	A	L	S1	S2	min.	max.
PHG	**TT**	7.0	32.0	5.5	5	2.4	3.0
PHG	**0T**	9.5	38.0	8.0	7	1.0	4.5
PHG	**1T**	12.0	43.5	10.0	9	1.3	6.5
PHG	**2T**	15.0	52.0	13.0	12	1.3	8.5
PHG	**3T**	18.8	61.5	16.0	14	2.6	10.5

M1 Cable assembly (page 174)

PHG Free socket, cable collet and oversize cable collet [1)]

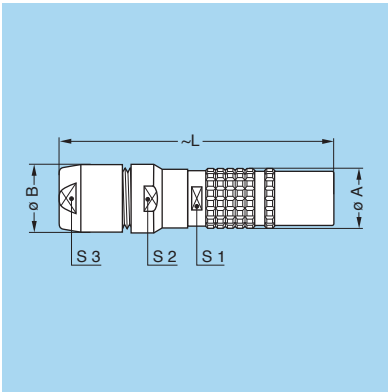

Reference		Dimensions (mm)						Cable ø	
Model	Series	A	B	L	S1	S2	S3	min.	max.
PHG	**0T**	9.5	10.9	49.7	8	10	9	4.6	6.5
PHG	**1T**	12.0	13.9	58.2	10	13	12	6.6	8.5
PHG	**2T**	15.0	16.5	66.6	13	15	14	8.6	10.5
PHG	**3T**	18.8	23.0	85.5	16	20	20	10.6	15.0

M2 Cable assembly (page 174)

Note: [1)] correspond to K type of collet, the fitting of oversize collets onto this model allows them to be fitted to the cables that can be accommodated by the next housing size up (see page 70).

PHG Free socket, cable collet and nut for fitting a bend relief [1)]

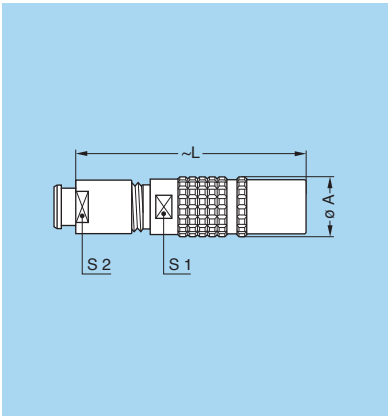

Reference		Dimensions (mm)				Cable ø	
Model	Series	A	L	S1	S2	min.	max.
PHG	**TT**	7.0	31.5	5.5	6	2.4	3.0
PHG	**0T**	9.5	37.0	8.0	7	1.0	4.5
PHG	**1T**	12.0	42.5	10.0	9	1.3	6.5
PHG	**2T**	15.0	51.0	13.0	12	1.3	8.5
PHG	**3T**	18.8	60.0	16.0	15	2.6	10.5

M1 Cable assembly (page 174)

Note: [1)] to order, add a «Z» at the end of the reference.
The bend relief must be ordered separately (see page 145).

EGG Fixed socket, nut fixing

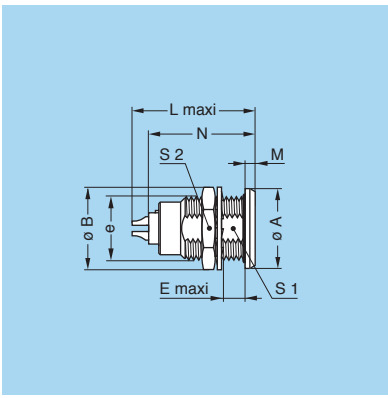

Reference		Dimensions (mm)								
Model	Series	A	B	e	E	L	M	N[1)]	S1	S2
EGG	**TT**	10.0	10.2	M7x0.5	5.5	16.0	1.2	13.5	6.3	9
EGG	**0T**	12.0	12.5	M9x0.6	6.0	21.0	1.5	19.1	8.2	11
EGG	**1T**	15.5	16.0	M12x1.0	6.0	23.0	1.8	21.5	10.5	14
EGG	**2T**	18.5	19.6	M15x1.0	7.5	26.5	1.8	24.6	13.5	17
EGG	**3T**	23.5	25.1	M18x1.0	9.6	30.1	2.5	25.0	16.5	22

P1 Panel cut-out (page 157)

Note: [1)] maximum length with crimp contacts.

EEG Fixed socket, nut fixing (back panel mounting)

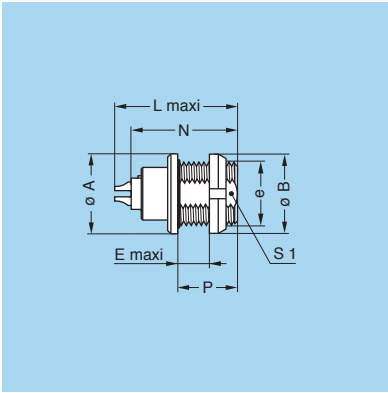

Reference		Dimensions (mm)							
Model	Series	A	B	e	E	L	N[1)]	P	S1
EEG	**TT**	10.0	10.0	M7x0.5	4.5	16.0	13.5	7	6.3
EEG	**0T**	12.0	12.0	M9x0.6	6.5	21.0	19.1	9	8.2
EEG	**1T**	15.5	16.0	M12x1.0	6.5	23.0	21.5	10	10.5
EEG	**2T**	18.5	20.0	M15x1.0	7.5	26.5	24.6	11	13.5
EEG	**3T**	23.5	24.0	M18x1.0	7.5	30.1	25.0	12	16.5

P1 Panel cut-out (page 157)

Note: [1)] maximum length with crimp contacts.

L•G Fixed socket, nut fixing, key (G) or keys (A…L)

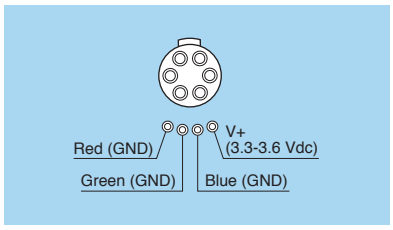

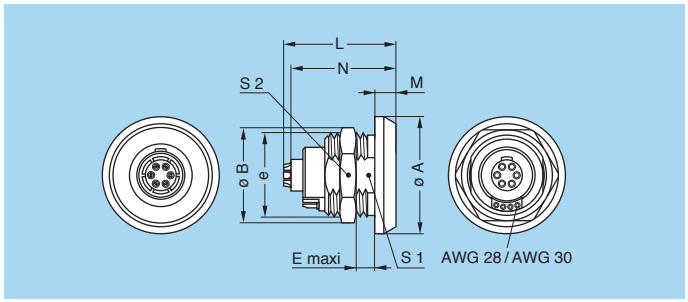

Reference		Dimensions (mm)								
Model	Series	A	B	e	E	L	M	N	S1	S2
L•G	0T	19	18.2	M13x0.75	4.0	18.5	5	16.0	11.5	16
L•G	1T	21	19.2	M15x1.00	5.8	21.0	5	18.5	13.5	17
L•G	2T	25	27.0	M20x1.00	6.5	24.1	5	21.5	18.5	24

Note: Only available with solder or crimp contacts.
LEG model is with LED flange, LNG model is with narrow LED flange and LMG model is with single standby LED flange.

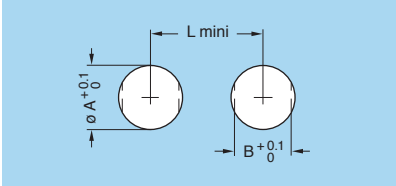

Series	Dim. (mm)		
	A	B	L
0T	13.1	11.6	24
1T	15.1	13.6	26
2T	20.1	18.6	29

Watertight or vacuumtight models

These models are identified by a letter «P» at the end of the reference. Most of these models are also available in a vacuum-tight version. Such models are identified by an additional letter «V» at the end of the part number (certificate on request). Epoxy resin is used to seal these models. The temperature range is -20°C / +80°C.

Part Number Example

HGG.0T.305.CLLP (5 contacts, resin potted) / HGG.0T.305.CLLPV (5 contacts, resin potted and vacuumtight tested)

Mechanical and Climatical Characteristics

Characteristics	Value	Standard
Endurance [1]	> 3000 cycles	IEC 60512-5 test 9a
Humidity	up to 95% at 60° C	
Temperature range [2]	-20°C, +80°C	
Resistance to vibrations	10-2000 Hz, 15g	IEC 60512-4 test 6d
Shock resistance	100 g, 6 ms	IEC 60512-4 test 6c
Salt spray corrosion test [6]	> 1000h	IEC 60512-6 test 11f
Protection index (mated) [3]	IP 68/IP 66	IEC 60529
Latching retention force [4] [5]	From 85 N up to 300 N	
Climatical category	50/175/21	IEC 60068-1
Leakage rate (He)	< 10^{-7} mbar.l.s^{-1}	IEC 60512-7 test 14b

Characteristics		Value	Standard
Maximum operating pressure[7]	TT	60 bar	IEC 60512-7 test 14d
	0T	60 bar	IEC 60512-7 test 14d
	1T	60 bar	IEC 60512-7 test 14d
	2T	40 bar	IEC 60512-7 test 14d

Note:
1) see page 189, contact resistance after mating cycles. See page 185, mechanical endurance latching force.
2) operating temperature is -20°C, +80°C for watertight or vacuumtight models fitted with an FPM (Viton®) o-ring and Epoxy.
3) IP68 achieved providing that the cable is perfectly circular and that assembly process ensures a high integrity seal.
4) average value.
5) depending of the size.
6) for chrome plated product (« C » material code).
7) this value corresponds to the maximum allowed pressure difference for the assembled socket.

HGG Fixed socket, nut fixing, watertight or vacuumtight

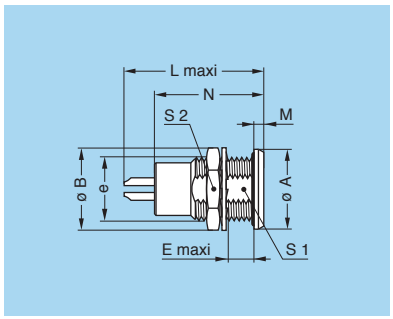

Reference		Dimensions (mm)								
Model	Series	A	B	e	E	L	M	N[1]	S1	S2
HGG	TT	10.0	10.2	M7x0.5	5.5	18.0	1.2	15.0	6.3	9
HGG	0T	12.0	12.5	M9x0.6	6.5	22.0	1.5	18.5	8.2	11
HGG	1T	15.5	16.0	M12x1.0	6.0	26.0	1.8	21.5	10.5	14
HGG	2T	18.5	19.6	M15x1.0	8.0	30.5	1.8	25.0	13.5	17

P9 Panel cut-out (page 157)

HEG Fixed socket, nut fixing, watertight or vacuumtight (back panel mounting)

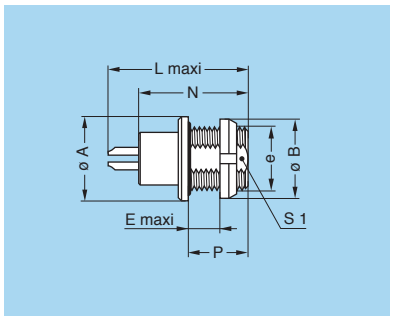

Reference		Dimensions (mm)							
Model	Series	A	B	e	E	L	N	P	S1
HEG	TT	10.0	10.0	M7x0.5	4.5	18.0	15.0	7	6.3
HEG	0T	12.0	12.0	M9x0.6	6.5	22.0	18.5	9	8.2
HEG	1T	15.5	16.0	M12x1.0	6.5	26.0	21.5	10	10.5
HEG	2T	18.5	20.0	M15x1.0	7.5	30.5	25.0	11	13.5

P9 Panel cut-out (page 157)

HMG Fixed socket with earthing tag, nut fixing, watertight or vacuumtight (back panel mounting)

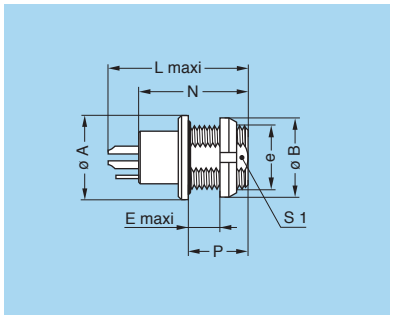

Reference		Dimensions (mm)							
Model	Series	A	B	e	E	L	N	P	S1
HMG	TT	10.0	10.0	M7x0.5	4.5	18.0	15.0	7	6.3
HMG	0T	12.0	12.0	M9x0.6	6.5	22.0	18.5	9	8.2
HMG	1T	15.5	16.0	M12x1.0	6.5	26.0	21.5	10	10.5
HMG	2T	18.5	20.0	M15x1.0	7.5	30.5	25.0	11	13.5

P9 Panel cut-out (page 157)

Plastic housing models

FGG Straight plug, cable collet and nut for fitting a bend relief, POM outer shell [1)]

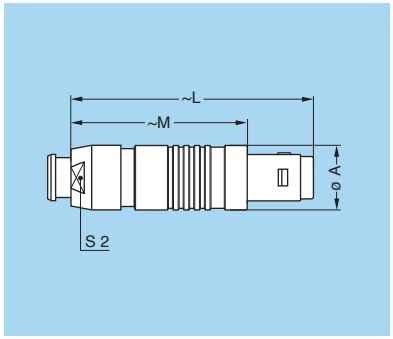

Reference		Dimensions (mm)				Cable ø	
Model	Series	A	L	M	S2	min.	max.
FGG	0T	9.7	38.5	28.5	8	1.0	4.5
FGG	1T	13.0	45.0	34.0	10	1.3	6.5

M1 Cable assembly (page 174)

Note: [1)] to order, add a «Z» at the end of the reference.
The bend relief must be ordered separately (see page 145).

EGG Fixed socket, nut fixing, POM outer shell

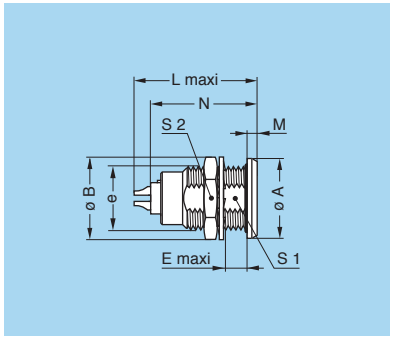

Reference		Dimensions (mm)								
Model	Series	A	B	e	E	L	M	N[1)]	S1	S2
EGG	0T	12.0	12.5	M9x0.6	6.0	21.0	1.5	19.1	8.2	11
EGG	1T	15.5	16.0	M12x1.0	6.0	23.0	1.8	21.5	10.5	14

P1 Panel cut-out (page 157)

Note: [1)] maximum length with crimp contacts.

Insert configuration (B, K and T series)

Multipole

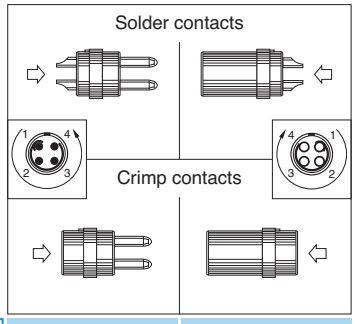

	Reference	Series	Contact ø (mm)	Contact type: Solder	Contact type: Crimp	Contact type: Print (straight)	Contact type: Print (elbow)	AWG: Solder (max.)	AWG: Crimp min.	AWG: Crimp max.	Solder contact: Test voltage (kV rms)[1] Contact-contact	Solder contact: Test voltage (kV rms)[4] Contact-shell	Crimp contact: Test voltage (kV rms)[1] Contact-contact	Crimp contact: Test voltage (kV rms)[4] Contact-shell	Rated current (A)[1]
2	302	00-TT	0.5	●	●	●	●	30	32	28	1.00	0.95	1.15	1.20	3.5
		0B-0K-0T	0.9	●	●	●	●	20	32	20	1.00	1.05	1.45	1.20	10.0[2]
		1B-1K-1T	1.3	●	●	●	●	20	26	18	1.50	1.35	1.70	1.45	15.0[3]
		2B-2K-2T	2.0	●	●	●	●	16	18	12	2.10	1.75	2.85	2.70	25.0[3]
		3B-3K-3T	3.0	●	●	○	–	12	14	10	2.10	1.55	2.30	1.80	35.0
		5B-5K	6.0	●	–	–	–	8	–	–	3.60	2.95	–	–	50.0
3	303	00-TT	0.5	●	●	●	●	30	32	28	0.80	0.95	1.35	1.10	3.0
		0B-0K-0T	0.9	●	●	●	●	20	32	20	1.20	0.90	1.70	1.60	8.0[2]
		1B-1K-1T	1.3	●	●	●	●	20	26	18	1.30	1.55	1.60	1.85	12.0
		2B-2K-2T	1.6	●	●	●	●	18	22	14	2.40	1.85	1.90	1.90	17.0[3]
		3B-3K-3T	2.0	●	●	●	○	16	18	12	1.90	1.50	3.20	2.65	25.0
4	304	00-TT	0.5	●	●	●	●	30	32	28	0.80	0.65	1.05	1.05	2.0
		0B-0K-0T	0.7	●	●	●	●	22	32	22	0.85	0.70	1.35	1.10	7.0[2]
		1B-1K-1T	0.9	●	●	●	●	22	32	20	1.35	1.45	1.70	1.80	10.0[2]
		2B-2K-2T	1.3	●	●	●	●	20	26	18	1.85	1.85	2.20	2.20	15.0[3]
		3B-3K-3T	2.0	●	●	●	●	16	18	12	1.45	1.25	2.50	2.20	19.0
		4B-4K	3.0	●	●	○	–	12	14	10	2.10	1.50	1.80	1.20	30.0
		5B-5K	4.0	●	●	○	–	10	12	10	2.95	2.65	3.20	2.40	35.0
5	305	00-TT	0.35	●	–	●	–	30	–	–	0.70	1.00	–	–	1.7

● First choice alternative
○ Special order alternative

Note: [1] see calculation method, caution and suggested standard on page 190.
[2] rated current = 6A for socket with elbow (90°) contact for printed circuit.
[3] rated current = 12A for socket with elbow (90°) contact for printed circuit.
[4] test voltage (kV) contact-shell is slightly lower for K and T series (values here are for B series).

Multipole

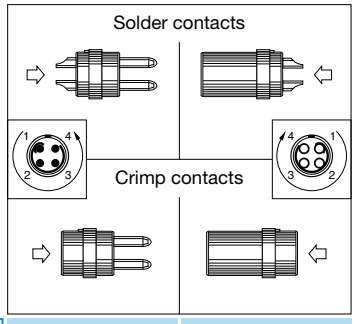

	Reference	Series	Contact ø (mm)	Contact type: Solder	Contact type: Crimp	Contact type: Print (straight)	Contact type: Print (elbow)	AWG: Solder (max.)	AWG: Crimp min.	AWG: Crimp max.	Solder contact: Test voltage (kV rms)[1] Contact-contact	Solder contact: Test voltage (kV rms)[5] Contact-shell	Crimp contact: Test voltage (kV rms)[1] Contact-contact	Crimp contact: Test voltage (kV rms)[5] Contact-shell	Rated current (A)[1]
5	305	0B-0K-0T	0.7	●	●	●	●	22	32	22	1.00	0.70	1.25	1.20	6.5[2]
		1B-1K-1T	0.9	●	●	●	●	22	32	20	1.25	1.15	1.30	1.55	9.0[2]
		2B-2K-2T	1.3	●	●	●	●	20	26	18	1.75	1.60	2.15	2.15	14.0[3]
		3B-3K-3T	1.6	●	●	●	●	18	22	14	1.90	1.25	2.40	1.75	19.0
6	306														
		0B-0K-0T	0.5	●	○[4]	●	●	28	32	28	0.85	0.65	1.40	1.20	2.5
		1B-1K-1T	0.7	●	●	●	●	22	32	22	1.05	1.20	1.35	1.45	7.0[2]
6	306	00-TT	0.35	●	–	–	–	30	–	–	0.60	0.75	–	–	1.5
		2B-2K-2T	1.3	●	●	●	●	20	26	18	1.35	1.45	2.00	2.35	12.0
		3B-3K-3T	1.6	●	●	●	●	18	22	14	1.60	1.15	1.90	1.80	17.0
		4B-4K	2.0	●	●	○	–	16	18	12	2.00	1.75	2.75	2.40	24.0
7	307	0B-0K-0T	0.5	●	○[4]	●	●	28	32	28	0.80	0.70	1.40	1.20	2.5
		1B-1K-1T	0.7	●	●	●	●	22	32	22	0.95	1.05	1.45	1.45	7.0[2]
		2B-2K-2T	1.3	●	●	●	●	20	26	18	1.75	1.60	1.95	2.15	11.0
		3B-3K-3T	1.6	●	●	●	○	18	22	14	1.70	1.25	2.00	2.05	15.0
		4B-4K	2.0	●	●	○	–	16	18	12	2.00	1.80	1.50	1.35	20.0
8	308														
		1B-1K-1T	0.7	●	●	●	●	22	32	22	0.95	1.15	1.30	1.30	5.0
8	308														
		2B-2K-2T	0.9	●	●	●	●	22	32	20	1.50	1.25	1.95	1.95	10.0[2]
		3B-3K-3T	1.3	●	●	●	●	20	26	18	1.65	1.15	1.85	1.75	13.0

● First choice alternative
○ Special order alternative

Note: [1] see calculation method, caution and suggested standard on page 190.
[2] rated current = 6A for socket with elbow (90°) contact for printed circuit.
[3] rated current = 12A for socket with elbow (90°) contact for printed circuit.
[4] available only for connectors fitted with male contacts.
[5] test voltage (kV) contact-shell is slightly lower for K and T series (values here are for B series).

Multipole

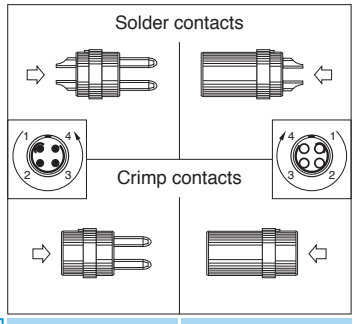

	Reference	Series	Contact ø (mm)	Contact type: Solder	Contact type: Crimp	Contact type: Print (straight)	Contact type: Print (elbow)	AWG: Solder (max.)	AWG: Crimp min.	AWG: Crimp max.	Solder contact: Test voltage (kV rms)[1] Contact-contact	Solder contact: Test voltage (kV rms)[4] Contact-shell	Crimp contact: Test voltage (kV rms)[1] Contact-contact	Crimp contact: Test voltage (kV rms)[4] Contact-shell	Rated current (A)[1]
9	309	0B-0K-0T	0.5	●	○[3]	●	●	28	32	28	0.60	0.50	1.00	0.85	2.0
9	309	3B-3K-3T	8x1.3 1x2.0	●	●	●	–	20 16	26 18	18 12	1.35	1.05	1.10	1.05	6.0 15.0
10	310	1B-1K-1T	0.5	●	●[3]	●	●	28	32	28	0.90	1.50	1.20	1.80	2.5
		2B-2K-2T	0.9	●	●	●	●	22	32	20	1.45	1.30	1.80	2.10	8.0[2]
		3B-3K-3T	1.3	●	●	●	●	20	26	18	1.25	0.90	1.50	1.80	12.0
		4B-4K	1.6	●	●	○	–	18	22	14	1.85	1.30	1.90	1.95	17.0
		5B-5K	3.0	●	●	○	–	12	14	10	2.35	2.30	2.65	3.20	20.0
12	312	0B-0K-0T	0.35	●	–	●	–	30	–	–	0.80	1.00	–	–	1.5
12	312	XB	0.7	●	–	●	–	22	32	22	1.35	1.65	–	–	5.0
12	312	2B-2K-2T	0.7	●	●	●	●	22	32	22	1.25	1.35	1.65	2.00	7.0[2]
		3B-3K-3T	0.9	●	●	●	●	22	32	20	1.45	1.00	1.65	1.85	9.0
		4B-4K	1.3	●	●	○	–	20	26	18	1.45	1.60	1.90	1.85	12.0

● First choice alternative
○ Special order alternative

Note: [1] see calculation method, caution and suggested standard on page 190.
[2] rated current = 6A for socket with elbow (90°) contact for printed circuit.
[3] available only for connectors fitted with male contacts.
[4] test voltage (kV) contact-shell is slightly lower for K and T series (values here are for B series).

Multipole

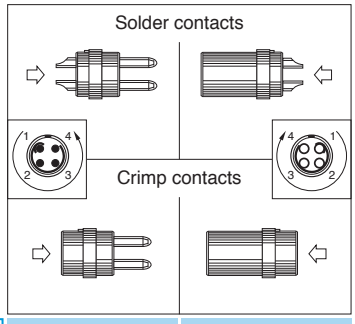

			Reference	Series	Contact ø (mm)	Contact type: Solder	Contact type: Crimp	Contact type: Print (straight)	Contact type: Print (elbow)	AWG: Solder (max.)	AWG: Crimp min.	AWG: Crimp max.	Solder contact: Test voltage (kV rms)[1] Contact-contact	Solder contact: Test voltage (kV rms)[4] Contact-shell	Crimp contact: Test voltage (kV rms)[1] Contact-contact	Crimp contact: Test voltage (kV rms)[4] Contact-shell	Rated current (A)[1]
14			314	1B-1K-1T	0.5	●	●[3]	●	●	28	32	28	0.80	1.20	0.95	1.60	2.0
				2B-2K-2T	0.7	●	●	●	●	22	32	22	1.15	1.35	1.55	1.55	6.5[2]
				3B-3K-3T	0.9	●	●	●	●	22	32	20	1.20	1.20	1.80	1.65	9.0[2]
				5B-5K	2.0	●	●	○	–	16	18	12	2.10	2.00	2.85	2.95	18.0
16			316	1B-1K-1T	0.5	●	●[3]	●	○	28	32	28	0.80	1.25	0.95	1.60	1.5
16			316	2B-2K-2T	0.7	●	●	●	●	22	32	22	0.95	1.25	1.55	1.75	6.0
				3B-3K-3T	0.9	●	●	●	●	22	32	20	1.20	0.85	1.80	1.50	8.0
				4B-4K	0.9	●	●	●	–	22	32	20	1.35	1.50	2.30	2.10	10.0
				5B-5K	2.0	●	●	○	–	16	18	12	1.85	1.95	2.45	3.05	12.0
18			318	2B-2K-2T	0.7	●	●	●	●	22	32	22	0.85	1.20	1.45	2.10	5.5
				3B-3K-3T	0.9	●	●	●	●	22	32	20	1.20	1.05	1.85	1.60	7.0
19			319	2B-2K-2T	0.7	●	●	●	●	22	32	22	0.95	1.25	1.55	1.65	5.0
20			320	3B-3K-3T	0.7	●	●	●	●	22	32	22	1.00	0.90	1.35	1.55	6.0

● First choice alternative
○ Special order alternative

Note: [1] see calculation method, caution and suggested standard on page 190.
[2] rated current = 6A for socket with elbow (90°) contact for printed circuit.
[3] available only for connectors fitted with male contacts.
[4] test voltage (kV) contact-shell is slightly lower for K and T series (values here are for B series).

Multipole

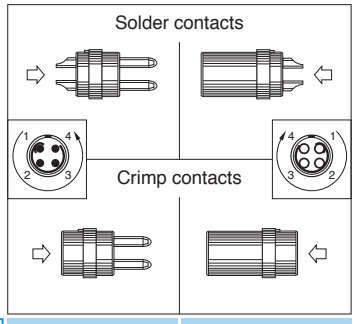

			Reference	Series	Contact ø (mm)	Contact type: Solder	Contact type: Crimp	Contact type: Print (straight)	Contact type: Print (elbow)	AWG: Solder (max.)	AWG: Crimp min.	AWG: Crimp max.	Solder contact: Test voltage (kV rms)[1] Contact-contact	Solder contact: Test voltage (kV rms)[2] Contact-shell	Crimp contact: Test voltage (kV rms)[1] Contact-contact	Crimp contact: Test voltage (kV rms)[2] Contact-shell	Rated current (A)[1]
20	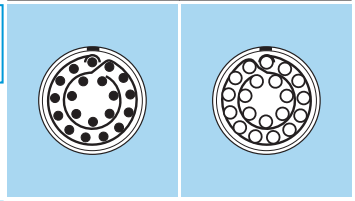		320	4B-4K	0.9	●	●	●	–	22	32	20	1.35	1.00	1.05	0.95	8.0
				5B-5K	1.6	●	●	○	–	18	22	14	1.90	1.70	2.20	2.40	10.0
22	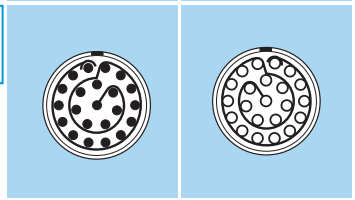		322	XB	0.5	●	–	●	–	28	–	–	0.50	0.90	–	–	1.5
22	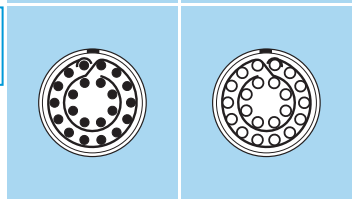		322	3B-3K-3T	0.7	●	●	●	○	22	32	22	1.00	0.90	1.70	1.45	5.5
24	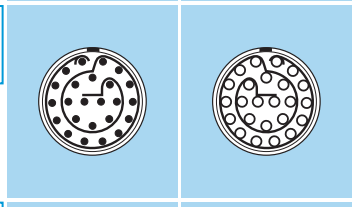		324	3B-3K-3T	0.7	●	●	●	●	22	32	22	0.95	0.80	1.35	1.35	4.0
				4B-4K	0.9	●	●	●	–	22	32	20	1.20	1.45	1.80	2.05	7.0
26	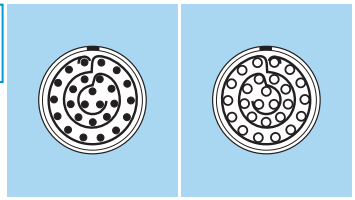		326	2B-2K-2T	0.5	●	–	●	●	28	–	–	0.95	1.30	–	–	2.0
				3B-3K-3T	0.7	●	●	●	●	22	32	22	0.95	0.70	1.50	1.30	4.0
30	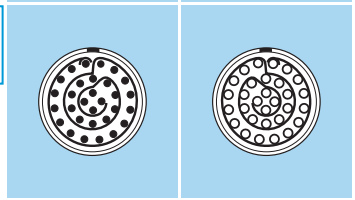		330	3B-3K-3T	0.7	●	●	●	●	22	32	22	0.80	0.70	1.35	1.20	3.5
				4B-4K	0.9	●	●	●	–	22	32	20	0.95	0.85	1.75	1.45	5.0
				5B-5K	1.3	●	●	○	–	20	26	18	1.45	1.60	2.05	2.45	8.0

● First choice alternative
○ Special order alternative

Note: [1] see calculation method, caution and suggested standard on page 190.
[2] test voltage (kV) contact-shell is slightly lower for K and T series (values here are for B series).

Multipole

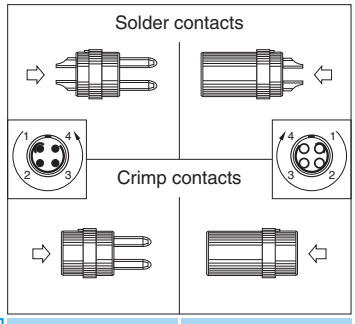

		Reference	Series	Contact ø (mm)	Contact type: Solder	Contact type: Crimp	Contact type: Print (straight)	Contact type: Print (elbow)	AWG: Solder (max.)	AWG: Crimp min.	AWG: Crimp max.	Solder contact: Test voltage (kV rms)[1] Contact-contact	Solder contact: Test voltage (kV rms)[2] Contact-shell	Crimp contact: Test voltage (kV rms)[1] Contact-contact	Crimp contact: Test voltage (kV rms)[2] Contact-shell	Rated current (A)[1]
32	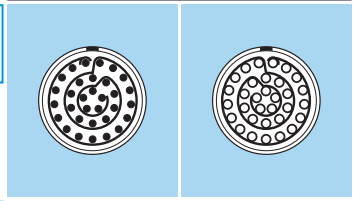	332	2B-2K-2T	0.5	●	–	●	●	28	–	–	0.80	1.20	–	–	1.5
32	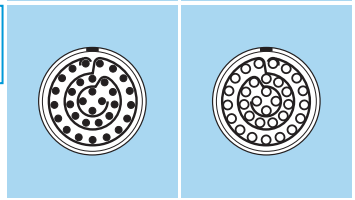	332	3B-3K-3T	0.7	●	○	●	●	22	32	22	0.75	0.70	–	–	3.0
40	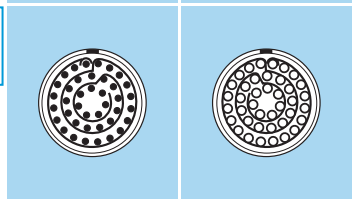	340	4B-4K	0.7	●	●	●	–	22	32	22	0.90	0.90	1.30	1.30	2.0
			5B-5K	1.3	●	●	○	–	20	26	18	1.30	1.45	2.00	1.95	7.0
48	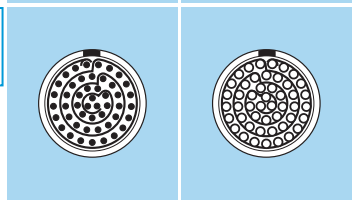	348	4B-4K	0.7	●	●	●	–	22	32	22	0.70	0.70	1.00	1.00	1.5
48	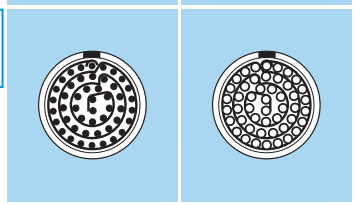	348	5B-5K	1.3	●	●	●	–	20	26	18	1.20	1.10	2.00	1.55	6.0
50	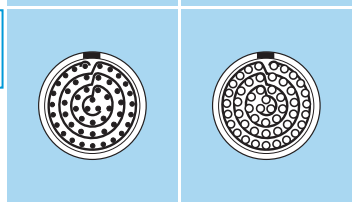	350	5B-5K	0.9	●	●	●	–	22	32	20	1.30	1.60	1.20	1.45	6.0

● First choice alternative
○ Special order alternative

Note: [1] see calculation method, caution and suggested standard on page 190.
[2] test voltage (kV) contact-shell is slightly lower for K and T series (values here are for B series).

Multipole

	Solder contacts / Crimp contacts		Reference	Series	Contact ø (mm)	Contact type				AWG			Solder contact		Crimp contact		Rated current (A)[1]
						Solder	Crimp	Print (straight)	Print (elbow)	Solder (max.)	Crimp min.	Crimp max.	Test voltage (kV rms)[1] Contact-contact	Test voltage (kV rms)[2] Contact-shell	Test voltage (kV rms)[1] Contact-contact	Test voltage (kV rms)[2] Contact-shell	
54			**354**	5B-5K	0.9	●	●	●	–	22	32	20	1.15	1.55	2.00	2.10	5.0
64			**364**	5B-5K	0.9	●	●	●	–	22	32	20	1.30	1.55	1.35	1.85	3.0

● First choice alternative
○ Special order alternative

Note: [1] see calculation method, caution and suggested standard on page 190.
[2] test voltage (kV) contact-shell is slightly lower for K and T series (values here are for B series).

Housings (B, K and T series)

Ref.	Outer shell and collet nut		Latch sleeve + earthing crown		Other metallic components		Remarks	Note
	Material	Surf. treatment	Material	Surf. treatment	Material	Surf. treatment		
C	Brass	chrome	brass/bronze	nickel 2)	brass	nickel		●
N	Brass	nickel	brass/bronze	nickel 2)	brass	nickel		○
K	Brass	black chrome 3)	brass/bronze	nickel 2)	brass	nickel		●
S	Stainless steel	–	brass/bronze	nickel 2)	brass	nickel		●
T	Stainless steel	–	stainless steel	–	brass	nickel		○
U	Stainless steel	–	stainless steel	–	stainless steel	–		○
L	Aluminium alloy	anodized	brass/bronze	nickel 2)	brass	nickel	1)	○
X	Aluminium alloy	nickel anthracite	brass/bronze	nickel 2)	brass	nickel		○
G	PEEK (natural)	–	brass/bronze	nickel 2)	brass	nickel	Only for FGG and ENG (B series)	●
P	PSU	–	brass/bronze	nickel 2)	brass	nickel	Only for FGY and ENY (B series) 1)	●
R	PPSU	–	brass/bronze	nickel 2)	brass	nickel	Only for FGY and ENY (B series) 1)	●
H	PPS/brass	–/nickel	brass/bronze	nickel 2)	brass	nickel	Only for elbow sockets (B series)	●
P	PA.6	–	brass/bronze	nickel 2)	brass	nickel	Only for CRF and CRG bridge plug 1)	●

Note: detailed characteristics of these materials and treatments are presented on page 182.
1) see «variant» for the colour.
2) in the K series, the latch sleeve is chrome-plated.
3) surface not conductive use socket with earthing tag (EN● and HM● model) to carry shield.

● First choice alternative
○ Special order alternative

Insulators (B, K and T series)

Ref.	Material	Contact type	Remarks	Note
Y	PEEK	Crimp	extended design, with contacts that recess into insulator	●
L	PEEK	Solder or print		●

Note: detailed characteristics of these materials are presented on page 187.

Contacts (B, K and T series)

Soldering characteristics

- no need to order specific tools, a simple soldering iron is sufficient
- ideal for very small and fragile conductors
- contacts with solder cups to allow the solder to flow

Note: see page 188 for more information.

Crimping characteristics

- practical, quick contact fixing outside the insulator
- possible use at high temperature
- need to order specific tools
- no risk of heating the insulator during the conductor-contact fixing
- high tensile strength
- totally lead-free solution

Contacts reference for couplers R●●, S●● and TGL

Ref.	Contact type	Remarks
A	Male - Female	contact configuration is explained on page 24, 33, 48
L	Female - Male	contact configuration is explained on page 24, 33, 48
M	Female - Female	contact configuration is explained on page 24

Contacts reference for plugs, free or fixed sockets

Contact type	Reference		Contact			Conductor						F_r [1] (N)	Notes
						Solid		Stranded					
								AWG		Section (mm²)			
	Male	Female	ø A (mm)	ø C (mm)	Form per fig.	AWG max.	Section max. (mm²)	min.	max.	min.	max.		
Solder 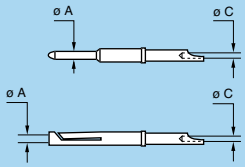	**A**	**L**	0.35	0.40	–	28	0.09	–	30	–	0.05	–	●
			0.5[2]	0.40[2]	–	28	0.09	–	30	–	0.05	–	
			0.5	0.45[6]	–	28	0.09	–	28	–	0.09	–	
			0.7	0.80	–	22	0.34	–	22[3]	–	0.34	–	
			0.9	0.80[5]	–	22[5]	0.34[5]	–	22[3][5]	–	0.34[5]	–	
			1.3	1.00	–	20	0.50	–	20[3]	–	0.50	–	
			1.6	1.40	–	16	1.00	–	18	–	1.00	–	
			2.0	1.80	–	14	1.50	–	16	–	1.50	–	
			3.0	2.70	–	10	4.00	–	12	–	4.00	–	
			4.0	3.70	–	10	6.00	–	10	–	6.00	–	
			6.0	5.20	–	–	–	–	8	–	10.00	–	
Crimp fig. 1 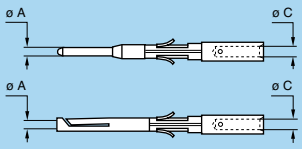	**C**	**M**	0.5[4]	0.45	1	–	–	32	28	0.035	0.09	12	●
	C	**M**	0.7	0.80	1	–	–	26	22[3]	0.140	0.34	22	●
	B	**P**	0.7	0.45	2	–	–	32	28	0.035	0.09	22	○
	C	**M**	0.9	1.10	1	–	–	24	20	0.250	0.50	30	●
	B	**P**	0.9	0.80	2	–	–	26	22[3]	0.140	0.34	30	○
	G	**U**	0.9	0.45	2	–	–	32	28	0.035	0.09	30	○
	C	**M**	1.3	1.40	1	–	–	20	18	0.500	1.00	40	●
	B	**P**	1.3	1.10	2	–	–	24	20	0.250	0.50	40	○
	G	**U**	1.3	0.80	2	–	–	26	22[3]	0.140	0.34	40	○
fig. 2 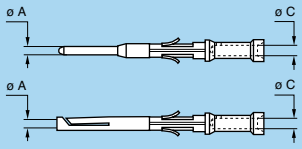	**C**	**M**	1.6	1.90	1	–	–	18	14[3]	1.000	1.50	50	●
	B	**P**	1.6	1.40	2	–	–	22	18	0.340	1.00	50	○
	C	**M**	2.0	2.40	1	–	–	16	12[3]	1.500	2.50	65	●
	B	**P**	2.0	1.90	2	–	–	18	14	1.000	1.50	65	○
	C	**M**	3.0	3.20	1	–	–	14	10[3]	2.500	4.00	75	●
	C	**M**	4.0	4.00	1	–	–	12	10	4.000	6.00	90	●

Note:
[1] contact retention force in the insulator (according to IEC 60512-8 test 15 a).
[2] for 00/TT multipole series.
[3] for a given AWG, the diameter of some stranded conductor designs is larger than the solder cup diameter. Make sure that the maximum conductor diameter is smaller than ø C.
[4] for 00 /TT multipole series or for 0B/0T and 1B/1T series with male contacts.
[5] for 0B.302/0B.303, 0K.302/0K.303 and 0T.302/0T.303 ø C = 1.0 mm, AWG max 20, section max (mm²) 0.50.
[6] for 00/TT and 1B/1K/1T series, according to manufacturing and plating tolerance ø C min = 0.43 mm.

● First choice alternative ○ Special order alternative

Contacts reference for plugs, free or fixed sockets

Contact type	Reference		Contact			Conductor						F_r [1] (N)	Notes
						Solid		Stranded					
								AWG		Section (mm²)			
	Male	Female	ø A (mm)	ø C (mm)	Form per fig.	AWG max.	Section max. (mm²)	min.	max.	min.	max.		
Print 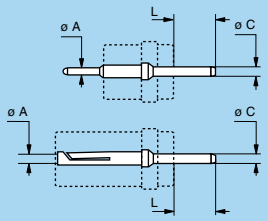	D	N	L dimensions and C are detailed in the section on PCB drilling pattern. See page 163.										●
Print (elbow) 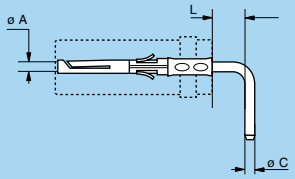	V	V	L dimensions and C are detailed in the section on PCB drilling pattern. See page 164.										●

Note: [1] contact retention force in the insulator (according to IEC 60512-8 test 15 a).

● First choice alternative ○ Special order alternative

Collets (B, K and T series)

D and M type collets for B series

D type

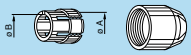

M type

	Reference		Collet ø		Cable ø		Notes
	Type	Code	ø A	ø B	max.	min.	
00	D	22	2.2	–	2.2	1.4	
	D	27	2.7	–	2.7	> 2.2	
	D	35	3.5	2.8	3.5	> 2.7	8)
0B	D	22	2.1	–	2.2	1.4	2)
	D	32	3.2	–	3.2	> 2.2	
	D	42	4.2	–	4.2	> 3.2	
	D	52	5.2	4.7	5.2	> 4.2	8)
	D	56	5.6	4.7	5.6	> 5.2	1) 8)
1B	M	27	2.7	–	2.7	> 2.2	
	M	31	3.1	–	3.1	> 2.7	
	D	42	4.2	–	4.2	3.1	
	D	52	5.2	–	5.2	> 4.2	
	D	62	6.2	–	6.2	> 5.2	
	D	72	7.2	6.2	7.2	> 6.2	8)
	D	76	7.6	6.9	7.6	> 7.2	1) 8)
XB	D	52	5.2	7.2	5.0	4.4	
	D	62	6.2	7.2	6.0	5.4	
	D	72	7.2	7.2	7.0	6.4	
	D	82	8.2	7.2	8.0	7.4	1)
2B	M	21	2.1	–	2.2	1.4	3)
	M	32	3.1	–	3.2	> 2.2	3)
	D	42	4.2	–	4.2	> 3.2	
	D	52	5.2	–	5.2	> 4.2	
	D	62	6.2	–	6.2	> 5.2	
	D	72	7.2	–	7.2	> 6.2	
	D	82	8.2	–	8.2	> 7.2	
	D	92	9.2	8.6	9.2	> 8.2	8)
	D	99	9.9	8.6	9.9	> 9.2	1) 8)

	Reference		Collet ø		Cable ø		Notes
	Type	Code	ø A	ø B	max.	min.	
3B	M	52	5.2	–	5.2	> 4.2	4)
	D	62	6.2	–	6.2	4.9	
	D	72	7.7	–	7.7	> 6.2	
	D	92	9.2	–	9.2	> 7.7	
	D	10	10.2	–	10.0	> 9.2	
	D	11	11.0	–	11.0	> 10.0	
	D	12	12.0	10.2	12.0	> 11.0	1) 8)
4B	M	62	6.2	–	6.2	> 5.2	5)
	M	72	7.2	–	7.2	> 6.2	5)
	M	82	8.2	–	8.2	> 7.2	5)
	M	92	9.2	8.6	9.2	> 8.2	6)
	D	10	10.8	–	10.5	9.1	
	D	12	12.3	–	12.0	10.6	
	D	13	13.8	12.5	13.5	12.1	
	D	15	15.3	12.5	15.0	13.6	7)
	D	16	16.3	12.5	16.0	15.1	1)
5B	D	11	11.8	–	11.5	9.6	
	D	13	13.8	–	13.5	11.6	
	D	15	15.8	–	15.5	13.6	7)
	D	17	17.8	–	17.5	15.6	1)
	D	19	19.8	–	19.5	17.6	1)
	D	21	21.8	–	21.5	19.6	1)
	D	23	23.8	21.8	23.5	21.6	1)
	D	25	25.3	21.8	25.0	23.6	1)

Note: all dimensions are in millimetres.
1) these collets cannot be used for connector models with nut for fitting a bend relief. No bend relief available for this cable size.
2) the inner diameter of the smallest bend relief available is 2.5 mm (in TPU) / 1.7 mm (in silicone).
3) for 0B bend relief.
4) for 1B bend relief.
5) for 2B bend relief.
6) for 4B bend relief.
7) the inner diameter of the largest bend relief available is 14.5 mm.
8) for FSG model, standard cable diameter reduced as follow: 0B series (D52) = 4.7 mm, 2B series (D92) = 8.6 mm. For larger diameter use a “K” type collet, please check online Part Search for additional details.

C and K type collets for K series

C type

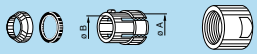

K type
oversize
cable collet

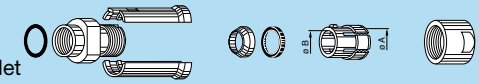

	Reference		Collet ø		Cable ø		Notes
	Type	Code	ø A	ø B	max.	min.	
0K	C	10	1.6	–	1.2	1.0	1)
	C	15	1.6	–	1.5	1.3	1)
	C	20	2.1	–	2.0	1.6	1)
	C	25	3.1	–	2.5	2.1	
	C	30	3.1	–	3.0	2.6	
	C	35	4.2	4.2	3.5	3.1	
	C	40	4.2	4.2	4.0	3.6	
	C	45	5.2	5.2	4.5	4.1	
	C	50	5.2	5.2	5.0	4.6	
1K	C	15	1.6	–	1.5	1.3	
	C	20	2.2	–	2.0	1.6	
	C	25	3.2	–	2.5	2.1	
	C	30	3.2	–	3.0	2.6	
	C	35	4.2	–	3.5	3.1	
	C	40	4.2	–	4.0	3.6	
	C	45	5.2	–	4.5	4.1	
	C	50	5.2	–	5.0	4.6	
	C	55	6.2	6.2	5.5	5.1	
	C	60	6.2	6.2	6.0	5.6	
	C	65	7.2	6.7	6.5	6.1	
	K	70	7.2	–	7.0	6.6	3)
	K	75	8.2	8.2	7.5	7.1	3)
	K	80	8.2	8.2	8.0	7.6	3)
	K	85	9.2	8.6	8.5	8.1	3)
2K	C	15	2.2	–	1.5	1.3	
	C	20	2.2	–	2.0	1.6	
	C	25	3.2	–	2.5	2.1	
	C	30	3.2	–	3.0	2.6	
	C	35	4.2	–	3.5	3.1	
	C	40	4.2	–	4.0	3.6	
	C	45	5.2	–	4.5	4.1	
	C	50	5.2	–	5.0	4.6	
	C	55	6.2	–	5.5	5.1	
	C	60	6.2	–	6.0	5.6	
	C	65	7.2	–	6.5	6.1	

	Reference		Collet ø		Cable ø		Notes
	Type	Code	ø A	ø B	max.	min.	
2K	C	70	7.2	–	7.0	6.6	
	C	75	8.2	8.2	7.5	7.1	
	C	80	8.2	8.2	8.0	7.6	
	C	85	9.2	8.6	8.5	8.1	
	K	90	9.2	–	9.0	8.6	4)
	K	95	10.2	10.2	9.5	9.1	4)
	K	10	10.2	10.2	10.0	9.6	4)
	K	11	11.2	10.6	10.5	10.1	4)
3K	C	30	3.2	–	3.0	2.6	
	C	35	4.2	–	3.5	3.1	
	C	40	4.2	–	4.0	3.6	
	C	45	5.2	–	4.5	4.1	
	C	50	5.2	–	5.0	4.6	
	C	55	6.2	–	5.5	5.1	
	C	60	6.2	–	6.0	5.6	
	C	65	7.2	–	6.5	6.1	
	C	70	7.2	–	7.0	6.6	
	C	75	8.2	–	7.5	7.1	
	C	80	8.2	–	8.0	7.6	
	C	85	9.2	–	8.5	8.1	
	C	90	9.2	–	9.0	8.6	
	C	95	10.2	10.2	9.5	9.1	
	C	10	10.2	10.2	10.0	9.6	
	C	11	11.2	10.6	10.5	10.1	
	K	11	12.3	–	12.0	10.6	5)
	K	12	13.8	13.8	12.8	12.1	5)
	K	13	13.8	13.8	13.5	12.9	5)
	K	14	15.3	15.3	14.0	13.6	5)
	K	15	15.3	15.3	15.0	14.1	2)

Note: all dimensions are in millimetres.
1) the inner diameter of the smallest bend relief available is 2.5 mm (in TPU) / 1.7 mm (in silicone).
2) the inner diameter of the largest bend relief available is 14.5 mm.
3) for 2B bend relief.
4) for 3B bend relief.
5) for 4B bend relief.

C and K type collets for K series

C type

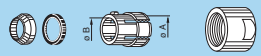

K type
oversize
cable collet

C type

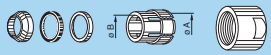

4K

Reference		Collet ø		Cable ø		Notes
Type	Code	ø A	ø B	max.	min.	
C	50	6.3	–	5.0	4.8	
C	55	6.3	–	5.5	5.1	
C	60	6.3	–	6.0	5.6	
C	65	7.3	–	6.5	6.1	
C	70	7.3	–	7.0	6.6	
C	75	8.3	–	7.5	7.1	
C	80	8.3	–	8.0	7.6	
C	85	9.3	–	8.5	8.1	
C	90	9.3	–	9.0	8.6	
C	95	10.8	–	9.5	9.1	
C	10	10.8	–	10.5	9.6	
C	11	12.3	–	12.0	10.6	
C	12	13.8	13.8	12.8	12.1	
C	13	13.8	13.8	13.5	12.9	
C	14	15.3	15.3	14.0	13.6	
C	15	15.3	15.3	15.0	14.1	2)
K	16	17.8	–	16.5	15.6	1)
K	17	17.8	–	17.5	16.6	1)
K	18	19.8	–	18.5	17.6	1)
K	19	19.8	–	19.5	18.6	1)
K	20	21.8	–	20.5	19.6	1)
K	21	21.8	–	21.5	20.6	1)
K	22	23.8	23.8	22.5	21.6	1)
K	23	23.8	23.8	23.5	22.6	1)

5K

Reference		Collet ø		Cable ø		Notes
Type	Code	ø A	ø B	max.	min.	
C	10	11.8	–	10.5	9.6	
C	11	11.8	–	11.5	10.6	
C	12	13.8	–	12.5	11.6	
C	13	13.8	–	13.5	12.6	
C	14	15.8	–	14.5	13.6	
C	15	15.8	–	15.5	14.6	1)
C	16	17.8	–	16.5	15.6	1)
C	17	17.8	–	17.5	16.6	1)
C	18	19.8	–	18.5	17.6	1)
C	19	19.8	–	19.5	18.6	1)
C	20	21.8	–	20.5	19.6	1)
C	21	21.8	–	21.5	20.6	1)
C	22	23.8	23.8	22.5	21.6	1)
C	23	23.8	23.8	23.5	22.6	1)

Note: all dimensions are in millimetres.
1) these collets cannot be used for connector models with nut for fitting a bend relief. No bend relief available for this cable size.
2) the inner diameter of the largest bend relief available is 14.5 mm.

C and K type collets for T series

C type

K type
oversize cable collet

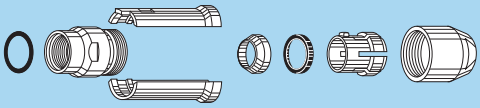

	Type	Cable ø (mm) min.	Cable ø (mm) max.	Note
TT	C27	2.4	2.6	
	C31	2.7	3.0	
0T	C10	1.0	1.2	1)
	C15	1.3	1.5	1)
	C20	1.6	2.0	1)
	C25	2.1	2.5	
	C30	2.6	3.0	
	C35	3.1	3.5	
	C40	3.6	4.0	
	C45	4.1	4.5	
	K50	4.6	5.0	2)
	K55	5.1	5.5	2)
	K60	5.6	6.0	2)
	K65	6.1	6.5	2)
1T	C15	1.3	1.5	
	C20	1.6	2.0	
	C25	2.1	2.5	
	C30	2.6	3.0	
	C35	3.1	3.5	
	C40	3.6	4.0	
	C45	4.1	4.5	
	C50	4.6	5.0	
	C55	5.1	5.5	
	C60	5.6	6.0	
	C65	6.1	6.5	
	K70	6.6	7.0	3)
	K75	7.1	7.5	3)
	K80	7.6	8.0	3)
	K85	8.1	8.5	3)

	Type	Cable ø (mm) min.	Cable ø (mm) max.	Note
2T	C15	1.3	1.5	
	C20	1.6	2.0	
	C25	2.1	2.5	
	C30	2.6	3.0	
	C35	3.1	3.5	
	C40	3.6	4.0	
	C45	4.1	4.5	
	C50	4.6	5.0	
	C55	5.1	5.5	
	C60	5.6	6.0	
	C65	6.1	6.5	
	C70	6.6	7.0	
	C75	7.1	7.5	
	C80	7.6	8.0	
	C85	8.1	8.5	
	K90	8.6	9.0	4)
	K95	9.1	9.5	4)
	K10	9.6	10.0	4)
	K11	10.1	10.5	4)

	Type	Cable ø (mm) min.	Cable ø (mm) max.	Note
3T	C30	2.6	3.0	
	C35	3.1	3.5	
	C40	3.6	4.0	
	C45	4.1	4.5	
	C50	4.6	5.0	
	C55	5.1	5.5	
	C60	5.6	6.0	
	C65	6.1	6.5	
	C70	6.6	7.0	
	C75	7.1	7.5	
	C80	7.6	8.0	
	C85	8.1	8.5	
	C90	8.6	9.0	
	C95	9.1	9.5	
	C10	9.6	10.0	
	C11	10.1	10.5	
	K11	10.6	12.0	
	K12	12.1	12.8	
	K13	12.9	13.5	
	K14	13.6	14.0	
	K15	14.1	15.0	5)

Note: all dimensions are in millimetres.
1) the inner diameter of the smallest bend relief available is 2.5 mm (in TPU) / 1.7 mm (in silicone).
2) for 1B bend relief.
3) for 2B bend relief.
4) for 3B bend relief.
5) the inner diameter of the largest bend relief available is 14.5 mm.

Variant (B, K and T series)

Bend relief for B series models with collet

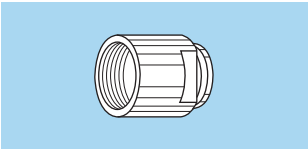

Need to be ordered

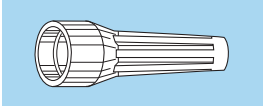

	Ref.	Collet Type	Collet Code	Need to be ordered separately (see pages 145 and 146)
00	z	D	22 to 35	GMA.00.●●●.●● GMB.00.●●●.●●
0B	z	D	22 to 52	GMA.0B.●●●.●●
1B	z	M	27 and 31	GMA.1B.●●●.●●
		D	42 to 72	GMA.1B.●●●.●●
XB	z	D	52 to 72	GMA.1B.●●●.●●
2B	z	M	21 and 32	GMA.0B.●●●.●●
		D	42 to 92	GMA.2B.●●●.●●
3B	z	M	52	GMA.1B.●●●.●●
		D	62 to 10	GMA.3B.●●●.●●
4B	z	M	62 to 82	GMA.2B.●●●.●●
		M	92	GMA.4B.●●●.●●
		D	10 to 15 [1]	GMA.4B.●●●.●●
5B	z	D	11 to 15 [1]	GMA.4B.●●●.●●

Bend relief for K series models with collet

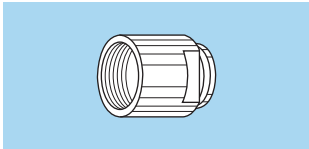

Need to be ordered

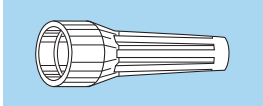

	Ref.	Collet Type	Collet Code	Need to be ordered separately (see pages 145 and 146)
0K	z	C	10 to 50	GMA.0B.●●●.●●
1K	z	C	15 to 65	GMA.1B.●●●.●●
		K	70 to 85	GMA.2B.●●●.●●
2K	z	C	15 to 85	GMA.2B.●●●.●●
		K	90 to 10	GMA.3B.●●●.●●
3K	z	C	30 to 10	GMA.3B.●●●.●●
		K	11 to 15 [2]	GMA.4B.●●●.●●
4K	z	C	50 to 15 [3]	GMA.4B.●●●.●●
5K	z	C	10 to 14	GMA.4B.●●●.●●

Note: all dimensions are in millimetres.
[1] for D15 see page 67.
[2] for K15 see page 68.
[3] for C15 see page 69.

Bend relief for T series models with collet

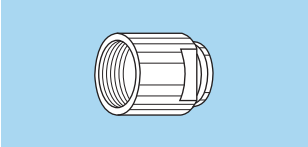

Need to be ordered

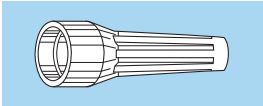

	Ref.	Collet Type	Collet Code	Need to be ordered separately (see pages 145 and 146)
TT	z	C	27 and 31	GMB.00.●●●.●●
0T	z	C	10 to 45	GMA.0B.●●●.●●
		K	50 to 65	GMA.1B.●●●.●●
1T	z	C	15 to 65	GMA.1B.●●●.●●
		K	70 to 85	GMA.2B.●●●.●●
2T	z	C	15 to 85	GMA.2B.●●●.●●
		K	90 to 10	GMA.3B.●●●.●●
3T	z	C	30 to 10	GMA.3B.●●●.●●
		K	11 to 15 [4]	GMA.4B.●●●.●●

Note: all dimensions are in millimetres.
[4] for K15 see page 70.

Colour of the bridge plug shells and connectors shell made of plastic material and aluminium alloys

Ref.	Colour	Bridge plug and plastic shell			Aluminium alloys	
		PSU	PPSU	PA.6	Anodized colour	Anodized colour for bend relief collet nut
A	blue			●	●	
B	white	●		●		
G	grey	●		●		
J	yellow			●	●	
M	brown			●		
N	black			●	●	
R	red			●	●	
S	orange			●		
T	natural				●	
V	green			●	●	
L	black					●
X	natural					●
F	cream		●			

Note: other anodizing colours are available for connectors with collet nut for bend relief. Please consult us.

Watertight and vacumtight socket and coupler models (B, K and T series) (not connected)

	Reference		Model
	Watertight	Vacuumtight	
B	P	PV	YH●, HG●, HN●, HH●, HC●, HE●, HM●, S●●
K	P	PV	HG●, HE●, S●●
T	P	PV	HG●, HE●, HM●

O-ring and gasket material (K and T series)

Standard connectors are delivered with silicone o-ring and gaskets. The vacuumtight models, identified with the letter «PV», are delivered with Viton® gaskets. Other gaskets material can be delivered upon special request.

Ref.	O-ring material
H	FPM (Viton®)
E	EPDM
D	FPM (Viton®) and collet nut for bend relief

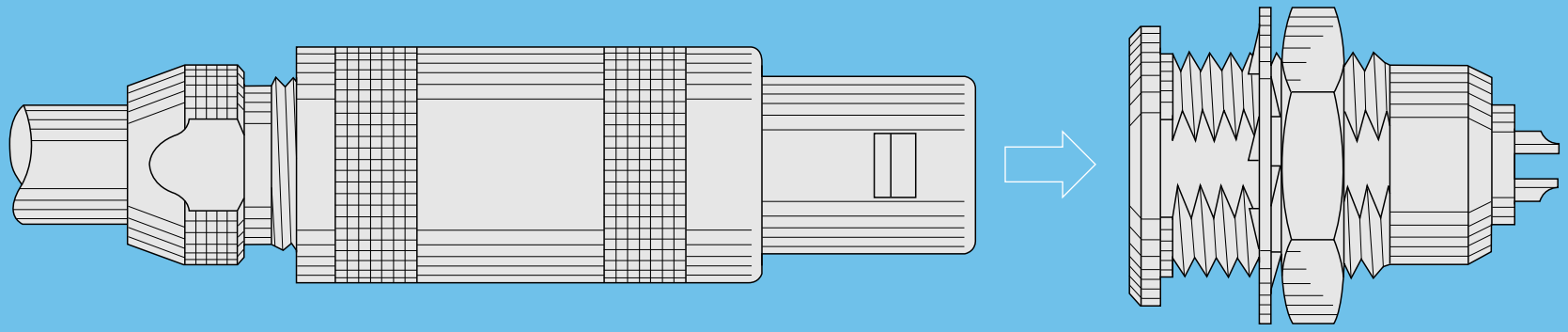

S SERIES

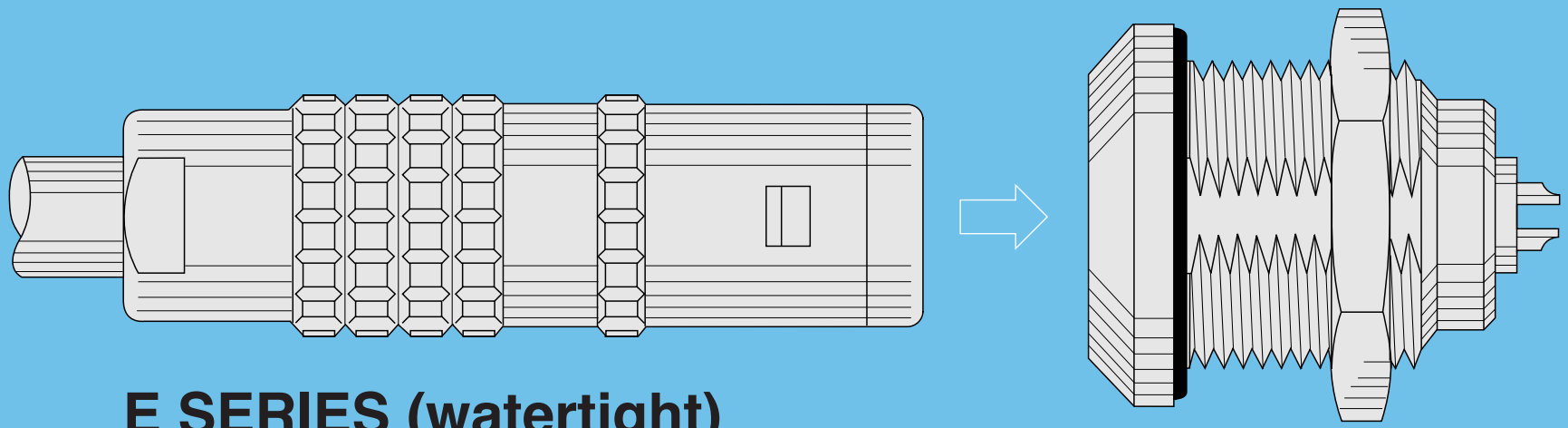

E SERIES (watertight)

S Series

S series connectors have main features as follows:
– security of the Push-Pull self-latching system
– unipole types transmitting current up to 230 A and multipole types with up to 106 contacts
– 360° screening for full EMC shielding.
– solder or print contacts (straight or elbow)
– polarisation by stepped insert (half-moon) fitted with male and female contacts

Metal housing models (page 76)

Fixed plug

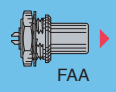
FAA

Elbow plugs

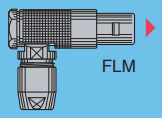
FLM

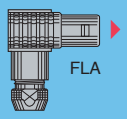
FLA

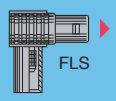
FLS

Straight plugs

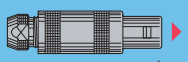
FFA, FFP*

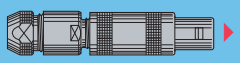
FFA

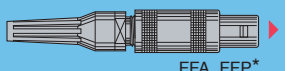
FFA, FFP*

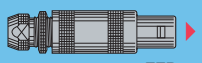
FFB

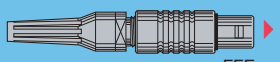
FFE

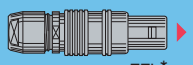
FFL*

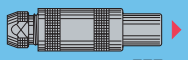
FFF

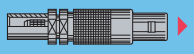
FFS

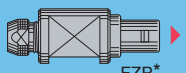
FZP*

Fixed sockets

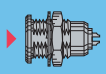
ERA

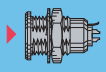
ERN

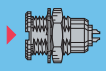
ERC

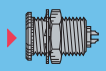
ERS*

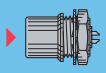
EHP

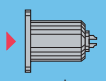
EBD*

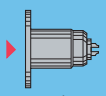
EBS*

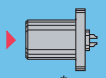
EBC*

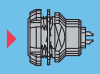
EEP

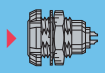
ERD

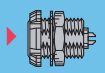
ECP

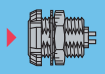
ECP

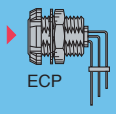
ECP

Free coupler

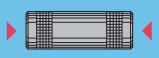
RMA

Fixed coupler

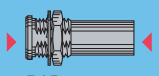
RAD

Free sockets

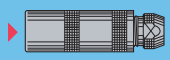
PCA, PCP*

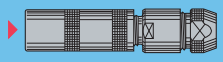
PCA

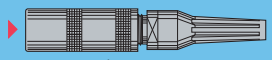
PCA, PCP*

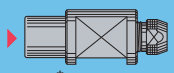
PZP*

Fixed sockets

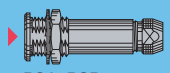
PSA, PSP

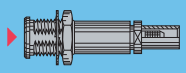
PSS

T-plug

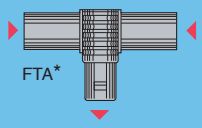
FTA*

Note: * Contact LEMO for details.

New design models (page 86)

Straight plugs

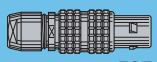
FGZ

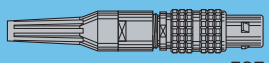
FGZ

Free sockets

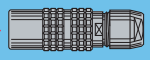
PGZ

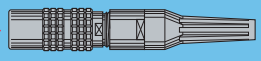
PGZ

Elbow socket models (page 87)

Elbow sockets

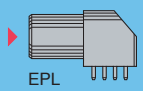
EPL

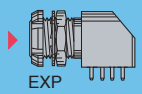
EXP

Plastic housing models (page 89)

Straight plugs

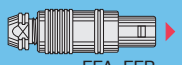
FFA, FFP

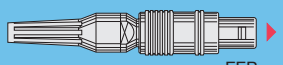
FFP

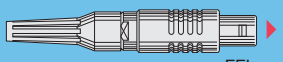
FFL

Fixed socket

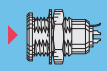
ERN

Watertight or vacuumtight models (page 91)

Fixed sockets

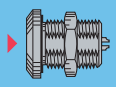
HGP

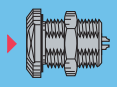
EWB

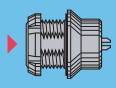
HCP

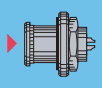
HGW

Fixed coupler

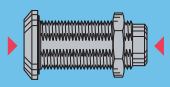
SWH

Part Numbering System

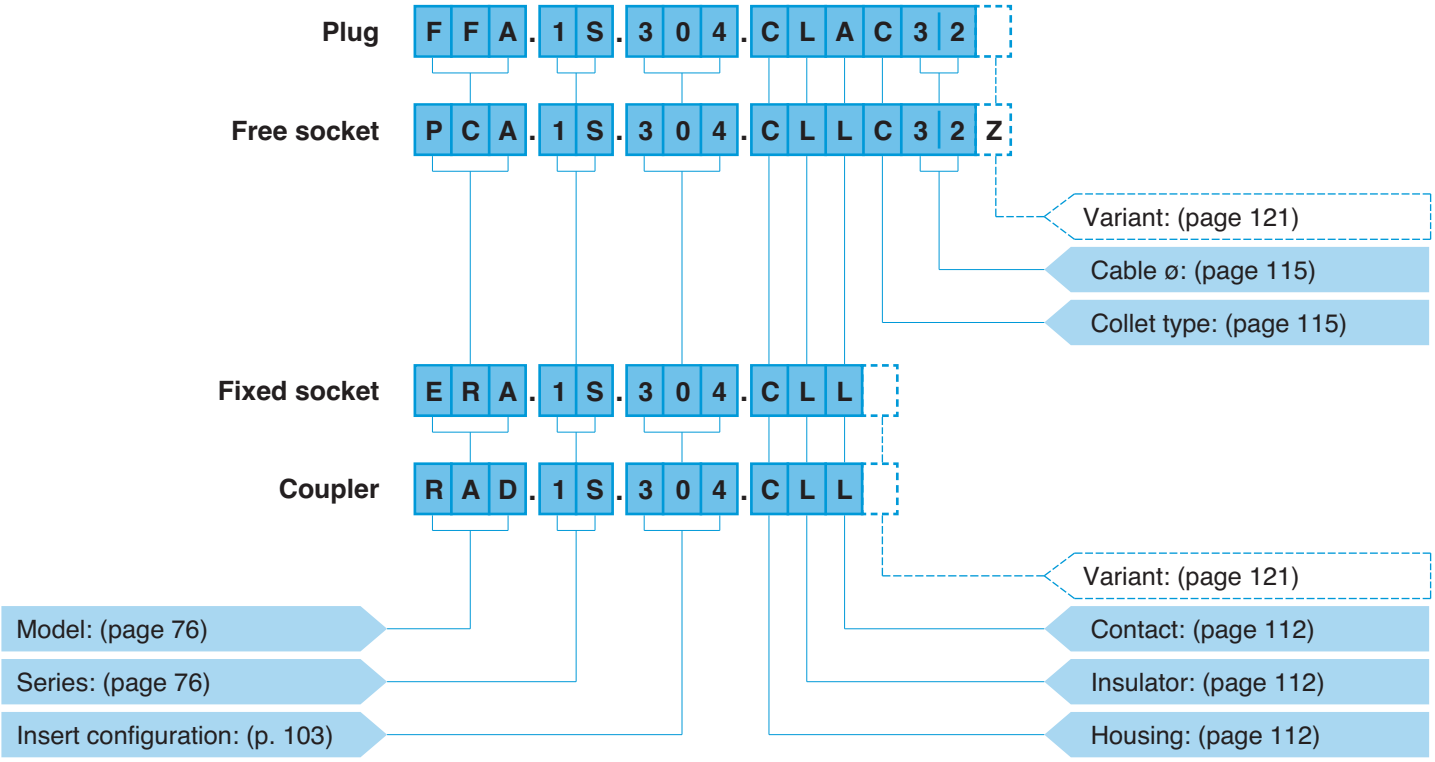

FFA.1S.304.CLAC32 = straight plug with cable collet, 1S series, multipole type with 4 contacts, outer shell in chrome-plated brass, PEEK insulator, 2 male and 2 female solder contacts, C type collet for a 3.2 mm diameter cable.

PCA.1S.304.CLLC32Z = free socket, with cable collet, 1S series, multipole type with 4 contacts, outer shell in chrome-plated brass, PEEK insulator, 2 female and 2 male solder contacts, C type collet for a 3.2 mm diameter cable and nut for fitting a bend relief.

ERA.1S.304.CLL = fixed socket, nut fixing, 1S series, multipole type with 4 contacts, outer shell in chrome-plated brass, PEEK insulator, 2 female and 2 male solder contacts.

RAD.1S.304.CLL = straight coupler, nut fixing, 1S series, multipole type with 4 contacts, outer shell in chrome-plated brass, PEEK insulator, 2 female and 2 male contacts each end.

Part Section Showing Internal Components

Fixed socket

1. outer shell
2. earthing crown
3. retaining ring
4. hexagonal nut
5. locking washer
6. insulator
7. male contact
8. female contact

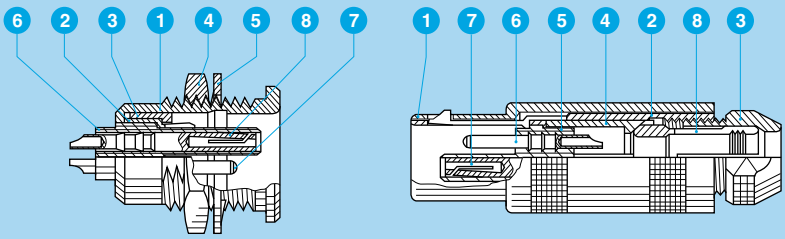

Straight plug

1. outer shell
2. latch sleeve
3. collet nut
4. centre-piece
5. insulator
6. male contact
7. female contact
8. collet

Metal housing models

Technical Characteristics

Mechanical and Climatical

Characteristics	Value	Standard
Endurance[1)]	> 5000 cycles[2)]	IEC 60512-5 test 9a
Humidity	up to 95% at 60°C	
Temperature range	- 55°C, + 250°C	
Resistance to vibrations	10-2000 Hz, 15g	IEC 60512-4 test 6d
Shock resistance	100 g, 6 ms	IEC 60512-4 test 6c
Salt spray corrosion test[3)]	> 1000h	IEC 60512-6 test 11f
Protection index (mated)	IP50	IEC 60529
Climatical category	55/175/21	IEC 60068-1

Electrical

Characteristics		Value	Standard
Shielding efficiency	at 10 MHz	> 75 dB	IEC 60169-1-3
	at 1 GHz	> 40 dB	IEC 60169-1-3

Note:
The various tests have been carried out with FFA and ERA connector pairs, with chrome-plated brass shell and PEEK insulator.
Detailed electrical characteristics, as well as materials and treatment are presented in the chapter Technical Characteristics on page 182.
1) see page 189, contact resistance after mating cycles. See page 185, mechanical endurance latching force.
2) 1000 cycles for FFE models.
3) for chrome plated product (« C » material code).

FFA Straight plug, cable collet

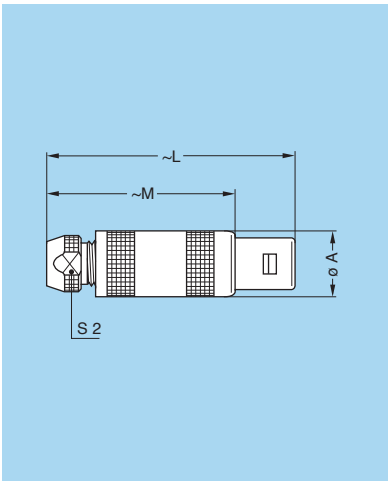

Reference		Dimensions (mm)			
Model	Series	A	L	M	S2
FFA	00	6.4	26.0	18.0	4.5
FFA	0S	9.0	34.5	24.5	6.5
FFA	1S	12.0	42.5	31.5	8.5
FFA	2S	14.8	52.0	40.0	11.0
FFA	3S	17.8	61.0	46.0	14.0
FFA	4S	24.8	77.0	59.0	19.0
FFA	5S	35.0	103.0	78.0	29.0
FFA	6S	46.0	106.0	81.0	38.0

M1 Cable assembly (pages 175 to 177)

FFA Straight plug with oversize cable collet [1)]

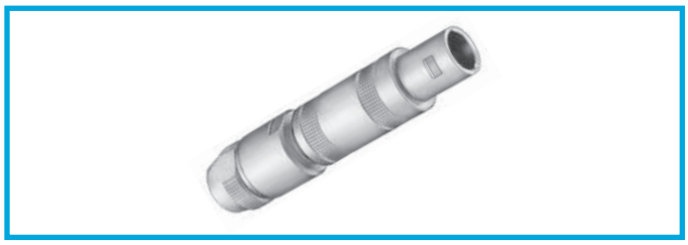

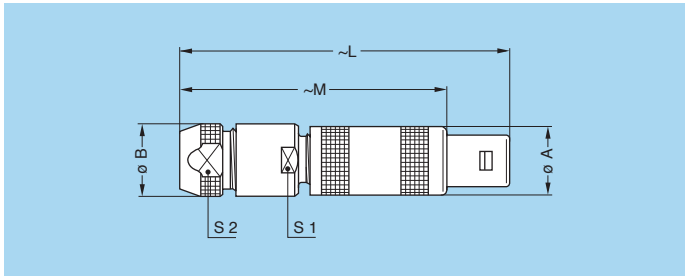

Reference		Dimensions (mm)					
Model	Series	A	B	L	M	S1	S2
FFA	00	6.4	8.0	34.0	26.0	7.0	6.5
FFA	0S	9.0	10.0	45.5	35.5	9.0	8.5
FFA	1S	12.0	13.0	57.0	46.0	12.0	11.0
FFA	2S	14.8	18.0	67.0	55.0	14.0	14.0
FFA	3S	17.8	21.0	85.0	70.0	19.0	19.0
FFA	4S	24.8	31.8	107.0	89.0	28.5	29.0
FFA	5S	35.0	41.8	138.0	113.0	37.5	38.0

M2 Cable assembly (pages 175 and 178)

Note: 1) correspond to K type of collet, the fitting of oversize collets onto this model allows them to be fitted to the cables that can be accommodated by the next housing size up (see page 115).

FFA Straight plug, cable collet and nut for fitting a bend relief [1)]

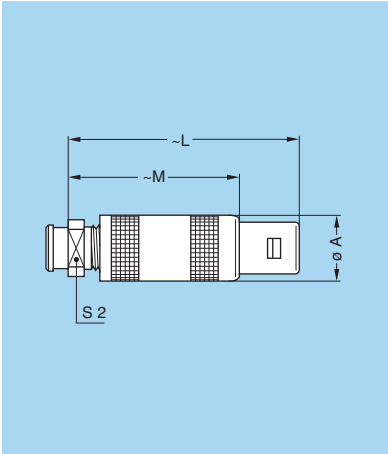

Reference		Dimensions (mm)			
Model	Series	A	L	M	S2
FFA	**00**	6.4	26.0	18.0	6
FFA	**0S**	9.0	34.5	24.5	7
FFA	**1S**	12.0	42.5	31.5	9
FFA	**2S**	14.8	52.0	40.0	12
FFA	**3S**	17.8	61.0	46.0	14
FFA	**4S**	24.8	77.0	59.0	20

M1 Cable assembly (pages 175 and 176)

Note: [1)] to order, add a «Z» at the end of the reference.
The bend relief must be ordered separately (see page 145).

FFB Straight plug, cable collet and safety locking ring

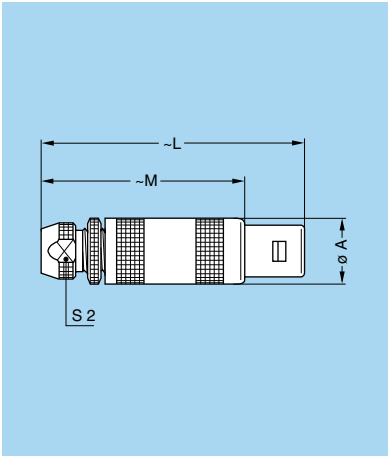

Reference		Dimensions (mm)			
Model	Series	A	L	M	S2
FFB	**0S**	9.0	36.8	26.8	6.5
FFB	**1S**	12.0	45.0	34.0	8.5
FFB	**2S**	14.8	55.5	43.5	11.0
FFB	**3S**	17.8	65.0	50.0	14.0

M1 Cable assembly (pages 175 and 176)

Note: nut for fitting a bend relief (available only for size 1S).

FFE Straight plug, cable collet, front seal and nut for fitting a bend relief [1)] (protected to IP54 when mated)

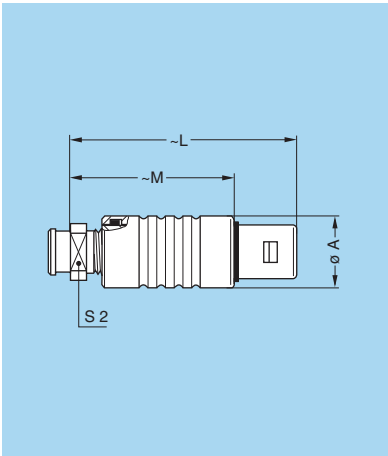

Reference		Dimensions (mm)			
Model	Series	A	L	M	S2
FFE	**00**	7.4	26.0	18.0	6
FFE	**0S**	10.0	34.5	24.5	7
FFE	**1S**	13.0	42.5	31.5	9
FFE	**2S**	16.0	52.0	40.0	12
FFE	**3S**	19.0	61.0	46.0	14

M1 Cable assembly (pages 175 and 176)

Note: [1)] to order, add a «Z» at the end of the reference.
The bend relief must be ordered separately (see page 145).

FFF Straight plug, non-latching, cable collet

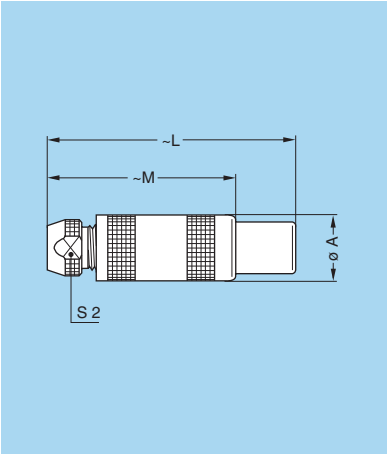

Reference		Dimensions (mm)			
Model	Series	A	L	M	S2
FFF	**00**	6.4	26.0	18.0	4.5
FFF	**0S**	9.0	34.5	24.5	6.5
FFF	**1S**	12.0	42.5	31.5	8.5
FFF	**2S**	14.8	52.0	40.0	11.0

M1 Cable assembly (pages 175 and 176)

FFS Straight plug for cable crimping

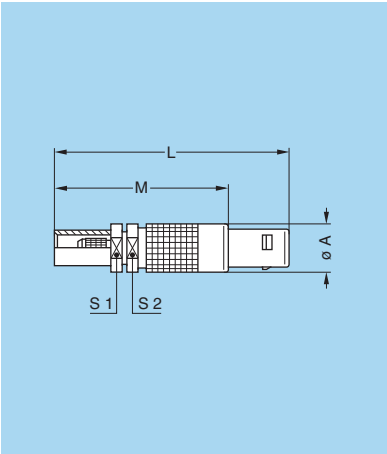

Reference		Dimensions (mm)				
Model	Series	A	L	M	S1	S2
FFS	**00**	6.4	31	23	5.5	5.5

M5 Cable assembly (page 175)

Note: Model available only with crimp backnut E31 similar to 00.250 series.

FAA Fixed plug non-latching, nut fixing

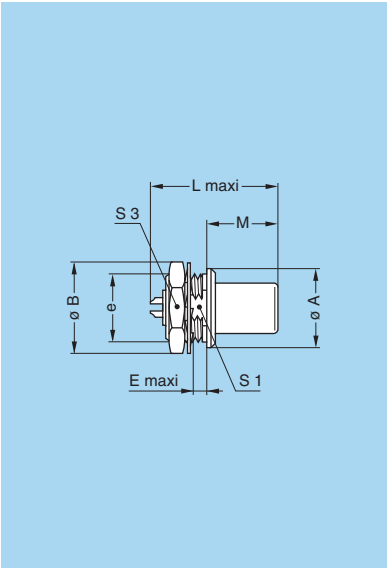

Reference		Dimensions (mm)								
Model	Series	A	B	e	E	L	L[1)]	M	S1	S3
FAA	**00**	8	10.2	M7x0.5	2.0	–	15.5	9.0	6.3	9
FAA	**0S**	10	12.4	M9x0.6	2.0	18.5	18.0	11.2	8.2	11
FAA	**1S**	14	15.8	M12x1.0	2.5	22.5	21.7	12.5	10.5	14
FAA	**2S**	18	19.2	M15x1.0	4.0	25.0	25.3	13.8	13.5	17
FAA	**3S**	22	25.0	M18x1.0	4.0	31.0	29.0	17.0	16.5	22
FAA	**4S**	28	34.0	M25x1.0	2.5	35.5	39.0	20.5	23.5	30
FAA	**5S**	40	40.0	M35x1.0	2.5	45.0	–	28.0	33.5	–
FAA	**6S**	54	54.0	M48x1.5	2.5	45.0	–	28.0	–	–

P1 Panel cut-out (page 158)

P2 Panel cut-out 6S series (page 158)

Note: [1)] unipole model

FLC/FLM Elbow (90°) plug, cable collet

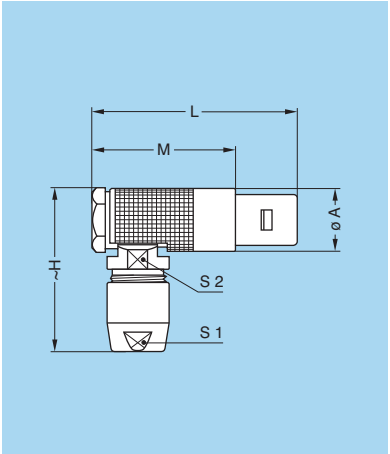

Reference		Dimensions (mm)					
Model	Series	A	H	L	M	S1	S2
FLC	**00**	7.5	16.5	19.5	11.5	4.5	6
FLM	**0S**	9.5	23.0	30.0	20.0	7.0	8
FLM	**1S**	12.0	29.0	36.0	25.0	9.0	10
FLM	**2S**	14.8	35.0	41.5	29.5	12.0	13

M3 Cable assembly (pages 175 to 177)

Note: FLC.00 model is used for the unipole type.
For 0S, 1S and 2S series use «D» type collet, see page 67.

FLA Elbow (90°) plug, cable collet

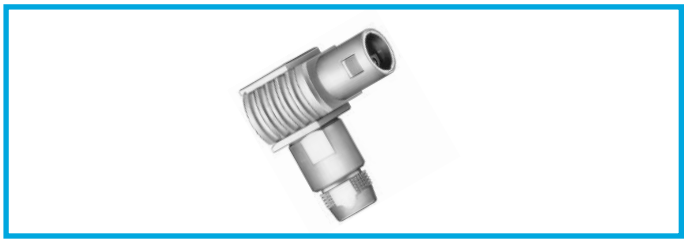

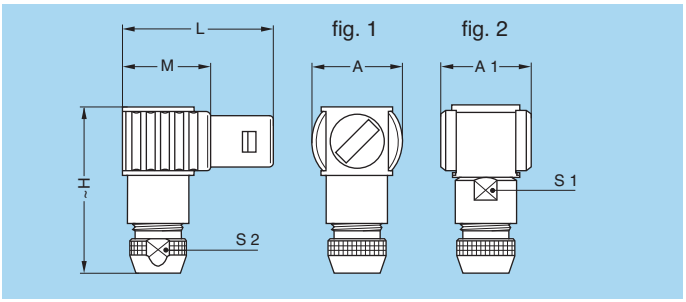

Reference		Dimensions (mm)						
Model	Series	A	A1	H	L	M	S1	S2
FLA	**3S**	21	21	44.0	38.5	23.5	15	14
FLA	**4S**	28	28	56.0	49.0	31.0	20	19
FLA	**5S**	–	37	76.5	65.0	40.0	30	29
FLA	**6S**	–	48	94.0	81.0	56.0	40	38

M3 Cable assembly (pages 175 to 177)

Note:
fig. 1 is used for the unipole type, fig. 2 is used for the multipole type.

- Maximum operating temperature: 120°C

FLS Elbow (90°) plug for cable crimping

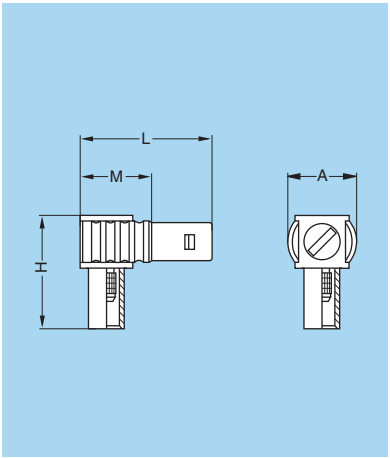

Reference		Dimensions (mm)			
Model	Series	A	H	L	M
FLS	**00**	9	16	17.5	9.5

M6 Cable assembly (page 175)

Note: Model available only with crimp backnut E31 similar to 00.250 series.

- Maximum operating temperature: 120°C

ERA Fixed socket, nut fixing

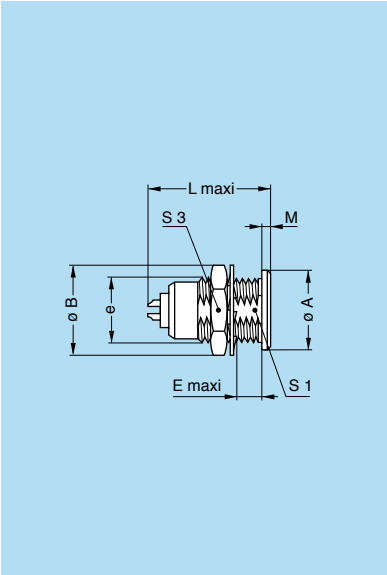

Reference		Dimensions (mm)								
Model	Series	A	B	e	E	L	L[1)]	M	S1	S3
ERA	**00**	8	10.2	M7x0.5	5.5	–	14.5	1.0	6.3	9
ERA	**0S**	10	12.4	M9x0.6	7.0	18.5	18.0	1.2	8.2	11
ERA	**1S**	14	15.8	M12x1.0	7.5	21.0	20.5	1.5	10.5	14
ERA	**2S**	18	19.2	M15x1.0	8.5	24.5	23.5	1.8	13.5	17
ERA	**3S**	22	25.0	M18x1.0	11.5	29.0	27.5	2.0	16.5	22
ERA	**4S**	28	34.0	M25x1.0	12.0	34.0	33.5	2.5	23.5	30
ERA	**5S**	40	40.0	M35x1.0	15.5	45.0	78.5	3.0	33.5	–
ERA	**6S**	54	54.0	M48x1.5	16.0	45.0	–	3.5	45.5	–

P1 Panel cut-out (page 158)

Note: [1)] unipole model.

Note: The 5S series is delivered with a tapered washer and a round nut. The 6S series is delivered without a locking washer and with a round nut.

ERN Fixed socket, nut fixing, with earthing tag

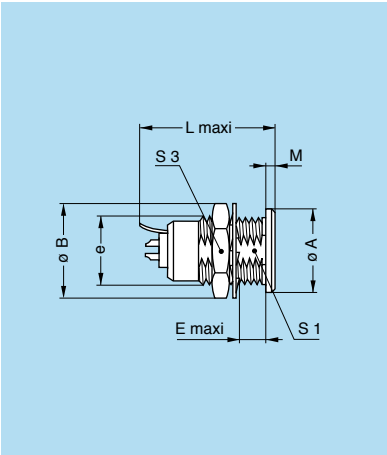

Reference		Dimensions (mm)								
Model	Series	A	B	e	E	L	L[1)]	M	S1	S3
ERN	**0S**	10	12.4	M9x0.6	7.0	19.3	19.3	1.2	8.2	11
ERN	**1S**	14	15.8	M12x1.0	7.5	22.4	22.4	1.5	10.5	14
ERN	**2S**	18	19.2	M15x1.0	8.5	26.3	26.3	1.8	13.5	17
ERN	**3S**	22	25.0	M18x1.0	11.5	29.8	29.8	2.0	16.5	22

P1 Panel cut-out (page 158)

Note: [1)] unipole model

ERC Fixed socket, nut fixing with slot in the flange

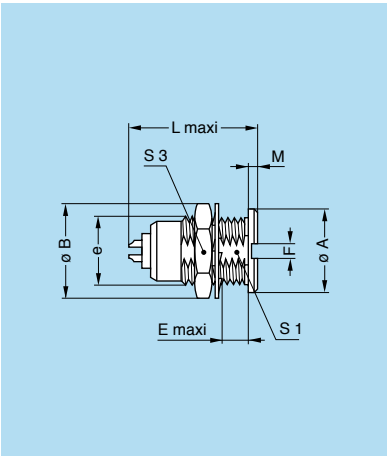

Reference		Dimensions (mm)									
Model	Series	A	B	e	E	F	L	L[1)]	M	S1	S3
ERC	**00**	8	10.2	M7x0.5	5.5	1.6	–	14.5	1.0	6.3	9
ERC	**0S**	10	12.4	M9x0.6	7.0	2.0	18.5	18.0	1.2	8.2	11
ERC	**1S**	14	15.8	M12x1.0	7.5	2.5	20.2	20.5	1.5	10.5	14

P1 Panel cut-out (page 158)

Note: [1)] unipole model.

EHP Fixed socket, nut fixing, protruding shell

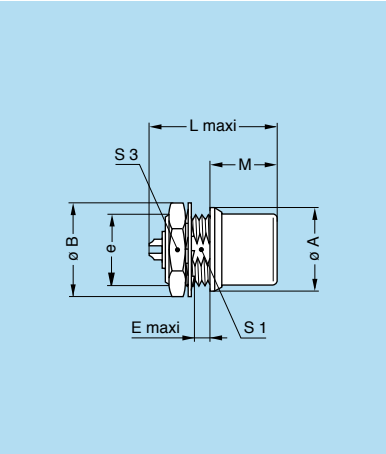

Reference		Dimensions (mm)								
Model	Series	A	B	e	E	L	L[1)]	M	S1	S3
EHP	**0S**	10	12.4	M9x0.6	2.0	20.5	18.0	12.5	8.2	11
EHP	**1S**	14	15.8	M12x1.0	3.5	20.2	20.5	12.0	–	14
EHP	**3S**	22	25.0	M18x1.0	4.0	29.0	29.0	18.7	–	22

P1 Panel cut-out 0S series (page 158)

P2 Panel cut-out (page 158)

Note: [1)] unipole model

EEP Fixed socket, nut fixing (back panel mounting)

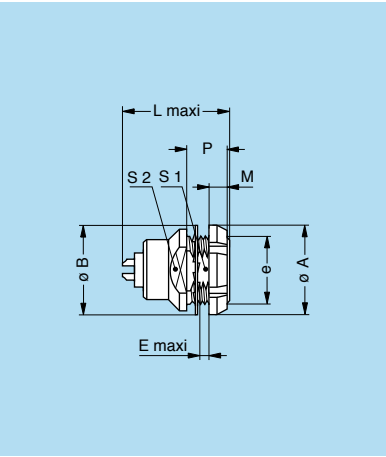

Reference		Dimensions (mm)									
Model	Series	A	B	e	E	L	L[1)]	M	P	S1	S2
EEP	**1S**	16	16.0	M12x1.0	6.5	20.2	20.5	3.5	11	10.5	13
EEP	**2S**	20	19.5	M15x1.0	4.3	24.5	23.5	3.5	9	13.5	15

P1 Panel cut-out (page 158)

Note: [1)] unipole model.

ERD Fixed socket with two nuts (back panel mounting)

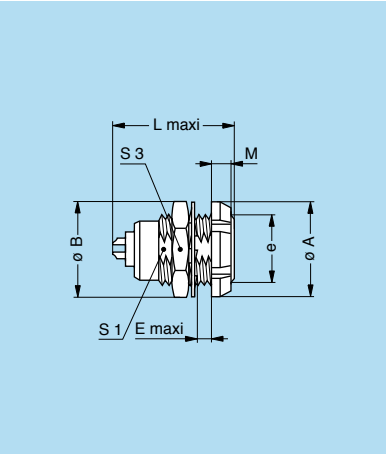

Reference		Dimensions (mm)								
Model	Series	A	B	e	E	L	L[1)]	M	S1	S3
ERD	**0S**	12	12.4	M9x0.6	5.5	18.5	18.0	2.5	8.2	11
ERD	**1S**	16	15.8	M12x1.0	6.0	20.2	20.5	3.5	10.5	14
ERD	**2S**	20	19.2	M15x1.0	6.5	24.5	23.5	3.5	13.5	17
ERD	**3S**	24	25.0	M18x1.0	9.0	29.0	27.5	4.5	16.5	22
ERD	**4S**	30	34.0	M25x1.0	10.0	34.0	33.5	4.5	23.5	30

P1 Panel cut-out (page 158)

Note: [1)] unipole model.

Note: The 3S and 4S series are delivered with a conical nut.

ECP Fixed socket with two nuts, long threaded shell (back panel mounting)

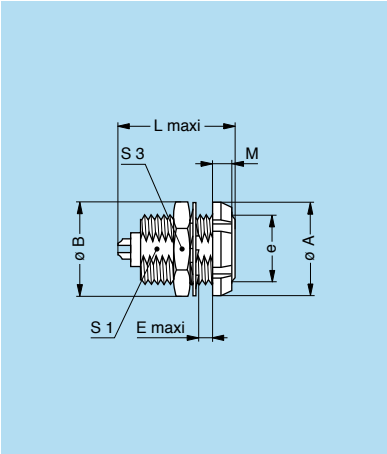

Reference		Dimensions (mm)								
Model	Series	A	B	e	E	L	L[1)]	M	S1	S3
ECP	**0S**	12	12.4	M9x0.6	8.5	18.5	18.5	2.5	8.2	11
ECP	**1S**	16	15.8	M12x1.0	10.0	20.2	20.5	3.5	10.5	14
ECP	**2S**	20	19.2	M15x1.0	11.0	24.5	26.0	3.5	13.5	17
ECP	**3S**	24	25.0	M18x1.0	14.0	29.0	30.0	4.5	16.5	22

P1 Panel cut-out (page 158)

Note: [1)] unipole model.

Note: The 3S series is delivered with a conical nut.

ECP Fixed socket with two nuts, long threaded shell, straight contact for printed circuit (back panel mounting)

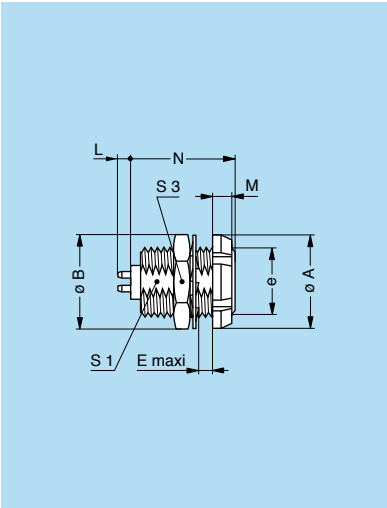

Reference		Dimensions (mm)							
Model	Series	A	B	e	E	M	N	S1	S3
ECP	**0S**	12	12.4	M9x0.6	8.5	2.5	15.0	8.2	11
ECP	**1S**	16	15.8	M12x1.0	10.0	3.5	17.5	10.5	14
ECP	**2S**	20	19.2	M15x1.0	11.0	3.5	20.0	13.5	17
ECP	**3S**	24	25.0	M18x1.0	14.0	4.5	24.0	16.5	22

P1 Panel cut-out (page 158)

P21 PCB drilling pattern (page 166)

Note: The 3S series is delivered with a conical nut.

Note: this contact type is available for all E●● socket models.
See page 167 for table of available types.
Length «L» depends on the number of contacts, see table on page 167.

ECP Fixed socket with two nuts, long threaded shell, elbow (90°) contacts for printed circuit (back panel mounting)

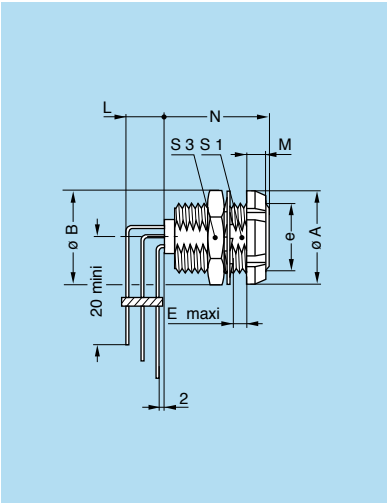

Reference		Dimensions (mm)							
Model	Series	A	B	e	E	M	N	S1	S3
ECP	**0S**	12	12.4	M9x0.6	8.5	2.5	15.0	8.2	11
ECP	**1S**	16	15.8	M12x1.0	10.0	3.5	17.5	10.5	14
ECP	**2S**	20	19.2	M15x1.0	11.0	3.5	20.0	13.5	17
ECP	**3S**	24	25.0	M18x1.0	14.0	4.5	24.0	16.5	22

P1 Panel cut-out (page 158)

P24 PCB drilling pattern (page 168)

Note: The 3S series is delivered with a conical nut.

Note: this contact type is available for all back panel mounting socket types. See page 168 for available types.
Length «L» depends on the number of contacts, see PCB drilling pattern on page 168.

PCA Free socket, cable collet

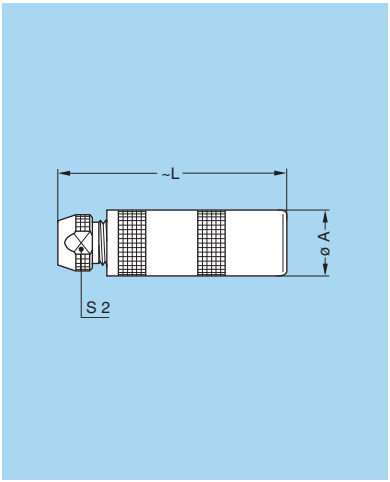

Reference		Dimensions (mm)		
Model	Series	A	L	S2
PCA	**00**	6.5	25.0	4.5
PCA	**0S**	8.9	33.5	6.5
PCA	**1S**	11.9	40.5	8.5
PCA	**2S**	14.8	50.0	11.0
PCA	**3S**	17.8	59.0	14.0
PCA	**4S**	24.8	75.0	19.0
PCA	**5S**	34.7	99.0	29.0
PCA	**6S**	46.0	102.0	38.0

M1 Cable assembly (pages 175 to 177)

PCA Free socket with oversize cable collet [1)]

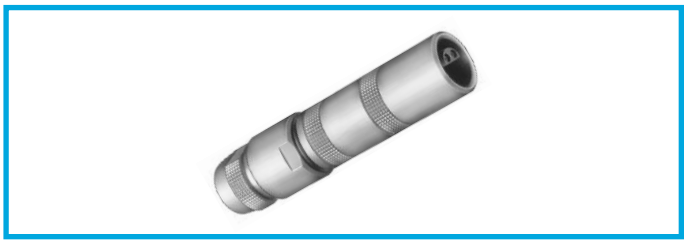

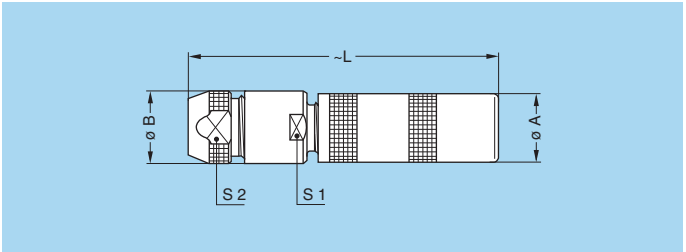

Reference		Dimensions (mm)				
Model	Series	A	B	L	S1	S2
PCA	**00**	6.5	8.0	33.0	7.0	6.5
PCA	**0S**	8.9	10.0	44.5	9.0	8.5
PCA	**1S**	11.9	13.0	55.0	12.0	11.0
PCA	**2S**	14.8	18.0	65.0	14.0	14.0
PCA	**3S**	17.8	21.0	83.0	19.0	19.0
PCA	**4S**	24.8	31.8	105.0	28.5	29.0

M2 Cable assembly (pages 175 and 178)

Note: [1)] correspond to K type of collet, the fitting of oversize collets onto this model allows them to be fitted to the cables that can be accommodated by the next housing size up (see page 115).

PCA Free socket, cable collet and nut for fitting a bend relief [1)]

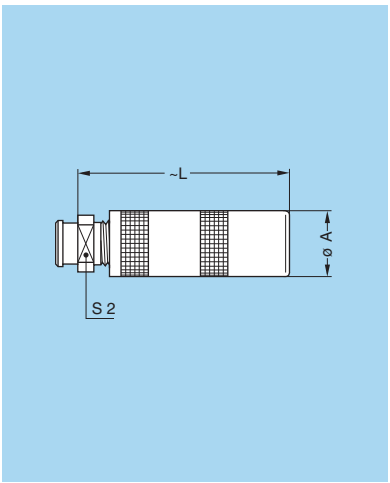

Reference		Dimensions (mm)		
Model	Series	A	L	S2
PCA	**00**	6.5	25.0	6
PCA	**0S**	8.9	33.5	7
PCA	**1S**	11.9	40.5	9
PCA	**2S**	14.8	50.0	12
PCA	**3S**	17.8	59.0	14
PCA	**4S**	24.8	75.0	20

M1 Cable assembly (pages 175 and 176)

Note: [1)] to order, add a «Z» at the end of the reference.
The bend relief must be ordered separately (see page 145).

PSA Fixed socket, nut fixing, cable collet

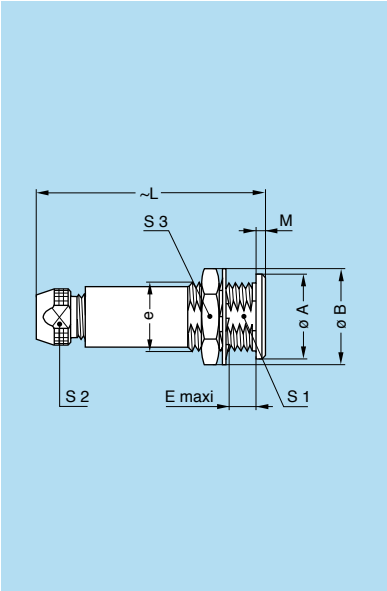

Reference		Dimensions (mm)								
Model	Series	A	B	e	E	L	M	S1	S2	S3
PSA	**00**	8	10.2	M7x0.5	5.5	25.0	1.0	6.3	4.5	9
PSA	**0S**	10	12.4	M9x0.6	7.0	33.5	1.2	8.2	6.5	11
PSA	**1S**	14	15.8	M12x1.0	7.5	40.5	1.5	10.5	8.5	14
PSA	**2S**	18	19.2	M15x1.0	8.5	50.0	1.8	13.5	11.0	17
PSA	**3S**	22	25.0	M18x1.0	11.5	59.0	2.0	16.5	14.0	22
PSA	**4S**	28	34.0	M25x1.0	12.0	75.0	2.5	23.5	19.0	30
PSA	**5S**	40	40.0	M35x1.0	15.5	99.0	3.0	33.5	29.0	–
PSA	**6S**	54	54.0	M48x1.5	16.0	102.0	3.5	45.5	38.0	–

M1 Cable assembly (pages 175 to 177)

P1 Panel cut-out (page 158)

Note: the 5S series is delivered with a tapered washer and a round nut. The 6S series is delivered without a locking washer and with a round nut.

PSP Fixed socket, nut fixing, cable collet and inner anti-rotating device

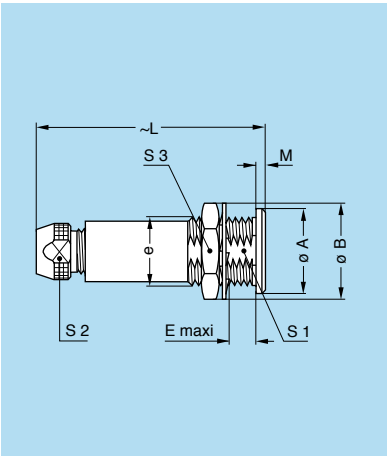

Reference		Dimensions (mm)								
Model	Series	A	B	e	E	L	M	S1	S2	S3
PSP	**2S**	18	19.2	M15x1.0	8.5	50.0	1.8	13.5	11.0	17
PSP	**3S**	22	25.0	M18x1.0	11.5	59.0	2.0	16.5	14.0	22
PSP	**4S**	28	34.0	M25x1.0	12.0	75.0	2.5	23.5	19.0	30

M1 Cable assembly (pages 175 and 176)

P1 Panel cut-out (page 158)

PSS Fixed socket, nut fixing for cable crimping

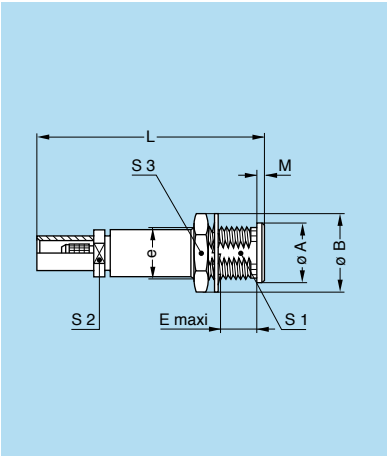

Reference		Dimensions (mm)								
Model	Series	A	B	e	E	L	M	S1	S2	S3
PSS	**00**	8	10.2	M7x0.5	5.5	30	1	6.3	5.5	9

M5 Cable assembly (page 175)

P1 Panel cut-out (page 158)

Note: Model available only with crimp backnut E31 similar to 00.250 series.

RMA Free coupler

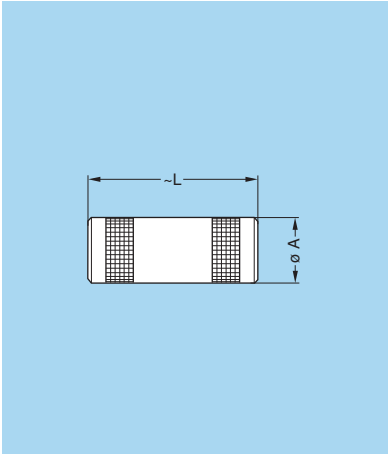

Reference		Dim. (mm)	
Model	Series	A	L
RMA	**00**	6.4	22.0
RMA	**0S**	8.9	25.0
RMA	**1S**	11.9	28.5
RMA	**2S**	14.8	31.5
RMA	**3S**	17.8	38.5
RMA	**4S**	24.8	46.5
RMA	**5S**	34.7	60.5

Note: see page 114 for the available plug and contact configurations and in order to ensure correct contact alignment.

RAD Fixed coupler, nut fixing

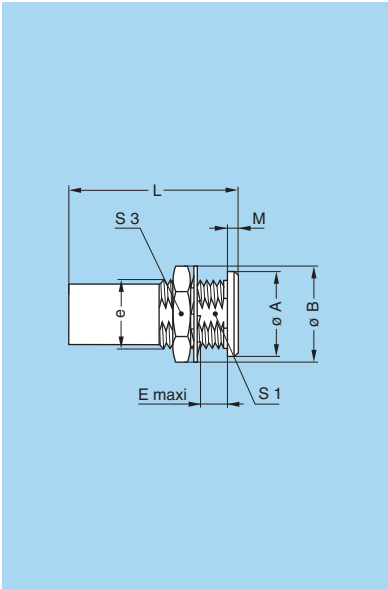

Reference		Dimensions (mm)							
Model	Series	A	B	e	E	L	M	S1	S2
RAD	**00**	8	10.2	M7x0.5	5.5	22.0	1.0	6.3	9
RAD	**0S**	10	12.4	M9x0.6	7.0	25.0	1.2	8.2	11
RAD	**1S**	14	15.8	M12x1.0	7.5	28.5	1.5	10.5	14
RAD	**2S**	18	19.2	M15x1.0	8.5	31.5	1.8	13.5	17
RAD	**3S**	22	25.0	M18x1.0	11.5	38.5	2.0	16.5	22
RAD	**4S**	28	34.0	M25x1.0	12.0	46.5	2.5	–	30
RAD	**5S**	40	40.0	M35x1.0	15.5	60.5	3.0	–	–

P1 Panel cut-out (page 158)

P2 Panel cut-out 4S and 5S series (page 158)

Note: the 5S series is delivered with a tapered washer and a round nut.

Note: See page 114 for the available plug and contact configurations and in order to ensure correct contact alignment.

New design models

FGZ Straight plug, cable collet

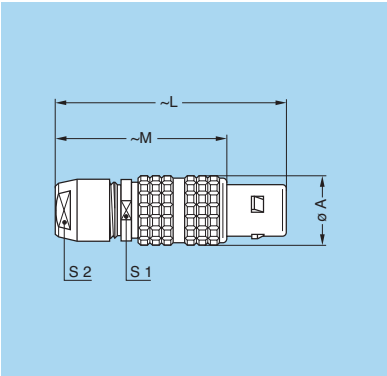

Reference		Dimensions (mm)				
Model	Series	A	L	M	S1	S2
FGZ	**0S**	9.5	36	26	8	7
FGZ	**1S**	12.0	43	32	10	9
FGZ	**2S**	15.0	50	38	13	12

M1 Cable assembly (page 169)

Note: D type collets of the B series are used in this model (see page 67).

FGZ Straight plug, cable collet and nut for fitting a bend relief [1)]

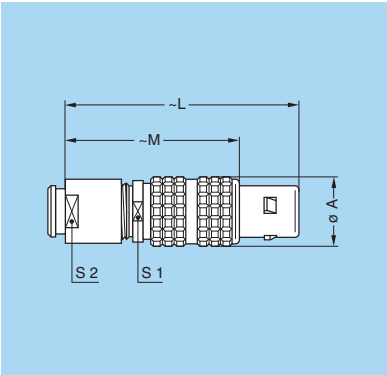

Reference		Dimensions (mm)				
Model	Series	A	L	M	S1	S2
FGZ	**0S**	9.5	35	25	8	7
FGZ	**1S**	12.0	42	31	10	9
FGZ	**2S**	15.0	49	37	13	12

M1 Cable assembly (page 169)

Note: D type collets of the B series are used in this model (see page 67).

Note: [1)] to order, add a «Z» at the end of the reference.
The bend relief must be ordered separately (see page 145).

PGZ Free socket, cable collet

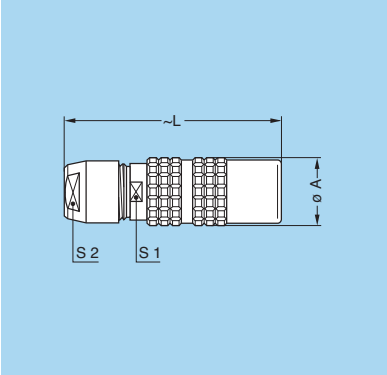

Reference		Dim. (mm)			
Model	Series	A	L	S1	S2
PGZ	**0S**	9.5	35.5	8	7
PGZ	**1S**	12.5	40.5	10	9
PGZ	**2S**	15.0	49.0	13	12

M1 Cable assembly (page 169)

Note: D type collets of the B series are used in this model (see page 67).

PGZ Free socket, cable collet and nut for fitting a bend relief [1)]

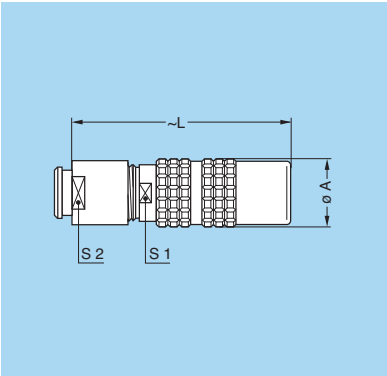

Reference		Dim. (mm)			
Model	Series	A	L	S1	S2
PGZ	**0S**	9.5	34.5	8	7
PGZ	**1S**	12.5	39.5	10	9
PGZ	**2S**	15.0	48.0	13	12

M1 Cable assembly (page 169)

Note: D type collets of the B series are used in this model (see page 67).

Note: [1)] to order, add a «Z» at the end of the reference.
The bend relief must be ordered separately (see page 145).

Elbow socket models

Technical Characteristics

Types

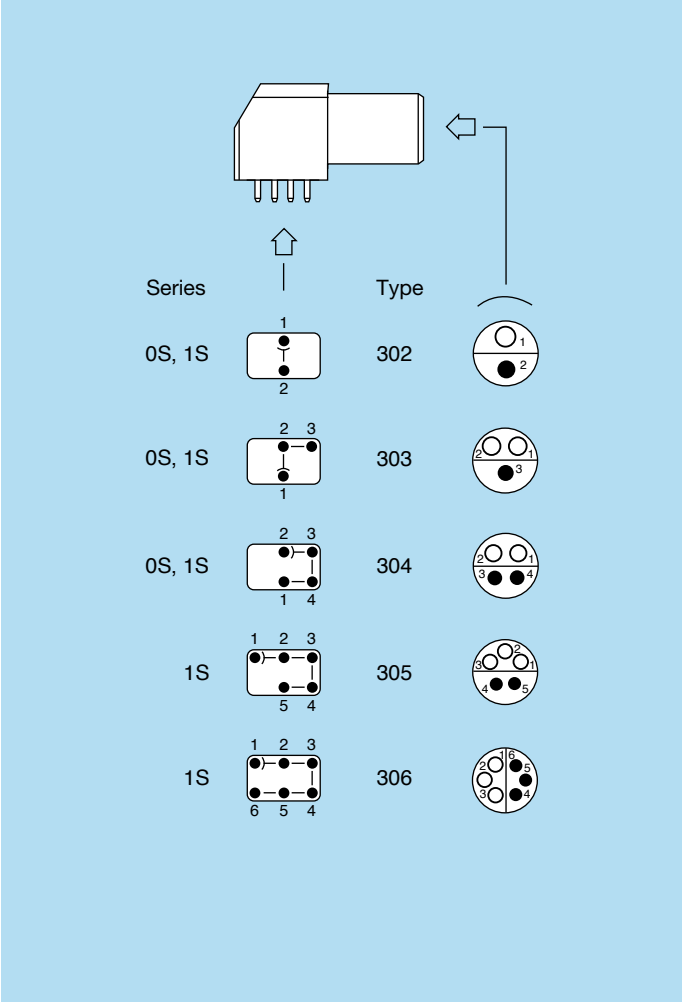

Materials and Treatment

Component	Material	Surface Treat. (µm)		
		Cu	Ni	Au
Housing	PPS [1]	–		
	Brass	0.5	3	–
Metallic parts	Brass	0.5	3	–
Earthing crown	Bronze	0.5	3	–
Insulator	PEEK	–		
Female contact	Bronze	0.5	3	1.5

Note: [1] not used for all sizes.
The surface treatment standards are as follows:
– Nickel SAE AMS QQ N 290
– Gold: ISO 27874

Electrical

Model	Series	Types	Test voltage (kV rms)[1]	Rated current (A)
EPL	**0S**	302-303-304	1.20	4.5
EXP	**0S**			
EPL	**1S**	302-303-304	1.20	4.5
EXP	**1S**			
EPL	**1S**	305-306	0.70	4.5
EXP	**1S**			

Note: [1] see calculation method, caution and suggested standard on page 190.

EPL Elbow (90°) socket for printed circuit (solder or screw fixing)

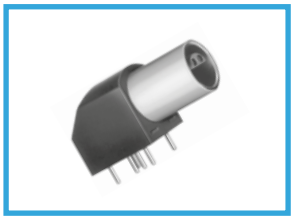

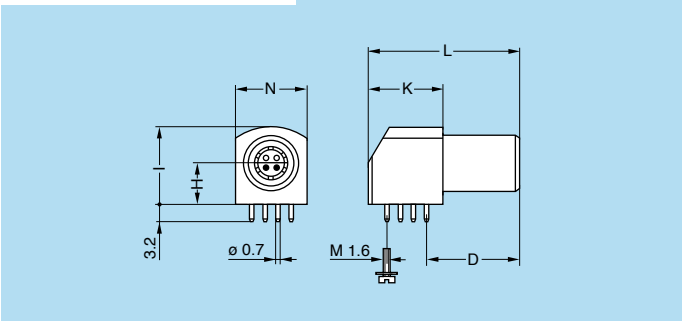

Part number	Dimensions (mm)						
	A	D	H	I	K	L	N
EPL.0S.302.HLN	9	14.6	6.7	12.6	13.3	25	11.7
EPL.0S.303.HLN							
EPL.0S.304.HLN							
EPL.1S.302.HLN	11	16.6	7.5	14.0	13.3	27	12.6
EPL.1S.303.HLN							
EPL.1S.304.HLN							
EPL.1S.305.HLN							
EPL.1S.306.HLN							

Note: to replace the 4 ground pins by 4 screws (M1.6) add an «S» to the end of the part number. (e.g.: EPL.1S.303.HLNS)

P22 PCB drilling pattern (page 168)

EPL Elbow (90°) socket for printed circuit

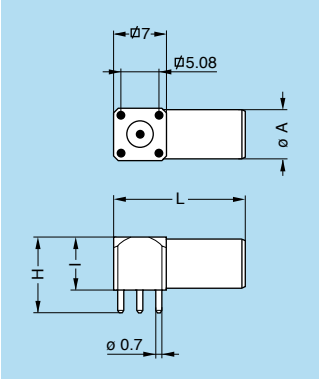

Part number	Dimensions (mm)		
	A	H	I
EPL.00.113.NLN	6.8	10	7

P23 PCB drilling pattern (page 168)

EPL Elbow (90°) socket for printed circuit

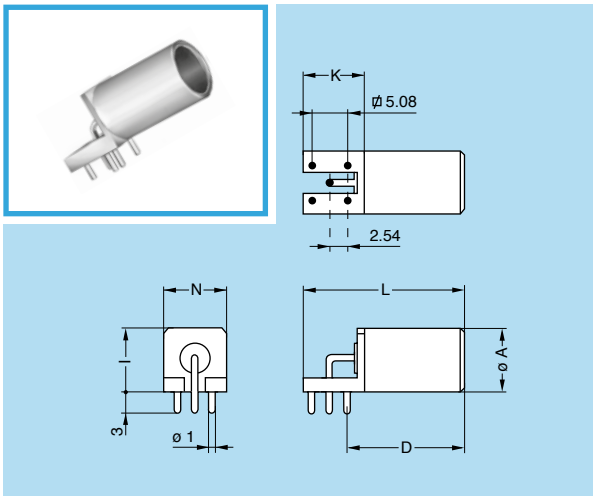

Part number	Dimensions (mm)						
	A	D	H	I	K	L	N
EPL.0S.116.DTL	8.8	16	12	9	7.7	22.7	9

Note: available only in unipole version.

P23 PCB drilling pattern (page 168)

EXP Elbow (90°) socket for printed circuit with two nuts (solder or screw fixing)

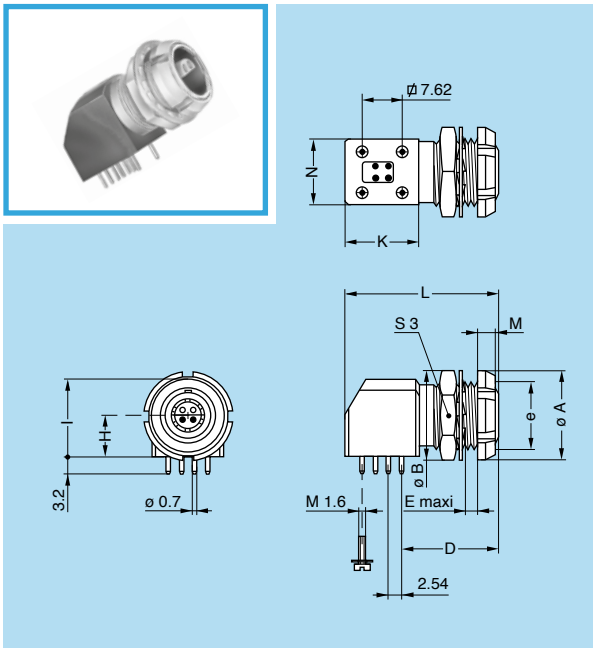

Part number	Dimensions (mm)											
	A	B	D	e	E	H	I	K	L	M	N	S3
EXP.0S.302.HLN												
EXP.0S.303.HLN	12	12.4	14.6	M9x0.6	6.0	6.7	12.6	13.3	25	2.5	11.7	11
EXP.0S.304.HLN												
EXP.1S.302.HLN												
EXP.1S.303.HLN												
EXP.1S.304.HLN	14	15.0	16.6	M11x0.5	7.5	7.5	14.0	13.3	27	3.5	12.6	13
EXP.1S.305.HLN												
EXP.1S.306.HLN												

Note: to replace the 4 ground pins by 4 screws (M1.6) add an «S» to the end of the part number. (e.g.: EXP.1S.303.HLNS).

P2 Panel cut-out 0S series (page 158)

P10 Panel cut-out 1S series (page 158)

P22 PCB drilling pattern (page 168)

Plastic housing models

These connectors are particularly recommended for all applications requiring maximum electrical insulation when mated. The design, including a latch sleeve and a metal earthing crown, guarantees EMC screening efficiency to meet most requirements.

Technical Characteristics

Mechanical and Climatical

Characteristics	Value				Standard
	PEEK	POM	PSU	PPSU	
Colour	natural (beige)	black	white or grey	cream	–
Endurance[1)]	> 5000 cycles	> 5000 cycles	> 5000 cycles	> 5000 cycles	IEC 60512-5 test 9a
Humidity	up to 95% at 60° C				–
Temperature range	- 50° C/+ 250° C	- 50° C/+ 115° C	- 50° C/+ 150° C	- 50° C/+ 180° C	–
Sterilization resistance[2)]	> 200 cycles	none	~20 cycles	> 100 cycles	IEC 60601-1 § 44.7
Resistance to organic solvents	very good	very good	limited	good	–

Note: [1)] see page 189, contact resistance after mating cycles. See page 185, mechanical endurance latching force. [2)] Steam sterilization

FFA Straight plug, cable collet, PEEK or POM outer shell
FFP Straight plug, cable collet, PEEK or POM outer shell and inner anti-rotating device

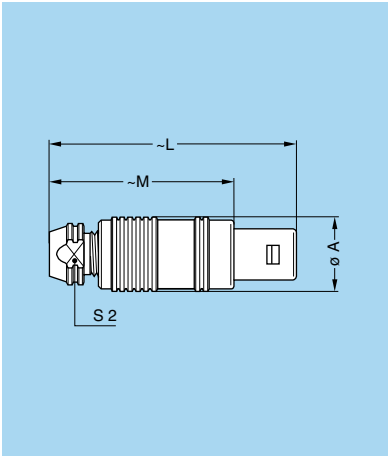

Reference		Dimensions (mm)			
Model	Series	A	L	M	S2
FFA	**00**	7	33.5	25.5	6
FFP	**1S**	12	42.5	31.5	10
FFP	**2S**	15	52.0	40.0	12
FFP	**3S**	18	61.0	46.0	14

M1 Cable assembly (pages 175 and 176)

FFP Straight plug, cable collet, PEEK or POM outer shell, inner anti-rotating device and nut for fitting a bend relief [1)]

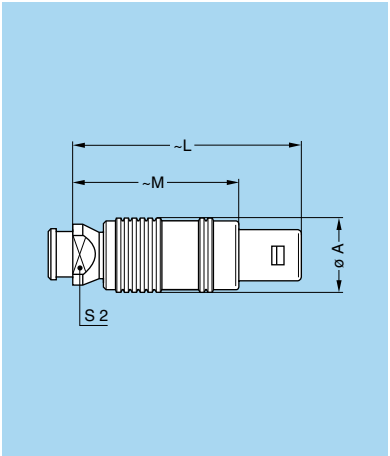

Reference		Dimensions (mm)			
Model	Series	A	L	M	S2
FFP	**1S**	12	41.5	30.5	10
FFP	**2S**	15	51.0	39.0	12
FFP	**3S**	18	61.0	46.0	14

M1 Cable assembly (pages 175 and 176)

Note: [1)] to order, add a «Z» at the end of the reference.
The bend relief must be ordered separately (see page 145).

FFL Straight plug, cable collet, with PSU and PPSU outer shell, inner anti-rotating device and nut for fitting a bend relief [1)]

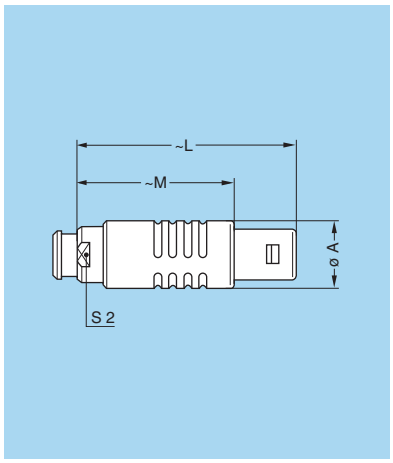

Reference		Dimensions (mm)			
Model	Series	A	L	M	S2
FFL	**2S**	16.5	51.5	39.5	13

M4 Cable assembly (page 177)

Note: [1)] to order, add a «Z» at the end of the reference.
The bend relief must be ordered separately (see page 145).

Note: This model is fitted with a «D or M» type collet system. It is also adapted for crimp contacts. Available only for multipole.

ERN Fixed socket, nut fixing, with earthing tag, PEEK or POM outer shell

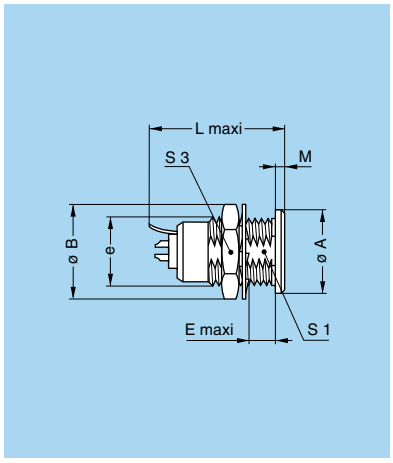

Reference		Dimensions (mm)								
Model	Series	A	B	e	E	L	L[1)]	M	S1	S3
ERN	**00**	9	10.2	M7x0.5	5.5	–	14.5	1.0	6.3	9
ERN	**0S**	11	12.4	M9x0.6	6.4	19.3	19.3	1.8	8.2	11
ERN	**1S**	14	15.8	M12x1.0	7.5	22.4	22.4	1.5	10.5	14
ERN	**2S**	18	19.2	M15x1.0	8.5	26.3	26.3	2.0	13.5	17
ERN	**3S**	22	25.0	M18x1.0	11.5	29.8	29.8	2.0	16.5	22

P1 Panel cut-out (page 158)

Note: [1)] unipole model

Watertight or vacuumtight models

These socket or coupler models allow the device on which they are fitted to reach a protection index of IP68 as per IEC 60529. They are fully compatible with plugs of the same series and are widely used for portable radios, military, laboratory equipment, aviation, etc.
These models are identified by a letter «P» at the end of the reference.
Most of these models are also available in a vacuumtight version. Such models are identified by an additional letter «V» at the end of the part number (certificate on request).
Epoxy resin is used to seal these models.

Technical Characteristics

Mechanical and Climatical

Characteristics		Value	Standard
Endurance[1)]		> 5000 cycles	IEC 60512-5 test 9a
Humidity		up to 95% at 60° C	
Temperature range	0S-1S	- 20° C/ + 100° C	
	2S-6S	- 20° C/+ 80° C	
Salt spray corrosion test[4)]		> 1000h	IEC 60512-6 test 11f
Climatical category		20/80/21	IEC 60068-1
Leakage rate (He)[2)]		< 10^{-7} mbar.l.s^{-1}	IEC 60512-7 test 14b

Characteristics		Value	Standard
Maximum operating pressure[3)]	0S	60 bar	IEC 60512-7 test 14d
	1S	60 bar	IEC 60512-7 test 14d
	2S	40 bar	IEC 60512-7 test 14d
	3S	30 bar	IEC 60512-7 test 14d
	4S	15 bar	IEC 60512-7 test 14d
	5S	5 bar	IEC 60512-7 test 14d
	6S	5 bar	IEC 60512-7 test 14d

Note: 1) see page 189, contact resistance after mating cycles. See page 185, mechanical endurance latching force.
2) only for vacuumtight models. Residual traces of grease used during (He) leak testing are on the o-ring. Please contact us for further details.
3) this value corresponds to the maximum allowed pressure difference for the assembled socket. 4) for chrome plated product (« C » material code).

HGP Fixed socket, nut fixing, watertight or vacuumtight

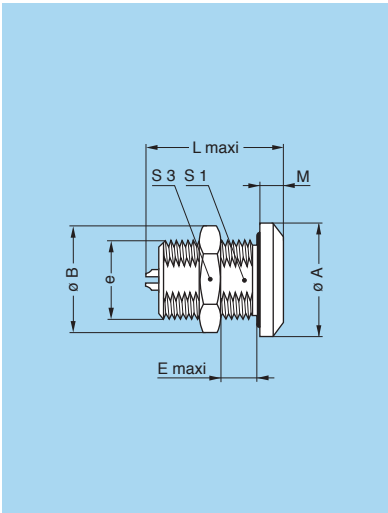

Reference		Dimensions (mm)								
Model	Series	A	B	e	E	L	L[1)]	M	S1	S3
HGP	**0S**	18	15.8	M12x1.0	11.5	20.5	21.5	4.0	10.5	14
HGP	**1S**	20	19.2	M14x1.0	15.5	25.0	22.0	4.0	12.5	17
HGP	**2S**	20	21.5	M16x1.0	17.0	29.5	28.0	4.0	14.5	19
HGP	**3S**	28	27.0	M20x1.0	18.0	33.0	34.0	6.0	18.5	24
HGP	**4S**	34	34.0	M25x1.0	22.5	39.0	43.0	6.5	23.5	30
HGP	**5S**	45	40.0	M35x1.0	28.0	50.5	78.5	7.5	33.5	–
HGP	**6S**	58	54.0	M48x1.5	22.0	51.0	–	6.0	45.5	–

P3 Panel cut-out (page 158)

Note: 1) unipole model.

Note: The 5S and 6S series are delivered with a round nut.

HGW Fixed socket, nut fixing, with back washer, watertight or vacuumtight

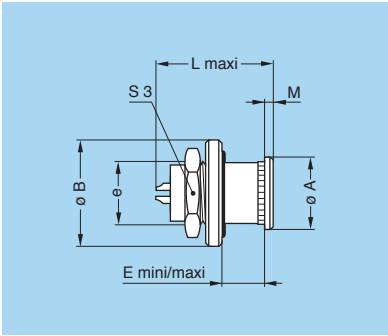

Reference		Dimensions (mm)							
Model	Series	A	B	e	E mini	E maxi	L	M	S3
HGW	**0S**	10	15	M9x0.6	2	3	20.5	1.2	11
HGW	**1S**	14	18	M12x1.0	2	4	25.0	1.5	14

P11 Panel cut-out (page 158)

Note: vacuumtight version is only available in the 0S series.

EWB Fixed socket, nut fixing, with two flats on the flange, watertight or vacuumtight

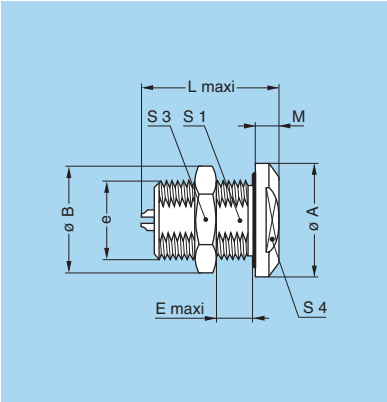

Reference		Dimensions (mm)									
Model	Series	A	B	e	E	L	L[1)]	M	S1	S3	S4
EWB	**0S**	18	15.8	M12x1.0	11.0	20.5	–	4.0	10.5	14	14
EWB	**1S**	20	19.2	M14x1.0	15.5	25.5	25.5	4.0	12.5	17	16
EWB	**2S**	20	21.5	M16x1.0	17.0	28.0	26.5	4.0	14.5	19	16
EWB	**4S**	34	34.0	M25x1.0	22.5	43.0	–	6.5	23.5	30	27

P3 Panel cut-out (page 158)

Note: 1) unipole model

HCP Fixed socket, nut fixing, watertight or vacuumtight (back panel mounting)

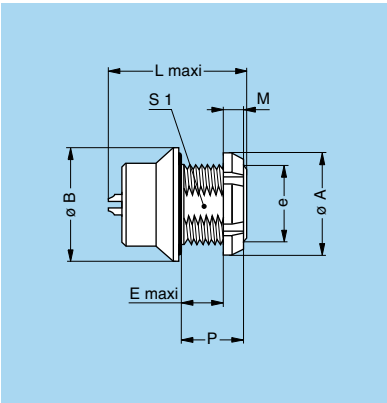

Reference		Dimensions (mm)							
Model	Series	A	B	e	E	L	M	P	S1
HCP	**1S**	18	20	M14x1.0	8.6	25.5	3.5	12.0	–
HCP	**2S**	20	20	M16x1.0	12.5	29.0	3.5	16.5	14.5
HCP	**4S**	27	34	M25x1.0	15.5	41.0	4.5	20.0	23.5

P3 Panel cut-out (page 158)

Note: the 2S and 4S series are delivered with a conical nut.

SWH Fixed coupler, nut fixing, watertight or vacuumtight

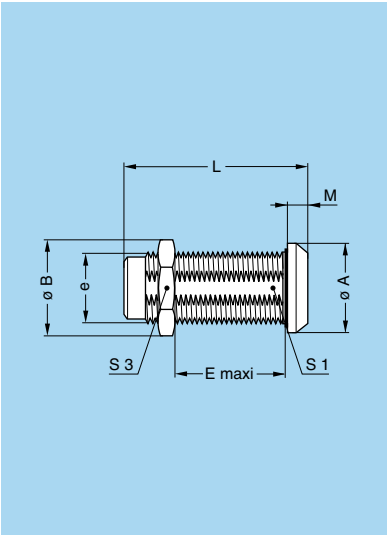

Reference		Dimensions (mm)							
Model	Series	A	B	e	E	L	M	S1	S3
SWH	**0S**	14	13.8	M10x0.75	17	34	2.0	9.0	12
SWH	**1S**	17	15.8	M12x1.00	28	39	2.5	10.5	14
SWH	**2S**	20	21.5	M16x1.00	25	44	4.0	15.0	19
SWH	**3S**	25	27.0	M20x1.00	30	53	4.0	18.5	24
SWH	**4S**	34	34.0	M25x1.00	50	65	4.0	23.5	30
SWH	**5S**	45	40.0	M35x1.00	58	80	5.0	33.5	–
SWH	**6S**	58	54.0	M48x1.50	55	81	6.0	45.5	–

P4 Panel cut-out (page 158)

Note: The 5S and 6S series are delivered with a round nut.

Note: see page 114 for the available plug and contact configurations and in order to ensure correct contact alignment.

E Series

E series connectors have been specifically designed for outdoor applications.
They include an inner sleeve and two seals to prevent penetration of solids or liquids into the housing formed by the plug, free socket, fixed socket or coupler. All models of these series are watertight when mated and give a protection index of IP 68 as per IEC 60529 standard (in mated condition) when correctly assembled to an appropriate cable (IP 66 otherwise).

- security of the Push-Pull latching system
- unipole types transmitting current up to 230 A and multipole types with up to 106 contacts
- wide range of models satisfying most applications
- 360° screening for full EMC shielding
- watertight connection (IP 68/IP 66)
- polarization by stepped insert (half-moon) fitted with male and female contacts
- solder or print contacts (straight or elbow)
- rugged housing for extreme working condition.

Metal housing models (page 95)

Straight plug

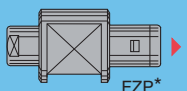
FZP*

Fixed plug

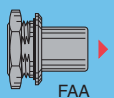
FAA

Elbow plug

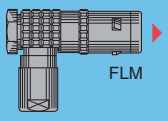
FLM

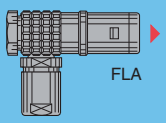
FLA

Straight plugs

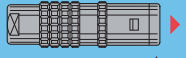
FFA, FFP*

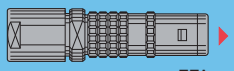
FFA

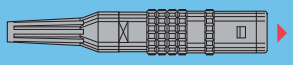
FFA

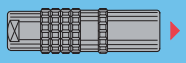
FFF

Fixed sockets

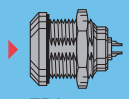
ERA

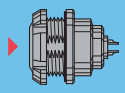
EEP

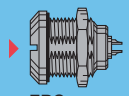
ERC

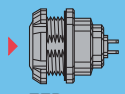
EEP

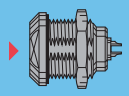
ERB*

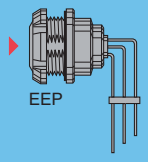
EEP

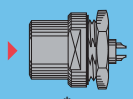
EHP*

Free sockets

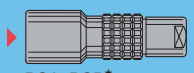
PCA, PCP*

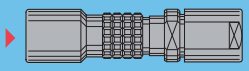
PCA

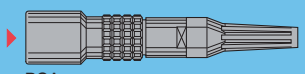
PCA

Fixed socket

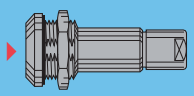
PSA

Free coupler

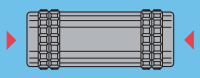
RMA

Note: * Contact LEMO for details.

Watertight or vacuumtight models (page 101)

Fixed sockets

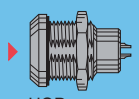
HGP

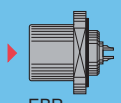
EBR

Fixed coupler

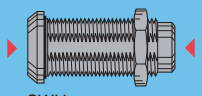
SWH

Part Numbering System

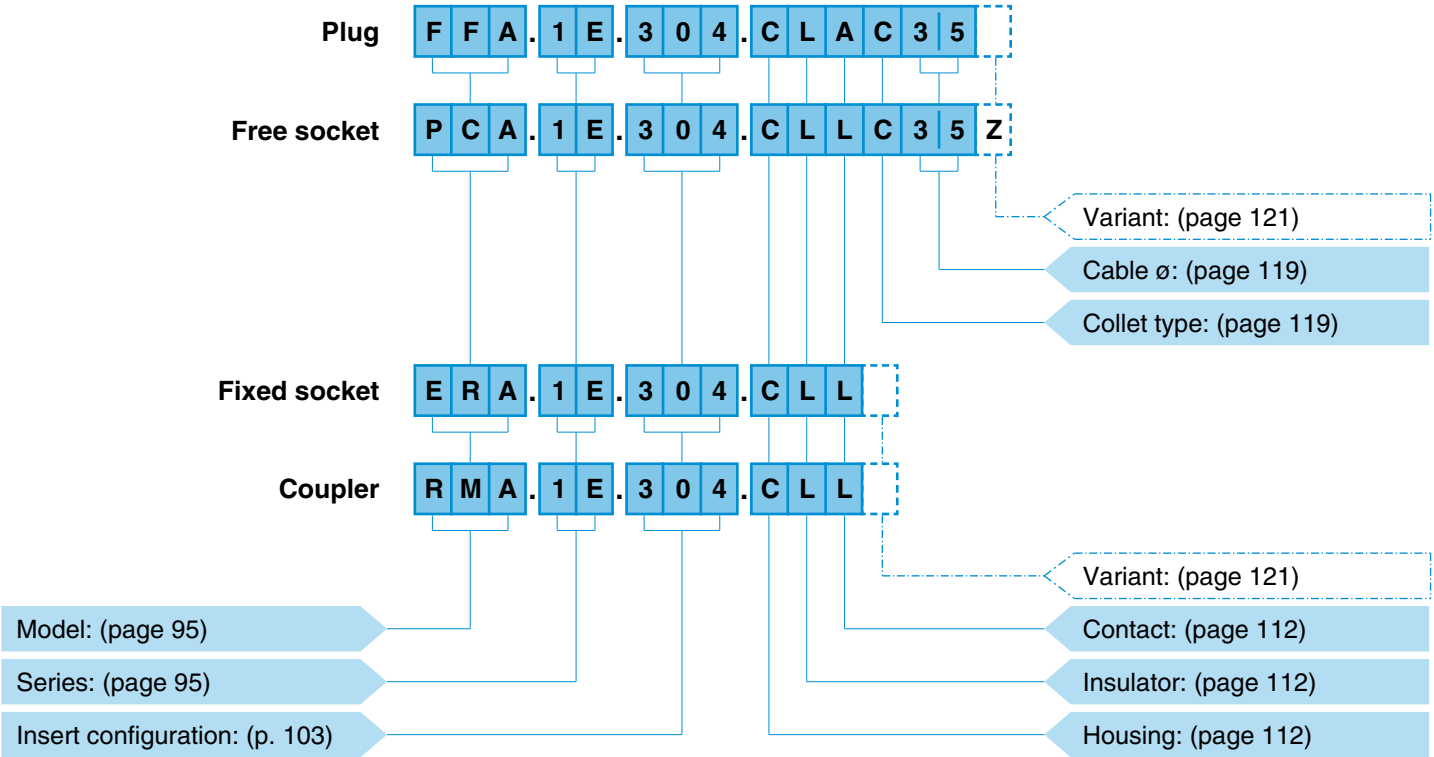

FFA.1E.304.CLAC35 = straight plug with cable collet, 1E series, multipole type with 4 contacts, outer shell in chrome-plated brass, PEEK insulator, 2 male and 2 female solder contacts, C type collet for a 3.5 mm diameter cable.

PCA.1E.304.CLLC35Z = free socket with cable collet, 1E series, multipole type with 4 contacts, outer shell in chrome-plated brass, PEEK insulator, 2 female and 2 male solder contacts, C type collet for a 3.5 mm diameter cable and collet nut for fitting a bend relief.

ERA.1E.304.CLL = fixed socket, nut fixing, 1E series, multipole type with 4 contacts, outer shell in chrome-plated brass, PEEK insulator, 2 female and 2 male solder contacts.

RMA.1E.304.CLL = straight coupler, 1E series, multipole type with 4 contacts, outer shell in chrome-plated brass, PEEK insulator, 2 female and 2 male contacts each end.

Part Section Showing Internal Components

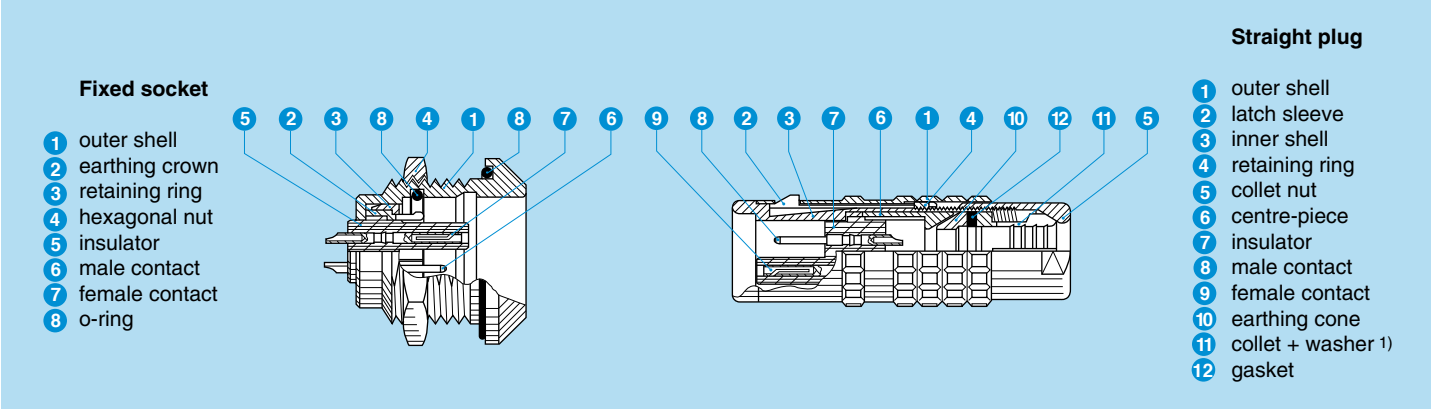

Note: 1) depending on models.

Metal housing models

Technical Characteristics

Mechanical and Climatical

Characteristics	Value	Standard
Endurance[1]	> 5000 cycles	IEC 60512-5 test 9a
Humidity	up to 95% at 60° C	
Temperature range[2]	- 55° C, + 200° C	
Resistance to vibrations	10-2000 Hz, 15g	IEC 60512-4 test 6d
Shock resistance	100 g, 6 ms	IEC 60512-4 test 6c
Salt spray corrosion test[4]	> 1000h	IEC 60512-6 test 11f
Protection index (mated)[3]	IP 68/IP 66	IEC 60529
Climatical category	50/175/21	IEC 60068-1

Electrical

Characteristics		Value	Standard
Shielding efficiency	at 10 MHz	> 95 dB	IEC 60169-1-3
	at 1 GHz	> 80 dB	IEC 60169-1-3

Note: the various tests have been carried out with FFA and ERA connector pairs, with chrome-plated brass shell, PEEK insulator and silicone O-ring. Detailed electrical characteristics, as well as materials and treatment are presented in the chapter Technical Characteristics on page 182.

1) see page 189, contact resistance after mating cycles. See page 185, mechanical endurance latching force.
2) minimum operating temperature is -20°C for sockets fitted with an FPM (Viton®) O-ring.
3) IP68 achieved providing that the cable is perfectly circular and that assembly process ensures a high integrity seal.
4) for chrome plated product (« C » material code).

FFA Straight plug, cable collet

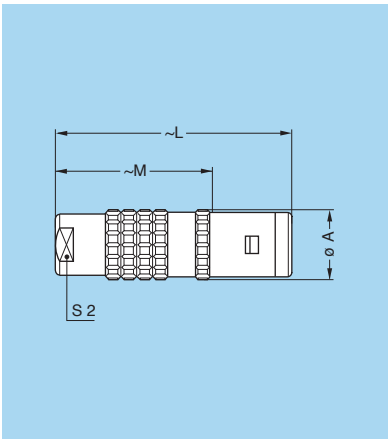

Reference		Dimensions (mm)			
Model	Series	A	L	M	S2
FFA	**0E**	11	34	23.0	8
FFA	**1E**	13	42	28.0	9
FFA	**2E**	16	52	36.0	12
FFA	**3E**	19	61	41.0	15
FFA	**4E**	25	71	50.5	19
FFA	**5E**	38	92	67.0	32
FGG[1]	**6E**	47	118	89.0	38

Note: 1) with key (G)

M1 Cable assembly (pages 179 to 181)

FFA Straight plug with oversize cable collet [1]

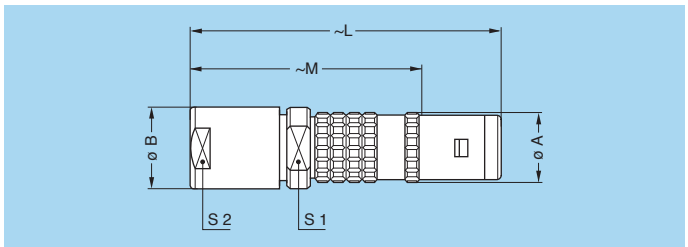

Reference		Dimensions (mm)					
Model	Series	A	B	L	M	S1	S2
FFA	**1E**	13	14.5	55	41	12	12
FFA	**2E**	16	17.0	65	49	15	15
FFA	**3E**	19	22.0	80	60	19	19
FFA	**4E**	25	36.0	118	84	30	32

M2 Cable assembly (pages 179 and 181)

Note: 1) correspond to K type of collet, the fitting of oversize collets onto this model allows them to be fitted to the cables that can be accommodated by the next housing size up (see page 119).

FFA Straight plug, cable collet and nut for fitting a bend relief [1)]

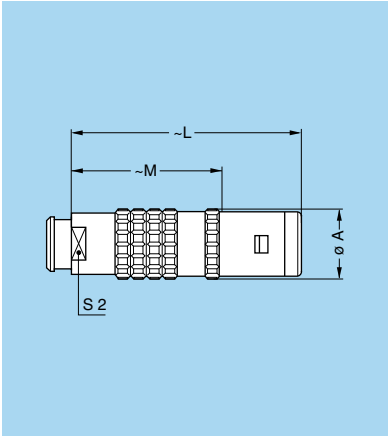

Reference		Dimensions (mm)			
Model	Series	A	L	M	S2
FFA	**0E**	11	34	23.0	7
FFA	**1E**	13	42	28.0	9
FFA	**2E**	16	52	36.0	12
FFA	**3E**	19	60	40.0	15
FFA	**4E**	25	71	50.5	19

M1 Cable assembly (pages 179 and 180)

Note: [1)] to order, add a «Z» at the end of the reference.
The bend relief must be ordered separately (see page 145).

FFF Straight plug non-latching cable collet

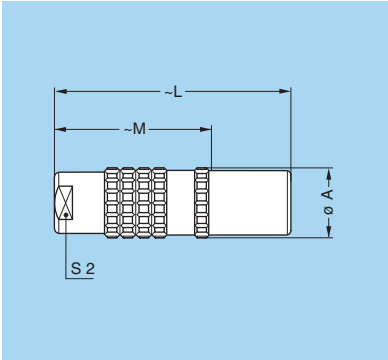

Reference		Dimensions (mm)			
Model	Series	A	L	M	S2
FFF	**0E**	11	34	23	8
FFF	**1E**	13	42	28	9

M1 Cable assembly (pages 179 and 180)

FAA Fixed plug non-latching, nut fixing

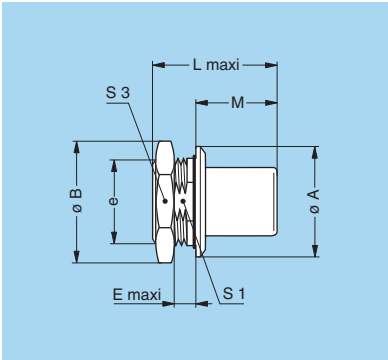

Reference		Dimensions (mm)								
Model	Series	A	B	e	E	L	L[1)]	M	S1	S3
FAA	**0E**	18	19.2	M14x1.0	3.5	19.5	19.5	13.0	12.5	17
FAA	**1E**	20	21.5	M16x1.0	3.5	23.0	23.0	16.0	14.5	19
FAA	**2E**	25	27.0	M20x1.0	4.0	27.0	27.0	18.0	18.5	24
FAA	**3E**	31	34.0	M24x1.0	4.5	32.5	32.5	22.5	22.5	30

P1 Panel cut-out (page 159)

Note: [1)] unipole model

FLM Elbow (90°) plug, cable collet

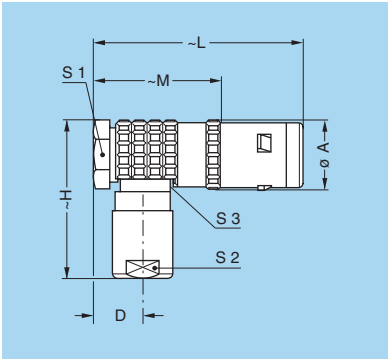

Reference		Dimensions (mm)							
Model	Series	A	D	H	L	M	S1	S2	S3
FLM	**0E**	11	7.3	25	36	25	9	8	8
FLM	**1E**	13	8.7	33	42	28	11	9	10
FLM	**2E**	16	10.2	40	51	35	14	12	13

M3 Cable assembly (pages 179 and 180)

FLA Elbow (90°) plug, cable collet

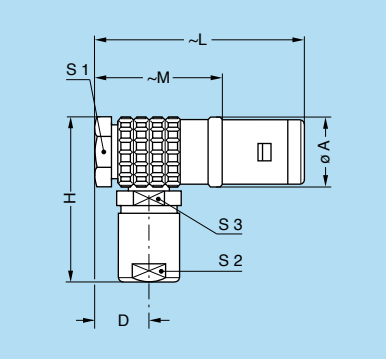

Reference		Dimensions (mm)							
Model	Series	A	D	H	L	M	S1	S2	S3
FLA	**3E**	21.0	11.5	47	60	40.0	18	15	16
FLA	**4E**	27.5	15.5	57	72	51.5	24	19	22

M3 Cable assembly (pages 179 and 180)

ERA Fixed socket, nut fixing

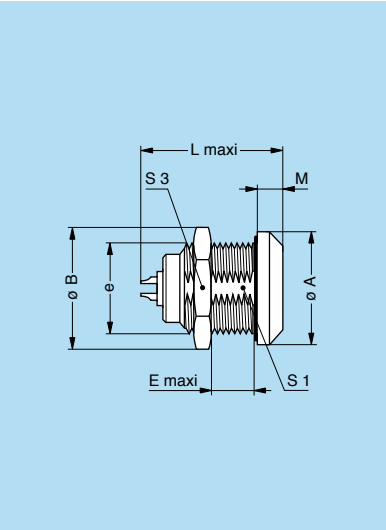

Reference		Dimensions (mm)								
Model	Series	A	B	e	E	L	L[1]	M	S1	S3
ERA	**0E**	18	19.2	M14x1.0	5.5	19.5	20.5	4.0	12.5	17
ERA	**1E**	20	21.5	M16x1.0	9.0	24.0	25.3	4.5	14.5	19
ERA	**2E**	25	27.0	M20x1.0	9.0	28.5	30.0	5.0	18.5	24
ERA	**3E**	31	34.0	M24x1.0	11.0	34.0	35.0	6.0	22.5	30
ERA	**4E**	37	40.5	M30x1.0	9.0	36.0	38.0	6.5	28.5	36
ERA	**5E**	55	54.0	M45x1.5	10.0	44.5	78.0	9.0	42.5	–
EGG[2]	**6E**	65	65.0	M55x2.0	10.5	48.5	–	10.0	52.0	–

P1 Panel cut-out (page 159)

Note: [1] unipole model.
[2] with key (G).

Note: The 5E and 6E series are delivered with a round nut.

ERC Fixed socket, nut fixing with slot in the flange

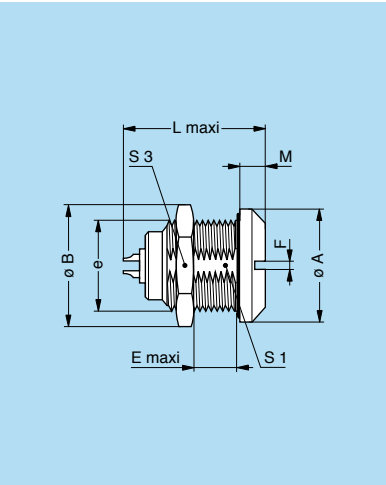

Reference		Dimensions (mm)									
Model	Series	A	B	e	E	F	L	L[1]	M	S1	S3
ERC	**0E**	18	19.2	M14x1.0	5.5	1.5	19.5	20.5	4.0	12.5	17
ERC	**3E**	31	34.0	M24x1.0	11.0	3.0	34.0	35.0	6.0	22.5	30
ERC	**4E**	37	40.5	M30x1.0	9.0	3.0	36.0	38.0	6.5	28.5	36

P1 Panel cut-out (page 159)

Note: [1] unipole model.

EEP Fixed socket, nut fixing (back panel mounting)

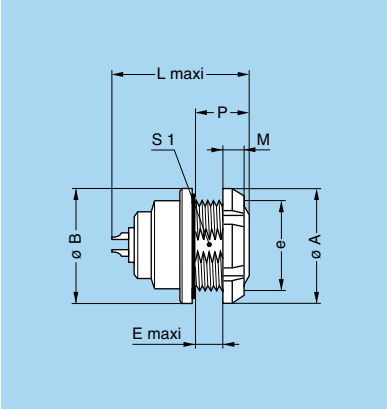

Reference		Dimensions (mm)								
Model	Series	A	B	e	E	L	L[1)]	M	P	S1
EEP	0E	18	18	M14x1.0	3.5	19.5	20.5	3.5	7	12.5
EEP	1E	20	20	M16x1.0	6.5	24.0	25.3	3.5	10	14.5
EEP	2E	25	25	M20x1.0	6.5	28.5	30.0	3.5	10	18.5
EEP	3E	30	31	M24x1.0	7.5	34.0	35.0	4.5	12	22.5

P1 Panel cut-out (page 159)

Note: [1)] unipole model

Note: the 3E series is delivered with a conical nut.

EEP Fixed socket, nut fixing, with straight contact for printed circuit (back panel mounting)

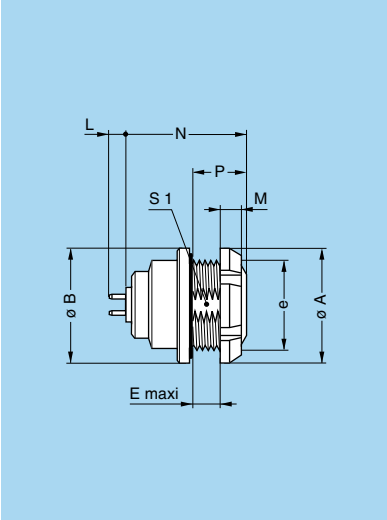

Reference		Dimensions (mm)							
Model	Series	A	B	e	E	M	N	P	S1
EEP	0E	18	18	M14x1.0	3.5	3.5	16.0	7	12.5
EEP	1E	20	20	M16x1.0	6.5	3.5	21.5	10	14.5
EEP	2E	25	25	M20x1.0	6.5	3.5	24.0	10	18.5
EEP	3E	30	31	M24x1.0	7.5	4.5	29.5	12	22.5

P1 Panel cut-out (page 159)

P21 PCB drilling pattern (page 166)

Note: The 3E series is delivered with a conical nut.

Note: this contact type is available for all E●● socket models.
See page 167 for table of available types.
Length «L» depends on the number of contacts, see PCB drilling pattern on page 167.

EEP Fixed socket, nut fixing, with elbow (90°) contacts for printed circuit (back panel mounting)

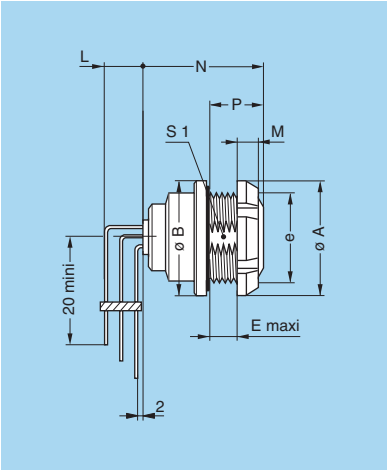

Reference		Dimensions (mm)							
Model	Series	A	B	e	E	M	N	P	S1
EEP	1E	20	20	M16x1.0	6.5	3.5	21.5	10	14.5
EEP	2E	25	25	M20x1.0	6.5	3.5	24.0	10	18.5

P1 Panel cut-out (page 159)

P24 PCB drilling pattern (page 168)

Note: this contact type is available for all back panel mounting socket types. See page 168 for available types.
Length «L» depends on the number of contacts, see PCB drilling pattern on page 168.

PCA Free socket, cable collet

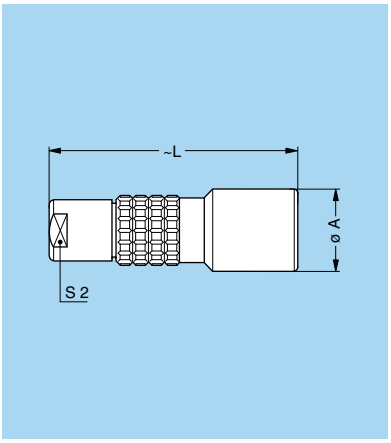

Reference		Dimensions (mm)		
Model	Series	A	L	S2
PCA	**0E**	13	34.0	8
PCA	**1E**	15	45.0	9
PCA	**2E**	19	54.0	12
PCA	**3E**	23	65.0	15
PCA	**4E**	29	75.5	19
PCA	**5E**	42	95.0	32
PHG[1)]	**6E**	52	125.0	38

Note: [1)] with key (G)

M1 Cable assembly (pages 179 to 181)

PCA Free socket with oversize cable collet [1)]

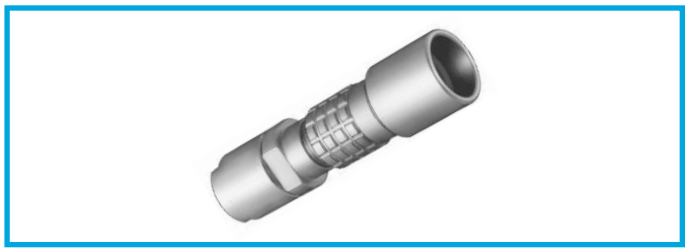

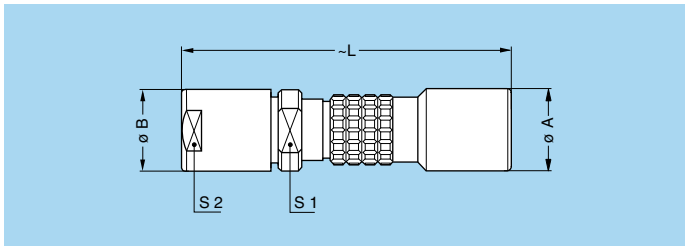

Reference		Dimensions (mm)				
Model	Series	A	B	L	S1	S2
PCA	**1E**	15	14.5	58.0	12	12
PCA	**2E**	19	17.0	67.0	15	15
PCA	**3E**	23	22.0	84.0	19	19
PCA	**4E**	29	36.0	109.0	30	32

M2 Cable assembly (page 181)

Note: [1)] correspond to K type of collet, the fitting of oversize collets onto this model allows them to be fitted to the cables that can be accommodated by the next housing size up (see page 119).

PCA Free socket, cable collet and nut for fitting a bend relief [1)]

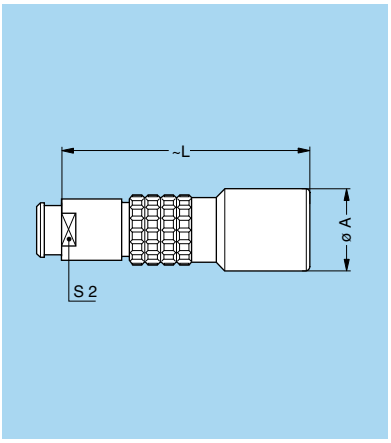

Reference		Dimensions (mm)		
Model	Series	A	L	S2
PCA	**0E**	13	34.0	7
PCA	**1E**	15	45.0	9
PCA	**2E**	19	54.0	12
PCA	**3E**	23	64.0	15
PCA	**4E**	29	75.5	19

M1 Cable assembly (pages 179 and 180)

Note: [1)] to order, add a «Z» at the end of the reference.
The bend relief must be ordered separately (see page 145).

PSA Fixed socket, nut fixing, cable collet

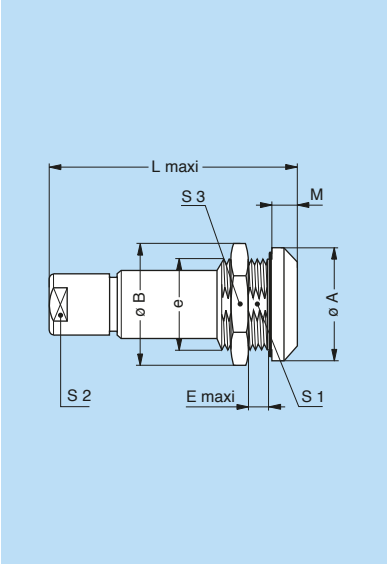

Reference		Dimensions (mm)								
Model	Series	A	B	e	E	L	M	S1	S2	S3
PSA	**0E**	18	19.2	M14x1.0	5.5	34.0	4.0	12.5	8	17
PSA	**1E**	20	21.5	M16x1.0	9.0	45.0	4.5	14.5	9	19
PSA	**2E**	25	27.0	M20x1.0	9.0	54.0	5.0	18.5	12	24
PSA	**3E**	31	34.0	M24x1.0	11.0	65.0	6.0	22.5	15	30
PSA	**4E**	37	40.5	M30x1.0	9.0	75.5	6.5	28.5	19	36
PSA	**5E**	51	54.0	M45x1.5	10.0	95.0	9.0	42.5	32	54
PKG[1)]	**6E**	65	65.0	M55x2.0	10.5	125.0	10.0	–	38	–

P1 Panel cut-out (page 159)

M1 Cable assembly (pages 179 to 181)

Note: The 5E and 6E series are delivered with a round nut.

Note: [1)] with key (G).

RMA Free coupler

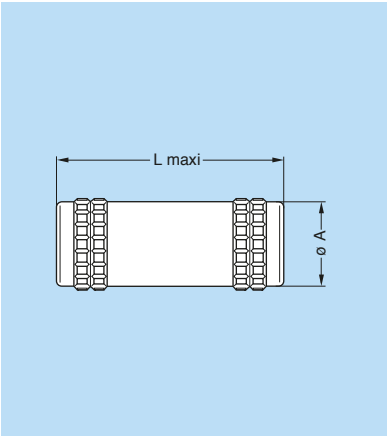

Reference		Dim. (mm)	
Model	Series	A	L
RMA	**0E**	14	30
RMA	**1E**	16	40
RMA	**2E**	20	44
RMA	**3E**	25	54
RMA	**4E**	30	57
RMA	**5E**	44	67

Note: see page 114 for the available plug and contact configurations and in order to ensure correct contact alignment.

Watertight or vacuumtight models

These socket or coupler models allow the device on which they are fitted to reach a protection index of IP 68 as per IEC 60529. They are fully compatible with plugs of the same series and are widely used for portable radios, military, laboratory equipment, aviation, etc.
These models are identified by a letter «P» at the end of the reference.
Most of these models are also available in a vacuumtight version. Such models are identified by an additional letter «V» at the end of the part number (certificate on request).
Epoxy resin is used to seal these models.

Technical Characteristics

Mechanical and Climatical

Characteristics		Value	Standard
Endurance[1)]		> 5000 cycles	IEC 60512-5 test 9a
Humidity		up to 95% at 60° C	
Temperature range	0E-1E	- 20° C, + 100° C	
	2E-6E	- 20° C, + 80° C	
Salt spray corrosion test [4)]		> 1000h	IEC 60512-6 test 11f
Climatical category		20/80/21	IEC 60068-1
Leakage rate (He)[2)]		< 10^{-7} mbar.l.s^{-1}	IEC 60512-7 test 14b

Characteristics		Value	Standard
Maximum operating pressure[3)]	0E	60 bar	IEC 60512-7 test 14d
	1E	60 bar	IEC 60512-7 test 14d
	2E	40 bar	IEC 60512-7 test 14d
	3E	30 bar	IEC 60512-7 test 14d
	4E	15 bar	IEC 60512-7 test 14d
	5E	5 bar	IEC 60512-7 test 14d
	6E	5 bar	IEC 60512-7 test 14d

Note: [1)] see page 189, contact resistance after mating cycles. See page 185, mechanical endurance latching force.
[2)] only for vacuumtight models. Residual traces of grease used during (He) leak testing are on the o-ring. Please contact us for further details.
[3)] this value corresponds to the maximum allowed pressure difference for the assembled socket. [4)] for chrome plated product (« C » material code).

HGP Fixed socket, nut fixing, watertight or vacuumtight

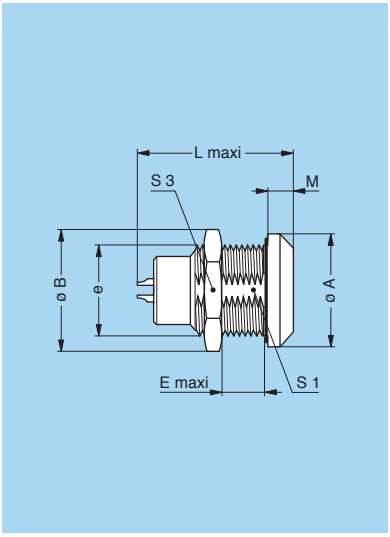

Reference		Dimensions (mm)								
Model	Series	A	B	e	E	L	L[1)]	M	S1	S3
HGP	**0E**	18	19.2	M14x1.0	5.5	23.5	22.0	4.0	12.5	17
HGP	**1E**	20	21.5	M16x1.0	9.0	29.5	28.0	4.5	14.5	19
HGP	**2E**	25	27.0	M20x1.0	10.5	32.5	28.0	5.0	18.5	24
HGP	**3E**	31	34.0	M24x1.0	15.5	39.5	38.5	6.0	22.5	30
HGP	**4E**	37	40.5	M30x1.0	17.5	43.0	44.0	6.5	28.5	36
HGP	**5E**	55	54.0	M45x1.5	20.0	52.0	76.0	9.0	42.5	–
HGP[2)]	**6E**	65	65.0	M55x2.0	20.5	52.0	–	10.0	52.0	–

P1 Panel cut-out (page 159)

Note: [1)] unipole model.
[2)] with key (G).

Note: The 5E and 6E series are delivered with a round nut.

EBR Fixed socket with round flange, watertight, protruding shell and screw fixing

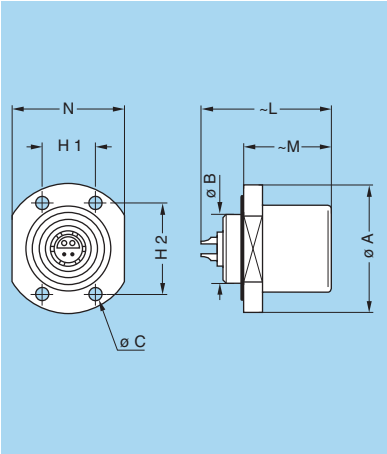

Reference		Dimensions (mm)								
Model	Series	A	B	C	H1	H2	L	L[1)]	M	N
EBR	**2E**	28	15	2.8	11.8	20.4	32.5	28	19	25

P6 Panel cut-out (page 159)

Note: 1) unipole model.

Note: This model is only available in a watertight version.

SWH Fixed coupler, nut fixing, watertight or vacuumtight

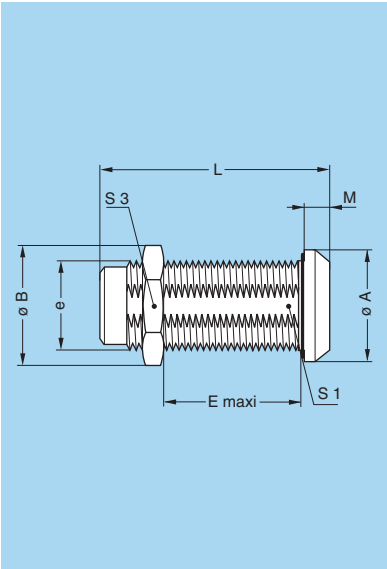

Reference		Dimensions (mm)							
Model	Series	A	B	e	E	L	M	S1	S3
SWH	**0E**	18	19.2	M14x1.0	22.5	36.0	4.0	12.5	17
SWH	**1E**	20	21.5	M16x1.0	30.5	47.0	4.5	14.5	19
SWH	**2E**	25	27.0	M20x1.0	28.0	52.4	5.0	18.5	24
SWH	**3E**	31	34.0	M24x1.0	33.0	64.2	6.0	22.5	30
SWH	**4E**	37	40.5	M30x1.0	44.5	70.0	6.5	28.5	36
SWH	**5E**	55	54.0	M45x1.5	47.0	81.0	9.0	42.5	–
SWH[1)]	**6E**	65	65.0	M55x2.0	12.0	76.0	10.0	–	–

P1 Panel cut-out (page 159)

Note: 1) with key (G).

Note: The 5E and 6E series are delivered with a round nut.

Note: See page 114 for the available plug and contact configurations and in order to ensure correct contact alignment.

Insert configuration (S and E series)

Unipole

Number of LV contacts	Solder contacts		Reference	Series: Standard	Series: Watertight	Contact ø (mm)	Contact type: Solder	Contact type: Crimp	Contact type: Print (straight)	Contact type: Print (elbow)	AWG: Solder (max.)	AWG: Crimp min.	AWG: Crimp max.	Test voltage (kV rms)[1]	Test voltage (kV dc)[1]	Rated current (A)[1]
1			113	00	–	1.3	●[2]	●	–	–	20	26	18	0.8	1.2	8
			116	0S	0E	1.6	●[2]	–	–	–	18	–	–	1.5	2.1	12
			120	1S	1E	2.0	●[2]	–	–	–	16	–	–	1.9	2.7	18
			130	1S	1E	3.0	●	–	–	–	12	–	–	1.5	2.1	25
				2S	2E	3.0	●	–	–	–	12	–	–	2.1	3.0	30
		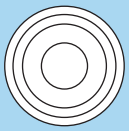	140	2S	2E	4.0	●	–	–	–	10	–	–	1.7	2.4	40
				3S	3E	4.0	●	–	–	–	10	–	–	2.3	3.3	43
				4S	–	4.0	●	–	–	–	10	–	–	3.0	4.2	46
			160	3S	3E	6.0	●	–	–	–	8	–	–	1.7	2.4	65
				4S	4E	6.0	●	–	–	–	8	–	–	2.7	3.9	70
	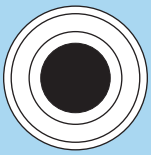	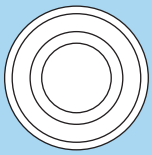	112	5S	5E	12.0	●	–	–	–	0	–	–	1.5	2.1	230

Note: [1] see calculation method, caution and suggested standard on page 190. [2] also available with inversed contacts: plug = female, socket = male.

● First choice alternative ○ Special order alternative

Multipole

Number of LV contacts	Solder contacts	Crimp contacts	Reference	Series: Standard	Series: Watertight	Contact ø (mm)	Contact type: Solder	Contact type: Crimp	Contact type: Print (straight)	Contact type: Print (elbow)	AWG: Solder (max.)	AWG: Crimp min.	AWG: Crimp max.	Test voltage (kV rms)[1) 2)]	Test voltage (kV dc)[1) 2)]	Rated current (A)[1)]
2	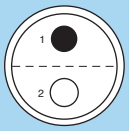	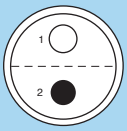	302	0S	0E	0.9	●	●	●	●	22	32	20	1.1	1.6	10[3)]
				1S	1E	1.3	●	●	●	●	20	26	18	1.2	1.8	15[3)]
				2S	2E	1.6	●	○	●	○	18	22	14	1.7	2.4	20[4)]
				3S	3E	2.0	●	–	○	–	16	–	–	3.0	4.2	23
				4S	4E	4.0	●	–	○	–	10	–	–	2.1	3.0	35
				5S	5E	6.0	●	–	–	–	8	–	–	3.7	5.2	50
3			303	0S	0E	0.7	●	●	●	●	26	32	22	1.0	1.5	7[3)]
				1S	1E	0.9	●	●	●	●	22	32	20	1.2	1.8	10[3)]
				2S	2E	1.3	●	○	●	○	20	26	18	1.5	2.1	15[4)]
				3S	3E	2.0	●	–	○	–	16	–	–	1.5	2.1	20
				4S	4E	3.0	●	–	○	–	12	–	–	2.1	3.0	25
				5S	5E	1x6.0 2x4.0	●	–	–	–	8 10	–	–	3.7	5.2	50 35
3	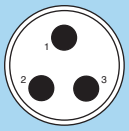	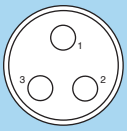	303													
				–	6E	6.0	●	–	–	–	8	–	–	3.0	4.2	50
4			304	0S	0E	0.7	●	●	●	●	26	32	22	1.0	1.5	7[3)]
				1S	1E	0.9	●	●	●	●	22	32	20	1.2	1.8	10[3)]
				2S	2E	1.3	●	○	●	●	20	26	18	1.7	2.4	15[4)]
				3S	3E	2.0	●	–	○	–	16	–	–	1.5	2.1	18
				4S	4E	3.0	●	–	○	–	12	–	–	2.1	3.0	22
				5S	5E	4.0	●	–	–	–	10	–	–	3.7	5.2	35
				6S	–	8.0	●	–	–	–	4	–	–	3.0	4.2	60
4		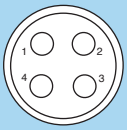	304													
				–	6E	8.0	●	–	–	–	4	–	–	3.0	4.2	60

Note: [1)] see calculation method, caution and suggested standard on page 190. [2)] lowest measured value; contact to contact or contact to shell.
[3)] rated current = 6A for socket with elbow (90°) contacts for printed circuit. [4)] rated current = 12A for socket with elbow (90°) contacts for printed circuit.

● First choice alternative ○ Special order alternative

Multipole

Number of LV contacts	Solder contacts / Crimp contacts	Reference	Series: Standard	Series: Watertight	Contact ø (mm)	Contact type: Solder	Contact type: Crimp	Contact type: Print (straight)	Contact type: Print (elbow)	AWG: Solder (max.)	AWG: Crimp min.	AWG: Crimp max.	Test voltage (kV rms)[1) 2)]	Test voltage (kV dc)[1) 2)]	Rated current (A)[1)]
5	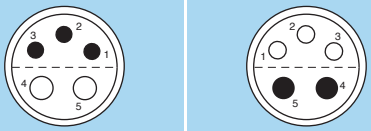	305	1S	1E	2x0.9 3x0.7	●	●	●	●	22 26	32	20 22	1.5	2.1	10[3)] 7[3)]
			2S	2E	1.3	●	○	●	●	20	26	18	1.5	2.1	13[4)]
			3S	3E	2x2.0 3x1.3	●	–	○	–	16 20	–	–	1.5	2.1	18 14
			4S	4E	2x3.0 3x2.0	●	–	○	–	12 16	–	–	2.1	3.0	22 16
			5S	5E	2x4.0 3x3.0	●	–	–	–	10 12	–	–	3.0	4.2	35 25
6	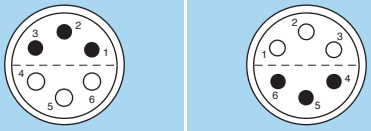	306	1S	1E	0.7	●	●	●	●	26	32	22	1.2	1.7	7[3)]
			2S	2E	1.3	●	●[4)]	●	●	20	26	18	1.5	2.1	12
			3S	3E	1.3	●	–	●	–	20	–	–	2.1	3.0	14
			4S	4E	2.0	●	–	○	–	16	–	–	2.1	3.0	16
			5S	5E	3.0	●	–	–	–	12	–	–	3.0	4.2	25
7	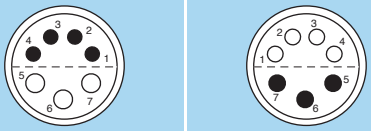	307													
			2S	2E	3x1.3 4x0.9	●	○	●	●	20 22	26 32	18 20	0.8	1.2	12[3)] 9[3)]
			3S	3E	1.3	●	–	●	–	20	–	–	1.0	1.5	12
			4S	4E	3x2.0 4x1.3	●	–	○	–	16 20	–	–	2.1	3.0	16 13
8	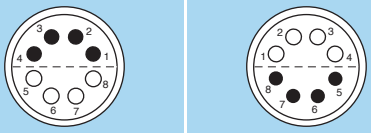	308	2S	2E	0.9	●	○	●	●	22	32	20	0.8	1.2	9[3)]
			3S	3E	1.3	●	–	●	○	20	–	–	1.0	1.5	10
			4S	4E	1.3	●	–	○	–	20	–	–	2.7	3.9	13
			5S	5E	3.0	●	–	–	–	12	–	–	2.1	3.0	22
9	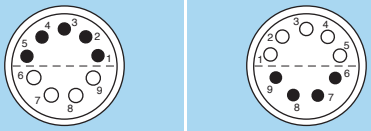	309	4S	4E	1.3	●	–	○	–	20	–	–	2.1	3.0	12
10	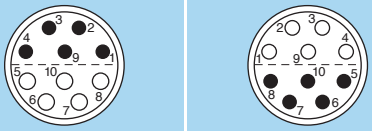	310	2S	2E	0.9	●	○	●	●	22	32	20	0.8	1.2	7[3)]
			3S	3E	1.3	●	–	●	●	20	–	–	1.0	1.5	9

Note: [1)] see calculation method, caution and suggested standard on page 190. [2)] lowest measured value; contact to contact or contact to shell. [3)] rated current = 6A for socket with elbow (90°) contacts for printed circuit. [4)] only for FFL model.

● First choice alternative ○ Special order alternative

Multipole

Number of LV contacts	Solder contacts	Crimp contacts	Reference	Series: Standard	Series: Watertight	Contact ø (mm)	Contact type: Solder	Contact type: Crimp	Contact type: Print (straight)	Contact type: Print (elbow)	AWG: Solder (max.)	AWG: Crimp min.	AWG: Crimp max.	Test voltage (kV rms)[1) 2)]	Test voltage (kV dc)[1) 2)]	Rated current (A)[1)]
10	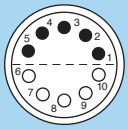	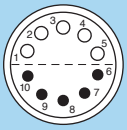	310	4S	4E	1.3	●	–	○	–	20	–	–	2.1	3.0	11
				5S	5E	2.0	●	–	–	–	16	–	–	2.1	3.0	18
12	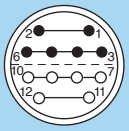	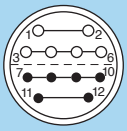	312	3S	3E	0.9	●	–	●	●	22	–	–	1.5	2.1	8
12		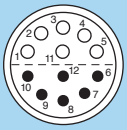	312	4S	4E	1.3	●	–	○	–	20	–	–	2.1	3.0	9
				6S	–	4.0	●	–	–	–	10	–	–	2.1	3.0	22
				–	6E	5.0	●	–	–	–	8	–	–	2.1	3.0	22
12	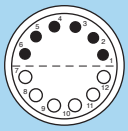	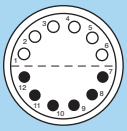	312	5S	5E	2.0	●	–	–	–	16	–	–	2.1	3.0	18
13	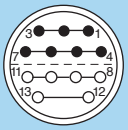	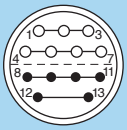	313	3S	3E	0.9	●	–	●	○	22	–	–	1.5	2.1	8
13	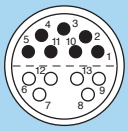		313	4S	–	1.3	●	–	○	–	20	–	–	2.1	3.0	9
14	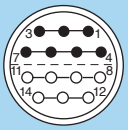	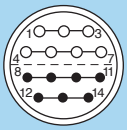	314	3S	3E	0.9	●	–	●	●	22	–	–	1.5	2.1	7

Note: [1)] see calculation method, caution and suggested standard on page 190. [2)] lowest measured value; contact to contact or contact to shell.

● First choice alternative ○ Special order alternative

Multipole

Number of LV contacts	Solder contacts	Crimp contacts	Reference	Series: Standard	Series: Watertight	Contact ø (mm)	Contact type: Solder	Contact type: Crimp	Contact type: Print (straight)	Contact type: Print (elbow)	AWG: Solder (max.)	AWG: Crimp min.	AWG: Crimp max.	Test voltage (kV rms)[1) 2)]	Test voltage (kV dc)[1) 2)]	Rated current (A)[1)]
14	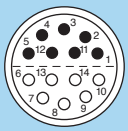	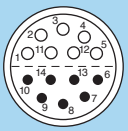	314	4S	4E	1.3	●	–	○	–	20	–	–	2.1	3.0	9
14	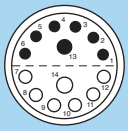	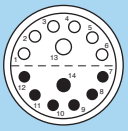	314	5S	5E	2x3.0 12x2.0	●	–	–	–	12 16	–	–	1.8	2.4	20 15
16	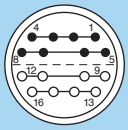	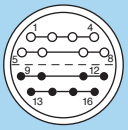	316	3S	3E	0.9	●	–	●	●	22	–	–	1.0	1.5	7
				4S	4E	0.9	●	–	○	–	22	–	–	2.1	3.0	7
16	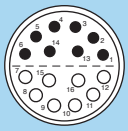	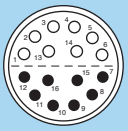	316	5S	5E	2.0	●	–	–	–	16	–	–	1.8	2.4	15
16	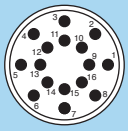	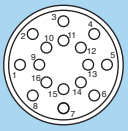	316	–	6E	3.0	●	–	–	–	12	–	–	1.5	2.1	14
18	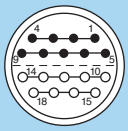	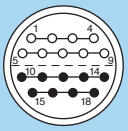	318	3S	3E	0.9	●	–	●	○	22	–	–	1.0	1.5	6
				4S	4E	0.9	●	–	○	–	22	–	–	2.1	3.0	7
18	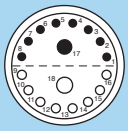	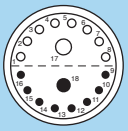	318	5S	5E	2x3.0 16x1.6	●	–	–	–	12 18	–	–	1.8	2.4	18 11

Note: [1)] see calculation method, caution and suggested standard on page 190. [2)] lowest measured value; contact to contact or contact to shell.

● First choice alternative ○ Special order alternative

Multipole

Number of LV contacts	Solder contacts	Crimp contacts	Reference	Series: Standard	Series: Watertight	Contact ø (mm)	Contact type: Solder	Contact type: Crimp	Contact type: Print (straight)	Contact type: Print (elbow)	AWG: Solder (max.)	AWG: Crimp min.	AWG: Crimp max.	Test voltage (kV rms)[1) 2)]	Test voltage (kV dc)[1) 2)]	Rated current (A)[1)]
18	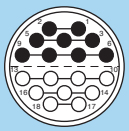	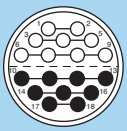	318	6S	–	4.0	●	–	–	–	10	–	–	1.2	1.8	16
20	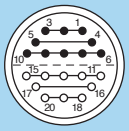	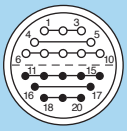	320	4S	4E	0.9	●	–	○	–	22	–	–	2.1	3.0	7
20	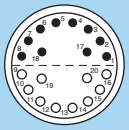	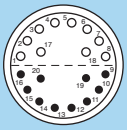	320	5S	5E	1.6	●	–	–	–	18	–	–	1.8	2.4	11
20		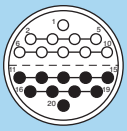	320	6S	–	3.0	●	–	–	–	12	–	–	1.5	2.1	14
20	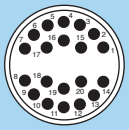	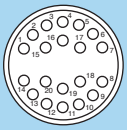	320	–	6E	3.0	●	–	–	–	12	–	–	1.5	2.1	14
22	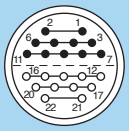	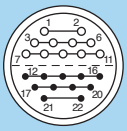	322	4S	4E	0.9	●	–	○	–	22	–	–	2.1	3.0	7
22	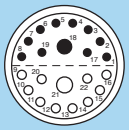	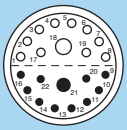	322	5S	5E	2x3.0 20x1.6	●	–	–	–	12 18	–	–	1.8	2.4	16 9

Note: [1)] see calculation method, caution and suggested standard on page 190. [2)] lowest measured value; contact to contact or contact to shell.

● First choice alternative ○ Special order alternative

Multipole

Number of LV contacts	Solder contacts	Crimp contacts	Reference	Series: Standard	Series: Watertight	Contact ø (mm)	Contact type: Solder	Contact type: Crimp	Contact type: Print (straight)	Contact type: Print (elbow)	AWG: Solder (max.)	AWG: Crimp min.	AWG: Crimp max.	Test voltage (kV rms)[1) 2)]	Test voltage (kV dc)[1) 2)]	Rated current (A)[1)]
24	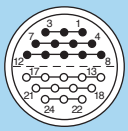	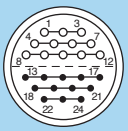	324	4S	4E	0.9	●	–	○	–	22	–	–	2.1	3.0	7
				5S	5E	1.6	●	–	–	–	18	–	–	2.7	3.9	9
				6S	–	3.0	●	–	–	–	12	–	–	1.2	1.8	12
24	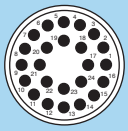	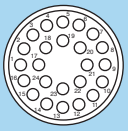	324	–	6E	3.0	●	–	–	–	12	–	–	1.2	1.8	12
30	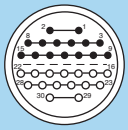	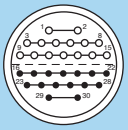	330	5S	5E	1.3	●	–	–	–	20	–	–	1.8	2.4	8
30	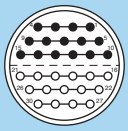	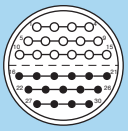	330	6S	6E	2.0	●	–	–	–	16	–	–	2.1	3.0	10
32	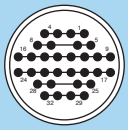	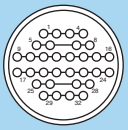	332	–	6E	2.0	●	–	–	–	16	–	–	1.5	2.1	10
36	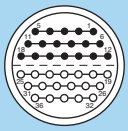	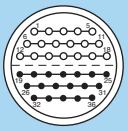	336	5S	5E	1.3	●	–	–	–	20	–	–	1.8	2.4	7
36	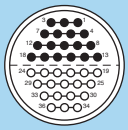	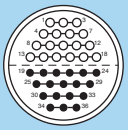	336	6S	–	2.0	●	–	–	–	16	–	–	1.5	2.1	8

Note: 1) see calculation method, caution and suggested standard on page 190. 2) lowest measured value; contact to contact or contact to shell.

● First choice alternative ○ Special order alternative

Multipole

Number of LV contacts	Solder contacts	Crimp contacts	Reference	Series: Standard	Series: Watertight	Contact ø (mm)	Contact type: Solder	Contact type: Crimp	Contact type: Print (straight)	Contact type: Print (elbow)	AWG: Solder (max.)	AWG: Crimp min.	AWG: Crimp max.	Test voltage (kV rms)[1) 2)]	Test voltage (kV dc)[1) 2)]	Rated current (A)[1)]
36		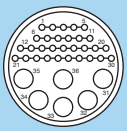	336	–	6E	30x1.3 6x5.0	●	–	–	–	20 8	–	–	1.5	2.1	4 22
40	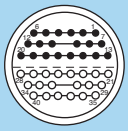	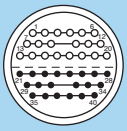	340	5S	5E	1.3	●	–	–	–	20	–	–	1.2	1.8	7
				–	6E	2.0	●	–	–	–	16	–	–	1.5	2.1	8
44	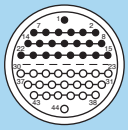	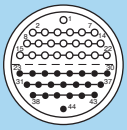	344	5S	5E	1.3	●	–	–	–	20	–	–	1.2	1.8	6
48	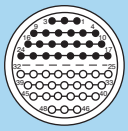	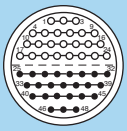	348	5S	5E	1.3	●	–	–	–	20	–	–	1.2	1.8	6
				6S	6E	2.0	●	–	–	–	16	–	–	1.5	2.1	7
60	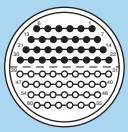	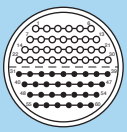	360	6S	6E	1.6	●	–	–	–	18	–	–	1.5	2.1	5
62	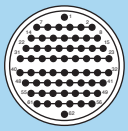	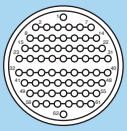	362		6E	1.6	●	–	–	–	18	–	–	1.5	2.1	5
64	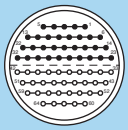	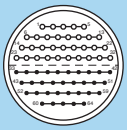	364	6S	6E	1.3	●	–	–	–	20	–	–	1.2	1.8	4

Note: [1)] see calculation method, caution and suggested standard on page 190. [2)] lowest measured value; contact to contact or contact to shell.

● First choice alternative ○ Special order alternative

Multipole

Number of LV contacts	Solder contacts	Crimp contacts	Reference	Series: Standard	Series: Watertight	Contact ø (mm)	Contact type: Solder	Contact type: Crimp	Contact type: Print (straight)	Contact type: Print (elbow)	AWG: Solder (max.)	AWG: Crimp min.	AWG: Crimp max.	Test voltage (kV rms)[1) 2)]	Test voltage (kV dc)[1) 2)]	Rated current (A)[1)]
72	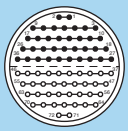	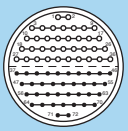	372	6S	6E	1.3	●	–	–	–	20	–	–	1.2	1.8	4
106	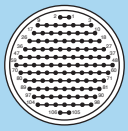		106	–	6E	0.9	●	–	–	–	22	–	–	0.8	1.2	2
106			106	6S	–	0.9	●	–	–	–	22	–	–	0.8	1.2	2

Note: 1) see calculation method, caution and suggested standard on page 190. 2) lowest measured value; contact to contact or contact to shell.

● First choice alternative ○ Special order alternative

Housings (S and E series)

Ref.	Outer shell and collet nut		Latch sleeve + earthing crown		Other metallic components		Remarks	Note
	Material	Surf. treatment	Material	Surf. treatment	Material	Surf. treatment		
C	Brass	chrome	brass/bronze	nickel 2)	brass	nickel		●
D	Brass	gold-plated	brass/bronze	nickel 2)	brass	nickel		○
N	Brass	nickel	brass/bronze	nickel 2)	brass	nickel		○
K	Brass	black chrome 3)	brass/bronze	nickel 2)	brass	nickel		●
S	Stainless steel	–	brass/bronze	nickel 2)	brass	nickel		○
T	Stainless steel	–	stainless steel	–	brass	nickel		○
U	Stainless steel	–	stainless steel	–	stainless steel	–		○
L	Aluminium alloy	anodized	brass/bronze	nickel 2)	brass	nickel	1)	○
B	POM (black)	–	brass/bronze	nickel 2)	brass	nickel	Only for FFP, ERN and PCP (S series)	●
G	PEEK (natural)	–	brass/bronze	nickel 2)	brass	nickel	Only for FFP, ERN and PCP (S series)	●
P	PSU	–	brass/bronze	nickel 2)	brass	nickel	Only for FFL (S series) 1)	●
R	PPSU	–	brass/bronze	nickel 2)	brass	nickel	Only for FFL (S series) 1)	●
H	PPS/brass	–/nickel	brass/bronze	nickel 2)	brass	nickel	Only for EPL and EXP (S series)	●

Note: detailed characteristics of these materials and treatments are presented on page 182.
1) see «variant» for the colour.
2) in the E series, the latch sleeve is chrome-plated.
3) surface not conductive use socket with earthing tag (ERN model) to carry shield.

● First choice alternative
○ Special order alternative

Insulators (S and E series)

Ref.	Material	Contact type	Remarks	Note
L	PEEK	Solder or print		●
Y	PEEK	Crimp		●
T	PTFE	Solder	only for unipole types	●
T	FEP	Solder	only for multipole types of the S or E series	○
V	PI	Solder	only for multipole types of the S or E series	○
N	PA6.6	Solder	material for 5S/5E and 6S/6E series multipole inserts	●

Note: detailed characteristics of these materials are presented on page 187.

● First choice alternative ○ Special order alternative

Contacts (S and E series)

Soldering characteristics

- no need to order specific tools, a simple soldering iron is sufficient
- ideal for very small and fragile conductors
- contacts with solder cups to allow the solder to flow

Note: see page 188 for more information.

Crimping characteristics

- practical, quick contact fixing outside the insulator
- possible use at high temperature
- need to order specific tools
- no risk of heating the insulator during the conductor-contact fixing
- high tensile strength
- totally lead-free solution

Contacts reference for plugs, free or fixed sockets

Contact type	Reference		Contact			Conductor						F_r [1] (N)	Notes
						Solid		Stranded					
								AWG		Section (mm²)			
	Male	Female	ø A (mm)	ø C (mm)	Form per fig.	AWG max.	Section max. (mm²)	min.	max.	min.	max.		
Solder 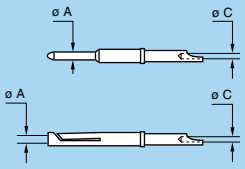	A	L	0.5	0.45	–	28	0.09	–	28	–	0.09	–	●
			0.7	0.60	–	24	0.25	–	26	–	0.14	–	
			0.9	0.80	–	22	0.34	–	22[2]	–	0.34	–	
			1.3	1.00	–	20	0.50	–	20[2]	–	0.50	–	
			1.6	1.40	–	16	1.00	–	18	–	1.00	–	
			2.0	1.80	–	14	1.50	–	16	–	1.50	–	
			3.0	2.70	–	10	4.00	–	12	–	4.00	–	
			4.0	3.70	–	10	6.00	–	10	–	6.00	–	
			5.0	5.20	–	–	–	–	8	–	10.00	–	
			6.0	5.20	–	–	–	–	8	–	10.00	–	
			8.0	7.00	–	–	–	–	4	–	21.00	–	
			12.0	11.50	–	–	–	–	0	–	50.00	–	
Crimp fig. 1 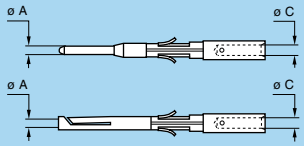	C	M	0.7	0.80	1	–	–	26	22[2]	0.140	0.34	22	●
	B	P	0.7	0.45	2	–	–	32	28	0.035	0.09	22	○
	C	M	0.9	1.10	1	–	–	24	20	0.250	0.50	30	●
	B	P	0.9	0.80	2	–	–	26	22[2]	0.140	0.34	30	○
	G	U	0.9	0.45	2	–	–	32	28	0.035	0.09	30	○
	C	M	1.3	1.40	1	–	–	20	18	0.500	1.00	40	●
fig. 2 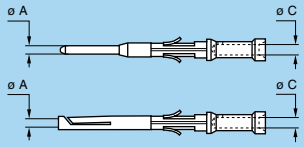	B	P	1.3	1.10	2	–	–	24	20	0.250	0.50	40	○
	G	U	1.3	0.80	2	–	–	26	22[2]	0.140	0.34	40	○
	C	M	1.6	1.90	1	–	–	18	14[2]	1.000	1.50	50	●
	B	P	1.6	1.40	2	–	–	22	18	0.340	1.00	50	○
	C	M	2.0	2.40	1	–	–	16	12[2]	1.500	2.50	65	●
	B	P	2.0	1.90	2	–	–	18	14	1.500	1.50	65	○
Print 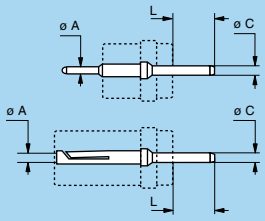	D	N	L dimensions and C are detailed in the section on PCB drilling pattern. See page 167.										●
Print (elbow) 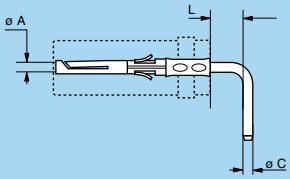	V	V	L dimensions and C are detailed in the section on PCB drilling pattern. See page 168.										●

Note: [1] contact retention force in the insulator (according to IEC 60512-8 test 15 a).
[2] for a given AWG, the diameter of some stranded conductor designs is larger than the solder cup diameter. Make sure that the maximum conductor diameter is smaller than ø C.

● First choice alternative ○ Special order alternative

Contacts reference for coupler and plug with socket

Ref.	Contact type	Remarks
A	Male - Female	contact configuration is explained below
L	Female - Male	contact configuration is explained below
M	Female - Female	contact configuration is explained below

Contacts reference for fixed and free couplers RMA, RAD and SWH

A **Male - Female**

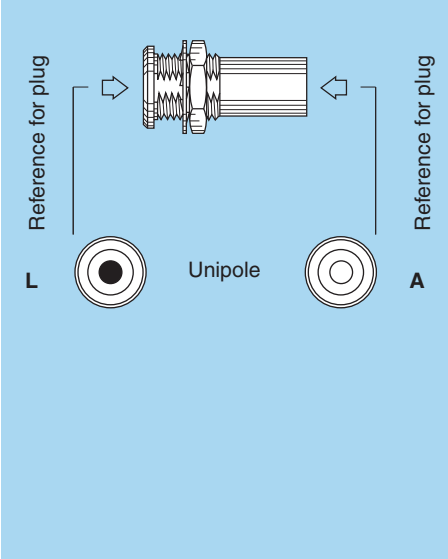

L **Female - Male**

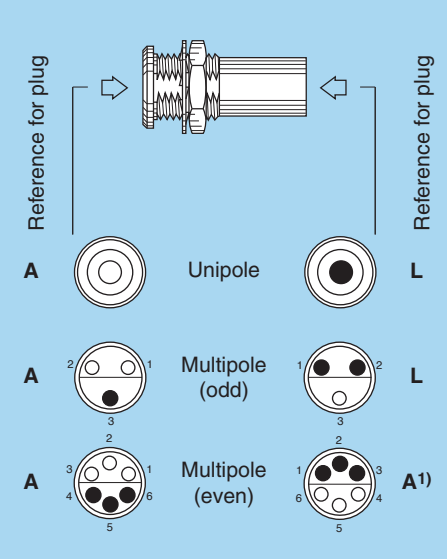

M **Female - Female**

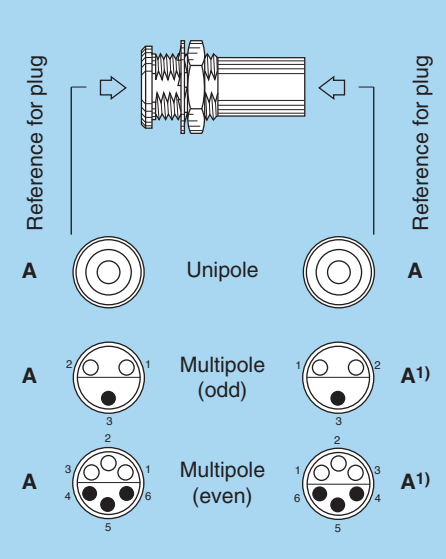

Use of plugs for mating with RAD, RMA and SWH couplers

Unipole type:

Reference M for coupling two identical plugs fitted with male contact (contact reference A).
Reference L for coupling a plug fitted with male contacts (contact reference A) at the flange end for RAD and SWH and an inverted plug fitted with female contacts (contact reference L) at the other end.
Reference A for the inverted version of code L.

Multipole type:

Reference L for coupling a standard plug (contact reference A) at the flange end for RAD and SWH and an inverted plug (contact reference as indicated in the above table) at the other end.
Reference M for coupling two standard plugs (contact type A).
Only available for RAD and RMA models.

Note: 1) this connector combination does not allow for contact numbering. One of the plugs has to be cable mounted in a way to ensure correct signal continuity.

Collets (S and E series)

C, K and L type collets for S series

C type

K type
oversize
cable collet

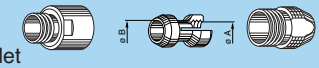

L type
(non EMC)

	Reference		Collet ø		Cable ø		Notes
	Type	Code	ø A	ø B	max.	min.	
00	C	17	1.7	1.5	1.7	1.3	
	C	22	2.2	–	2.2	> 1.7	
	C	27	2.7	–	2.7	> 2.2	
	C	31	3.1	2.7	3.1	> 2.7	
	K	37	3.7	–	3.7	> 3.2	
	K	42	4.2	3.7	4.4	> 3.7	
	L	27	2.7	–	2.6	2.2	2)
	L	31	3.1	–	3.0	2.6	2)
0S	C	22	2.2	–	2.2	1.3	3)
	C	32	3.2	–	3.2	> 2.2	
	C	37	3.7	–	3.7	> 3.2	
	C	44	4.4	3.7	4.4	> 3.7	
	K	52	5.2	–	5.2	> 4.2	
	K	57	5.7	5.2	5.7	> 5.2	
	K	62	6.2	5.2	6.2	> 5.7	
	L	22	2.2	–	2.2	1.3	2)
	L	32	3.2	–	3.2	> 2.2	2)
	L	37	3.7	–	3.7	> 3.2	2)
	L	44	4.4	–	4.3	3.5	1) 2)
	L	48	4.8	–	4.8	4.4	1) 2)
1S	C	22	2.2	–	2.2	1.4	
	C	32	3.2	–	3.2	> 2.2	
	C	42	4.2	–	4.2	> 3.2	
	C	52	5.2	–	5.2	> 4.2	
	C	57	5.7	5.2	5.7	> 5.2	
	C	62	6.2	5.2	6.2	> 5.7	
	K	72	7.2	–	7.2	> 6.2	
	K	82	8.2	6.7	8.2	> 7.2	
	K	87	8.7	6.7	8.7	> 8.2	

	Reference		Collet ø		Cable ø		Notes
	Type	Code	ø A	ø B	max.	min.	
1S	L	22	2.2	–	2.2	1.2	2)
	L	32	3.2	–	3.2	> 2.2	2)
	L	42	4.2	–	4.2	> 3.2	2)
	L	52	5.2	–	5.2	> 4.2	2)
	L	62	6.2	–	6.2	> 5.2	2)
	L	66	6.6	–	6.5	5.9	1) 2)
2S	C	27	2.7	–	2.7	1.3	
	C	32	3.2	–	3.2	> 2.5	
	C	42	4.2	–	4.2	> 3.2	
	C	52	5.2	–	5.2	> 4.2	
	C	62	6.2	–	6.2	> 5.2	
	C	72	7.2	6.7	7.2	> 6.2	
	C	82	8.2	6.7	8.2	> 7.2	
	C	87	8.7	6.7	8.7	> 8.2	
	K	97	9.7	9.0	9.7	> 8.7	
	K	11	10.5	9.0	10.5	> 9.5	
	L	32	3.2	–	3.2	2.5	2)
	L	42	4.2	–	4.2	> 3.2	2)
	L	52	5.2	–	5.2	> 4.2	2)
	L	62	6.2	–	6.2	> 5.2	2)
	L	72	7.2	–	7.2	> 6.2	2)
	L	82	8.2	–	8.2	> 7.2	2)
	L	87	8.7	–	8.7	> 8.2	1) 2)

Note: All dimensions are in millimetres.
1) these collets cannot be used for connectors models with nut for fitting a bend relief. 2) these collets cannot be used for elbow connectors. 3) the inner diameter of the smallest bend relief available is 2.5 mm.

C, K and L type collets for S series

C type

K type
oversize
cable collet

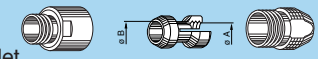

L type
(non EMC)

	Reference		Collet ø		Cable ø		Notes
	Type	Code	ø A	ø B	max.	min.	
3S	C	42	4.2	7.7	4.2	2.6	
	C	57	5.7	7.7	5.7	4.3	
	C	72	7.2	7.7	7.2	5.8	
	C	87	8.7	8.7	8.7	7.3	
	C	97	9.7	9.0	9.7	8.8	
	C	11	10.5	9.0	10.5	9.8	
	K	12	12.2	–	12.0	11.1	
	K	13	13.2	12.2	13.0	12.1	
	L	42	4.2	–	4.2	2.6	2)
	L	57	5.7	–	5.7	> 4.2	2)
	L	72	7.2	–	7.2	> 5.7	2)
	L	87	8.7	–	8.7	> 7.2	2)
	L	97	9.7	–	9.7	> 8.7	2)
	L	11	10.7	–	10.7	> 9.7	1) 2)
4S	C	52	5.2	–	5.0	4.1	
	C	62	6.2	–	6.0	5.1	
	C	72	7.2	–	7.0	6.1	
	C	82	8.2	–	8.0	7.1	
	C	92	9.2	–	9.0	8.1	
	C	10	10.2	–	10.0	9.1	
	C	11	11.2	–	11.0	10.1	

	Reference		Collet ø		Cable ø		Notes
	Type	Code	ø A	ø B	max.	min.	
4S	C	12	12.2	–	12.0	11.1	
	C	13	13.2	12.2	13.0	12.6	
	K	14	14.2	–	14.0	13.1	1)
	K	15	15.2	–	15.0	14.1	1)
	K	16	16.2	–	16.0	15.1	1)
	K	17	17.2	–	17.0	16.1	1)
	K	18	18.2	–	18.0	17.1	1)
	K	19	19.2	–	19.0	18.1	1)
	K	20	20.2	19.7	20.0	19.1	1)
	K	21	21.2	19.7	21.0	20.1	1)
	K	22	22.2	19.7	22.0	21.1	1)
	L	52	5.2	–	5.0	4.1	2)
	L	62	6.2	–	6.0	5.1	2)
	L	72	7.2	–	7.0	6.1	2)
	L	82	8.2	–	8.0	7.1	2)
	L	92	9.2	–	9.0	8.1	2)
	L	10	10.2	–	10.0	9.1	2)
	L	11	11.2	–	11.0	10.1	2)
	L	12	12.2	–	12.0	11.1	2)
	L	13	13.2	–	13.0	12.6	2)

Note: All dimensions are in millimetres.
1) these collets cannot be used for connectors models with nut for fitting a bend relief.
2) these collets cannot be used for elbow connectors.

C, K and L type collets for S series

C type

K type
oversize
cable collet

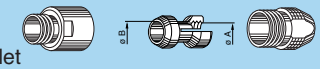

L type
(non EMC)

5S

Reference		Collet ø		Cable ø		Notes
Type	Code	ø A	ø B	max.	min.	
C	72	7.2	–	7.0	6.1	1)
C	82	8.2	–	8.0	7.1	1)
C	92	9.2	–	9.0	8.1	1)
C	10	10.2	–	10.0	9.1	1)
C	11	11.2	–	11.0	10.1	1)
C	12	12.2	–	12.0	11.1	1)
C	13	13.2	–	13.0	12.1	1)
C	14	14.2	–	14.0	13.1	1)
C	15	15.2	–	15.0	14.1	1)
C	16	16.2	–	16.0	15.1	1)
C	17	17.2	–	17.0	16.1	1)
C	18	18.2	–	18.0	17.1	1)
C	19	19.2	–	19.0	18.1	1)
C	20	20.2	19.7	20.0	19.1	1)
C	21	21.2	19.7	21.0	20.1	1)
C	22	22.2	19.7	22.0	21.1	1)
K	23	23.2	–	23.0	22.1	1)
K	24	24.2	–	24.0	23.1	1)
K	25	25.2	–	25.0	24.1	1)

5S

Reference		Collet ø		Cable ø		Notes
Type	Code	ø A	ø B	max.	min.	
K	26	26.2	–	26.0	25.1	1)
K	27	27.2	–	27.0	26.1	1)
K	28	28.2	27.2	28.0	27.1	1)
K	29	29.2	27.2	29.0	28.1	1)
K	30	30.2	27.2	30.0	29.1	1)
L	92	9.2	–	9.0	8.1	1) 2)
L	10	10.2	–	10.0	9.1	1) 2)
L	11	11.2	–	11.0	10.1	1) 2)
L	12	12.2	–	12.0	11.1	1) 2)
L	13	13.2	–	13.0	12.1	1) 2)
L	14	14.2	–	14.0	13.1	1) 2)
L	15	15.2	–	15.0	14.1	1) 2)
L	16	16.2	–	16.0	15.1	1) 2)
L	17	17.2	–	17.0	16.1	1) 2)
L	18	18.2	–	18.0	17.1	1) 2)
L	19	19.2	–	19.0	18.1	1) 2)
L	20	20.2	–	20.0	19.1	1) 2)
L	21	21.2	–	21.0	20.1	1) 2)

Note: All dimensions are in millimetres.
The 5S.112 is only available with L type of collet.
1) these collets cannot be used for connectors models with nut for fitting a bend relief.
2) these collets cannot be used for elbow connectors.

C, K and L type collets for S series

C type

K type
oversize
cable collet

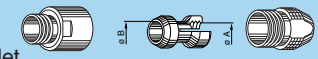

L type
(non EMC)

6S

Reference		Collet ø		Cable ø		Notes
Type	Code	ø A	ø B	max.	min.	
C	12	12.2	–	12.0	11.1	1)
C	13	13.2	–	13.0	12.1	1)
C	14	14.2	–	14.0	13.1	1)
C	15	15.2	–	15.0	14.1	1)
C	16	16.2	–	16.0	15.1	1)
C	17	17.2	–	17.0	16.1	1)
C	18	18.2	–	18.0	17.1	1)
C	19	19.2	–	19.0	18.1	1)
C	20	20.2	–	20.0	19.1	1)
C	21	21.2	–	21.0	20.1	1)
C	22	22.2	–	22.0	21.1	1)
C	23	23.2	–	23.0	22.1	1)
C	24	24.2	–	24.0	23.1	1)
C	25	25.2	–	25.0	24.1	1)
C	26	26.2	–	26.0	25.1	1)
C	27	27.2	–	27.0	26.1	1)
C	28	28.2	27.2	28.0	27.1	1)
C	29	29.2	27.2	29.0	28.1	1)
C	30	30.2	27.2	30.0	29.1	1)

6S

Reference		Collet ø		Cable ø		Notes
Type	Code	ø A	ø B	max.	min.	
L	12	12.2	–	12.0	11.1	1) 2)
L	13	13.2	–	13.0	12.1	1) 2)
L	14	14.2	–	14.0	13.1	1) 2)
L	15	15.2	–	15.0	14.1	1) 2)
L	16	16.2	–	16.0	15.1	1) 2)
L	17	17.2	–	17.0	16.1	1) 2)
L	18	18.2	–	18.0	17.1	1) 2)
L	19	19.2	–	19.0	18.1	1) 2)
L	20	20.2	–	20.0	19.1	1) 2)
L	21	21.2	–	21.0	20.1	1) 2)
L	22	22.2	–	22.0	21.1	1) 2)
L	23	23.2	–	23.0	22.1	1) 2)
L	24	24.2	–	24.0	23.1	1) 2)
L	25	25.2	–	25.0	24.1	1) 2)
L	26	26.2	–	26.0	25.1	1) 2)
L	27	27.2	–	27.0	26.1	1) 2)
L	28	28.2	–	28.0	27.1	1) 2)
L	29	29.2	–	29.0	28.1	1) 2)
L	30	30.2	–	30.0	29.1	1) 2)

Note: All dimensions are in millimetres.
1) these collets cannot be used for connectors models with nut for fitting a bend relief.
2) these collets cannot be used for elbow connectors..

C and K type collets for E series

C type

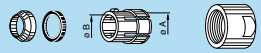

K type
oversize
cable collet

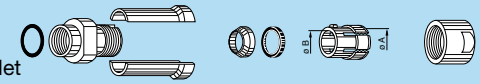

	Reference		Collet ø		Cable ø		Notes
	Type	Code	ø A	ø B	max.	min.	
0E	C	10	1.6	–	1.2	1.0	1)
	C	15	1.6	–	1.5	1.3	1)
	C	20	2.1	–	2.0	1.6	1)
	C	25	3.1	–	2.5	2.1	
	C	30	3.1	–	3.0	2.6	
	C	35	4.2	4.2	3.5	3.1	
	C	40	4.2	4.2	4.0	3.6	
	C	45	5.2	5.2	4.5	4.1	
	C	50	5.2	5.2	5.0	4.6	
1E	C	15	1.6	–	1.5	1.3	
	C	20	2.2	–	2.0	1.6	
	C	25	3.2	–	2.5	2.1	
	C	30	3.2	–	3.0	2.6	
	C	35	4.2	–	3.5	3.1	
	C	40	4.2	–	4.0	3.6	
	C	45	5.2	–	4.5	4.1	
	C	50	5.2	–	5.0	4.6	
	C	55	6.2	6.2	5.5	5.1	
	C	60	6.2	6.2	6.0	5.6	
	C	65	7.2	6.7	6.5	6.1	
	K	70	7.2	–	7.0	6.6	3)
	K	75	8.2	8.2	7.5	7.1	3)
	K	80	8.2	8.2	8.0	7.6	3)
	K	85	9.2	8.6	8.5	8.1	3)
2E	C	15	2.2	–	1.5	1.3	
	C	20	2.2	–	2.0	1.6	
	C	25	3.2	–	2.5	2.1	
	C	30	3.2	–	3.0	2.6	
	C	35	4.2	–	3.5	3.1	
	C	40	4.2	–	4.0	3.6	
	C	45	5.2	–	4.5	4.1	
	C	50	5.2	–	5.0	4.6	
	C	55	6.2	–	5.5	5.1	
	C	60	6.2	–	6.0	5.6	
	C	65	7.2	–	6.5	6.1	

	Reference		Collet ø		Cable ø		Notes
	Type	Code	ø A	ø B	max.	min.	
2E	C	70	7.2	–	7.0	6.6	
	C	75	8.2	8.2	7.5	7.1	
	C	80	8.2	8.2	8.0	7.6	
	C	85	9.2	8.6	8.5	8.1	
	K	90	9.2	–	9.0	8.6	4)
	K	95	10.2	10.2	9.5	9.1	4)
	K	10	10.2	10.2	10.0	9.6	4)
	K	11	11.2	10.6	10.5	10.1	4)
3E	C	30	3.2	–	3.0	2.6	
	C	35	4.2	–	3.5	3.1	
	C	40	4.2	–	4.0	3.6	
	C	45	5.2	–	4.5	4.1	
	C	50	5.2	–	5.0	4.6	
	C	55	6.2	–	5.5	5.1	
	C	60	6.2	–	6.0	5.6	
	C	65	7.2	–	6.5	6.1	
	C	70	7.2	–	7.0	6.6	
	C	75	8.2	–	7.5	7.1	
	C	80	8.2	–	8.0	7.6	
	C	85	9.2	–	8.5	8.1	
	C	90	9.2	–	9.0	8.6	
	C	95	10.2	10.2	9.5	9.1	
	C	10	10.2	10.2	10.0	9.6	
	C	11	11.2	10.6	10.5	10.1	
	K	11	12.3	–	12.0	10.6	5)
	K	12	13.8	13.8	12.8	12.1	5)
	K	13	13.8	13.8	13.5	12.9	5)
	K	14	15.3	15.3	14.0	13.6	5)
	K	15	15.3	15.3	15.0	14.1	2)

Note: all dimensions are in millimetres.
1) the inner diameter of the smallest bend relief available is 2.5 mm.
2) the inner diameter of the largest bend relief available is 14.5 mm.
3) for 2B bend relief.
4) for 3B bend relief.
5) for 4B bend relief.

C and K type collets for E series

C type

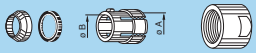

K type
oversize
cable collet

C type

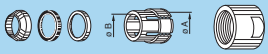

4E

Reference		Collet ø		Cable ø		Notes
Type	Code	ø A	ø B	max.	min.	
C	50	6.3	–	5.0	4.8	
C	55	6.3	–	5.5	5.1	
C	60	6.3	–	6.0	5.6	
C	65	7.3	–	6.5	6.1	
C	70	7.3	–	7.0	6.6	
C	75	8.3	–	7.5	7.1	
C	80	8.3	–	8.0	7.6	
C	85	9.3	–	8.5	8.1	
C	90	9.3	–	9.0	8.6	
C	95	10.8	–	9.5	9.1	
C	10	10.8	–	10.5	9.6	
C	11	12.3	–	12.0	10.6	
C	12	13.8	13.8	12.8	12.1	
C	13	13.8	13.8	13.5	12.9	
C	14	15.3	15.3	14.0	13.6	
C	15	15.3	15.3	15.0	14.1	2)
K	16	17.8	–	16.5	15.6	1)
K	17	17.8	–	17.5	16.6	1)
K	18	19.8	–	18.5	17.6	1)
K	19	19.8	–	19.5	18.6	1)
K	20	21.8	–	20.5	19.6	1)
K	21	21.8	–	21.5	20.6	1)
K	22	23.8	23.8	22.5	21.6	1)
K	23	23.8	23.8	23.5	22.6	1)

5E

Reference		Collet ø		Cable ø		Notes
Type	Code	ø A	ø B	max.	min.	
C	10	11.8	–	10.5	9.6	
C	11	11.8	–	11.5	10.6	
C	12	13.8	–	12.5	11.6	
C	13	13.8	–	13.5	12.6	
C	14	15.8	–	14.5	13.6	
C	15	15.8	–	15.5	14.6	1)
C	16	17.8	–	16.5	15.6	1)
C	17	17.8	–	17.5	16.6	1)
C	18	19.8	–	18.5	17.6	1)
C	19	19.8	–	19.5	18.6	1)
C	20	21.8	–	20.5	19.6	1)
C	21	21.8	–	21.5	20.6	1)
C	22	23.8	23.8	22.5	21.6	1)
C	23	23.8	23.8	23.5	22.6	1)

6E

Reference		Collet ø		Cable ø		Notes
Type	Code	ø A	ø B	max.	min.	
C	14	14.2	–	14.0	13.0	1)
C	15	15.2	–	15.0	14.1	1)
C	16	15.7	–	15.5	14.6	1)
C	17	16.7	–	16.5	15.6	1)
C	18	18.2	–	18.0	17.1	1)
C	21	23.2	–	21.5	20.6	1)
C	22	23.2	–	22.0	21.1	1)
C	23	23.2	–	23.0	22.1	1)
C	27	27.2	–	27.0	26.1	1)
L	30	30.2	–	30.0	29.5	1)

Note: all dimensions are in millimetres.
1) these collets cannot be used for connector models with nut for fitting a bend relief. No bend relief available for this cable size.
2) the inner diameter of the largest bend relief available is 14.5 mm.

Variant (S and E series)

Bend relief for S series models with collet

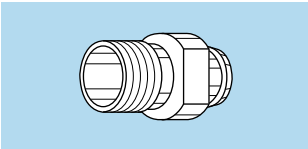

Need to be ordered

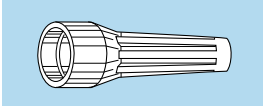

	Ref.	Collet Type	Collet Code	Need to be ordered separately (see pages 145 and 146)
00	Z	C	17 to 31	GMA.00.0●●.D●
		K	37 to 42	GMA.0B.0●●.D●
		L	27 to 31	GMA.00.0●●.D●
0S	Z	C	32 to 44	GMA.0B.0●●.D●
		K	52 to 62	GMA.1B.0●●.D●
		L	32 to 48	GMA.0B.0●●.D●
1S	Z	C	32 to 62	GMA.1B.0●●.D●
		K	72 to 87	GMA.2B.0●●.D●
		L	32 to 66	GMA.1B.0●●.D●
2S	Z	C	42 to 87	GMA.2B.0●●.D●
		K	97 to 11	GMA.3B.0●●.D●
		L	42 to 87	GMA.2B.0●●.D●
3S	Z	C	57 to 97	GMA.3B.0●●.D●
		K	12 to 13	GMA.4B.0●●.D●
		L	57 to 97	GMA.3B.0●●.D●
4S	Z	C	82 to 13	GMA.4B.0●●.D●
		L	82 to 13	GMA.4B.0●●.D●

Bend relief for E series models with collet

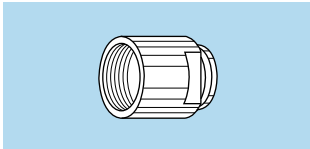

Need to be ordered

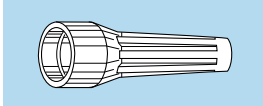

	Ref.	Collet Type	Collet Code	Need to be ordered separately (see pages 145 and 146)
0E	Z	C	10 to 50	GMA.0B.●●●.●●
1E	Z	C	15 to 65	GMA.1B.●●●.●●
		K	70 to 85	GMA.2B.●●●.●●
2E	Z	C	15 to 85	GMA.2B.●●●.●●
		K	90 to 10	GMA.3B.●●●.●●
3E	Z	C	30 to 10	GMA.3B.●●●.●●
		K	11 to 15 [1]	GMA.4B.●●●.●●
4E	Z	C	50 to 15 [2]	GMA.4B.●●●.●●
5E	Z	C	10 to 14	GMA.4B.●●●.●●

Note: all dimensions are in millimetres.
[1] for K15 see page 119.
[2] for C15 see page 120.

Colour of connectors shell made of plastic material and aluminium alloys

Ref.	Colour	Plastic shell			Aluminium alloys	
		PSU	PPSU	PA.6	Anodized colour	Anodized colour for bend relief collet nut
A	blue			●	●	
B	white	●		●		
G	grey	●		●		
J	yellow			●	●	
M	brown			●		
N	black			●	●	
R	red			●	●	
S	orange			●		
T	natural				●	
V	green			●	●	
L	black					●
X	natural					●
F	cream		●			

Note: other anodizing colours are available for connectors with collet nut for bend relief. Please consult us.

Watertight and vacumtight socket and coupler models (S and E series) (not connected)

	Reference		Model
	Watertight	Vacuumtight	
S	P	PV	EWB, HCP, HGP, HGW, SWH
E	P	PV	EBR, HGP, SWH

O-ring and gasket material (E series)

Standard connectors are delivered with silicone o-ring and gaskets. The vacuumtight models, identified with the letter «PV», are delivered with Viton® gaskets. Other gaskets material can be delivered upon special request.

Ref.	O-ring material
H	FPM (Viton®)
E	EPDM
D	FPM (Viton®) and collet nut for bend relief

M Series

The M Series connector offers a new innovative design for avionics, aerospace, military, security, motorsport and heavy duty applications.
Made of high-strength aluminium, this connector is one of the lightest and most compact of the LEMO product line.
A one-grip ratchet screw system enables quick and secure coupling of the connectors. The arctic grip makes it easy to manipulate the connector while wearing gloves or when the connector is located in a difficult to access area.

Features
- Ratchet-coupling mechanism
- Compact design for space savings
- Oil and fuel resistant
- 360° screening for full EMC shielding
- Colour coding / keying
- Scoop proof
- Threaded for MIL-DTL-38999L backshell
- Quick mating: less than 3/4 turn to seat
- Lightweight
- High vibration and shock resistance
- Sealed to IP68 when mated
- Reverse gender configuration
- Pin configuration from 2 to 114 contacts

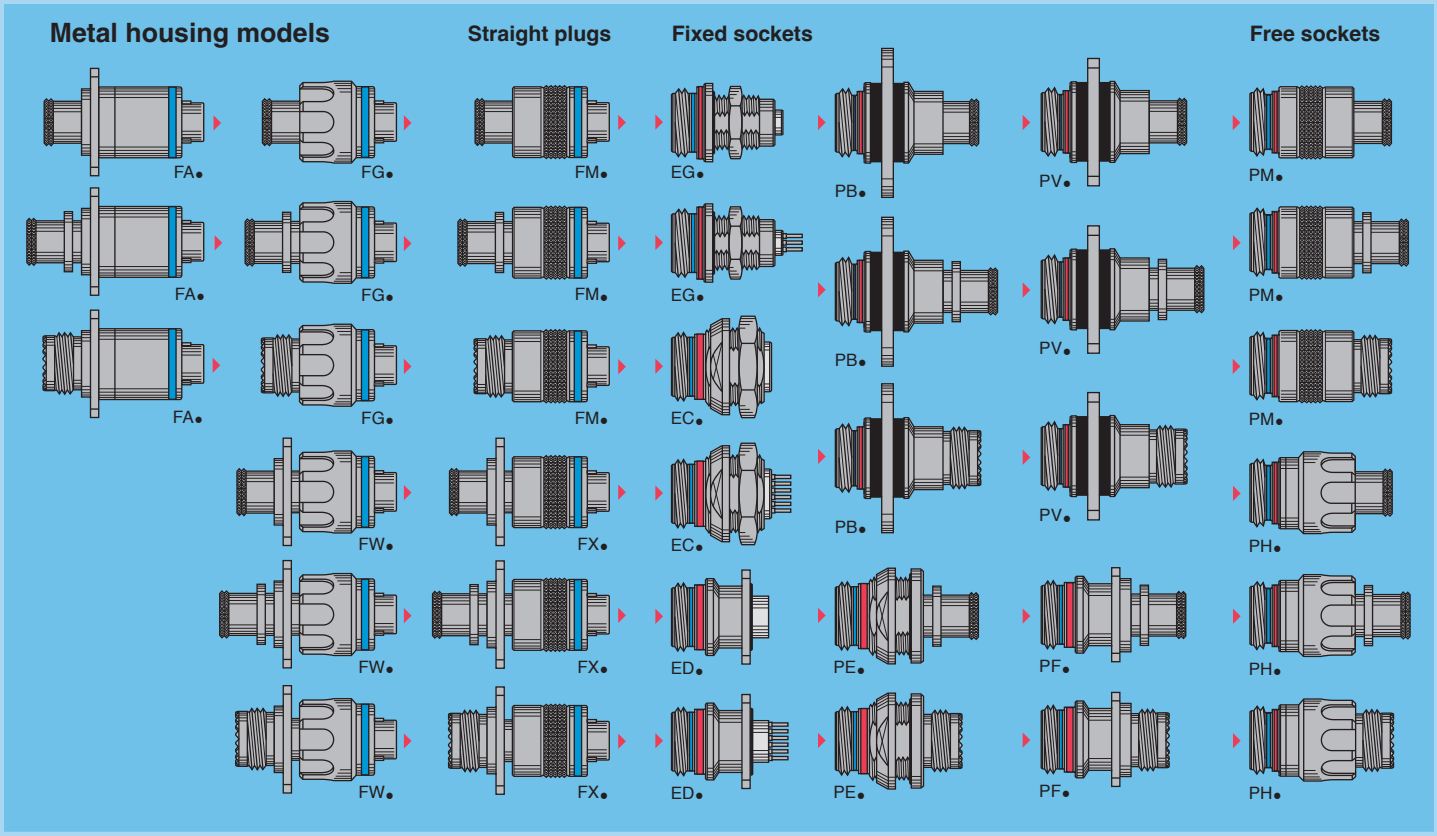

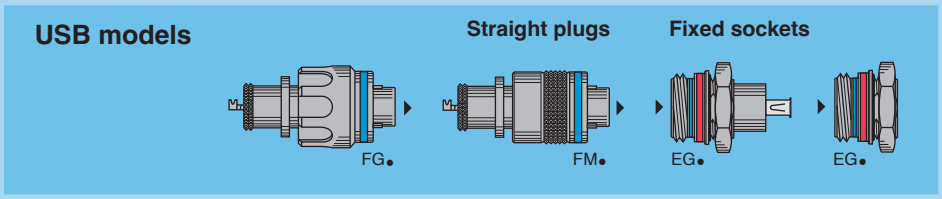

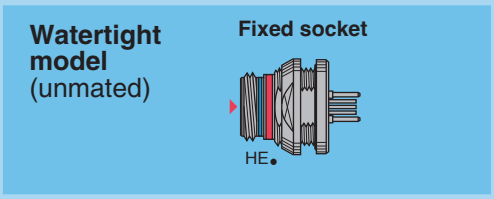

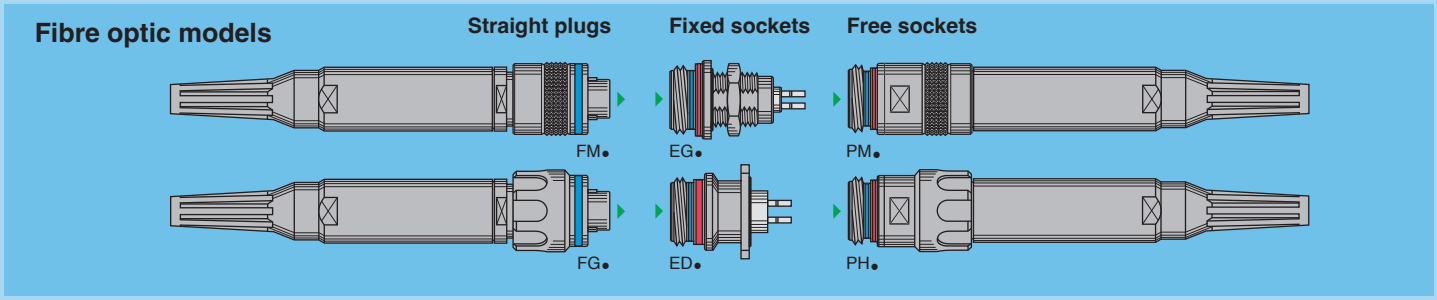

Part Numbering System

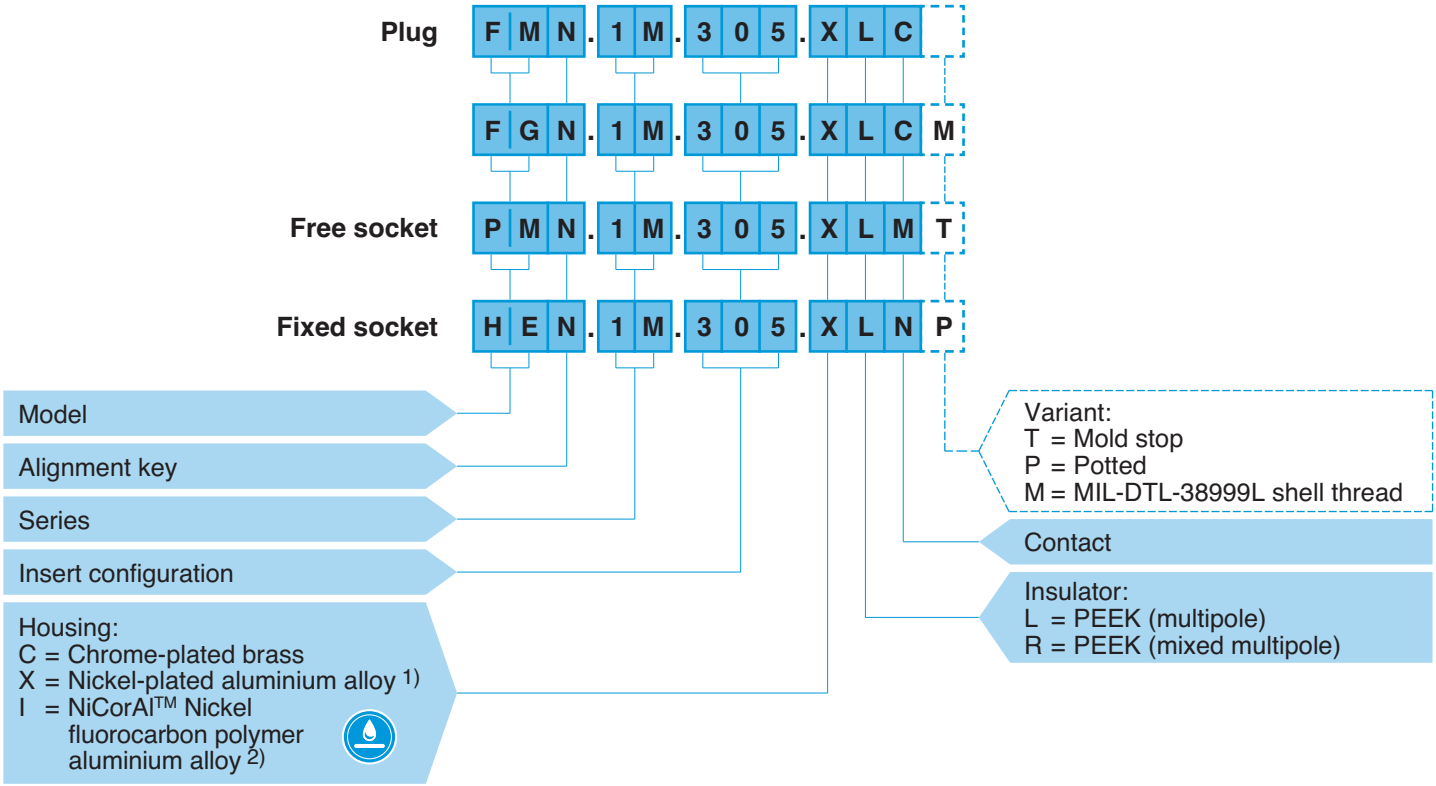

FMN.1M.305.XLC = straight plug with key (N), 1M series, multipole type with 5 contacts, outer shell in anthracite nickel-plated aluminium alloy, PEEK insulator, male crimp contacts

FGN.1M.305.XLCM = straight plug with key (N), arctic grip, 1M series, multipole type with 5 contacts, outer shell in anthracite nickel-plated aluminium alloy, PEEK insulator, male crimp contacts and with MIL-DTL-38999L thread for additional backshell (not supplied).

PMN.1M.305.XLMT = free socket with key (N), 1M series, multipole type with 5 contacts, outer shell in anthracite nickel-plated aluminium alloy, PEEK insulator, female crimp contacts and mold stop.

HEN.1M.305.XLNP = fixed socket, nut fixing, with key (N), 1M series, multipole type with 5 contacts, outer shell in anthracite nickel-plated aluminium alloy, PEEK insulator, female print contacts, watertight.

Note: 1) anthracite colour / 48 hours salt fog resistance. 2) anthracite colour / 500 hours salt fog resistance RoHS 2/REACH.

Part Section Showing Internal Components

Fixed socket

1. outer shell
2. o-ring
3. hexagonal nut
4. insulator
5. female contact
6. earthing crown

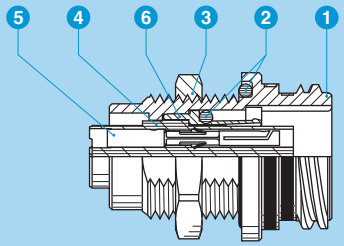

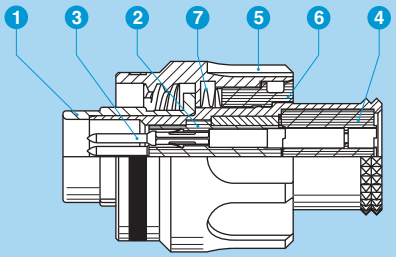

Straight plug

1. outer shell
2. insulator
3. male contact
4. rear seal
5. tightening screw
6. ratchet mechanism
7. spring

More informations on: https://www.lemo.com/catalog/ROW/UK_English/M_series.pdf

F Series

The F series connectors have been specially developed to meet the most demanding requirements in terms of dimensions, weight and watertightness. Our manufacturing programme includes now 8 series. This series provides customers with many features and benefits including:
– push-pull self-latching system for safe connection
– sealed to IP67 for environmental protection when mated according to IEC 60529
– compact scoop-proof design and use of aluminium alloy
– high shock and vibration resistance
– multipole types with 2 to 68 contacts or multifibre optic or hybrid FO + LV in 2F series
– crimp or print contacts (straight or elbow)
– keys ensuring ease of blind mating
– colour coded key options for system security.

The F series connectors are available in 3 different materials:
– for high shock and vibration resistance, LEMO recommends using Y code material (with beryllium copper latch sleeve).
– for environmental resistance and latching cycle endurance, LEMO recommends using the C code material (brass outershell).
– for lightweight and latching cycle endurance, LEMO recommends using X code material (aluminium shell).
– for lightweight and salt spray corrosion resistance, LEMO recommends using I code material (aluminium shell).

Each series includes several models of plugs and sockets available in contact configurations adapted to all round cables, including up to 68 conductors, and a maximum diameter of 34 mm. Since LEMO connectors are perfectly screened and designed to guarantee very low resistance to shell electrical continuity, they are particularly adapted to applications where electromagnetic compatibility (EMC) is important. A large number of accessories as well as tooling for cable assembly are available.

Metal housing models

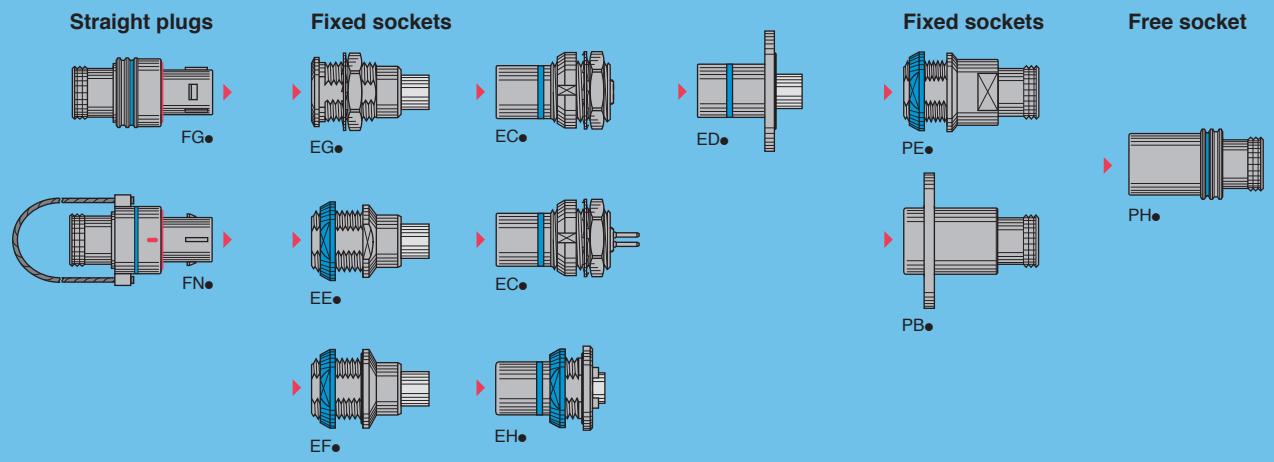

Models for fibre optic

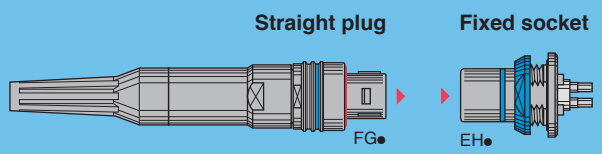

Watertight models

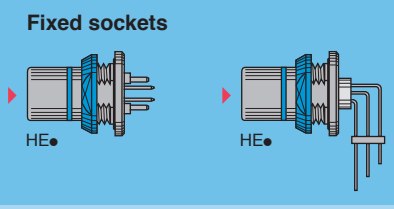

Part Numbering System

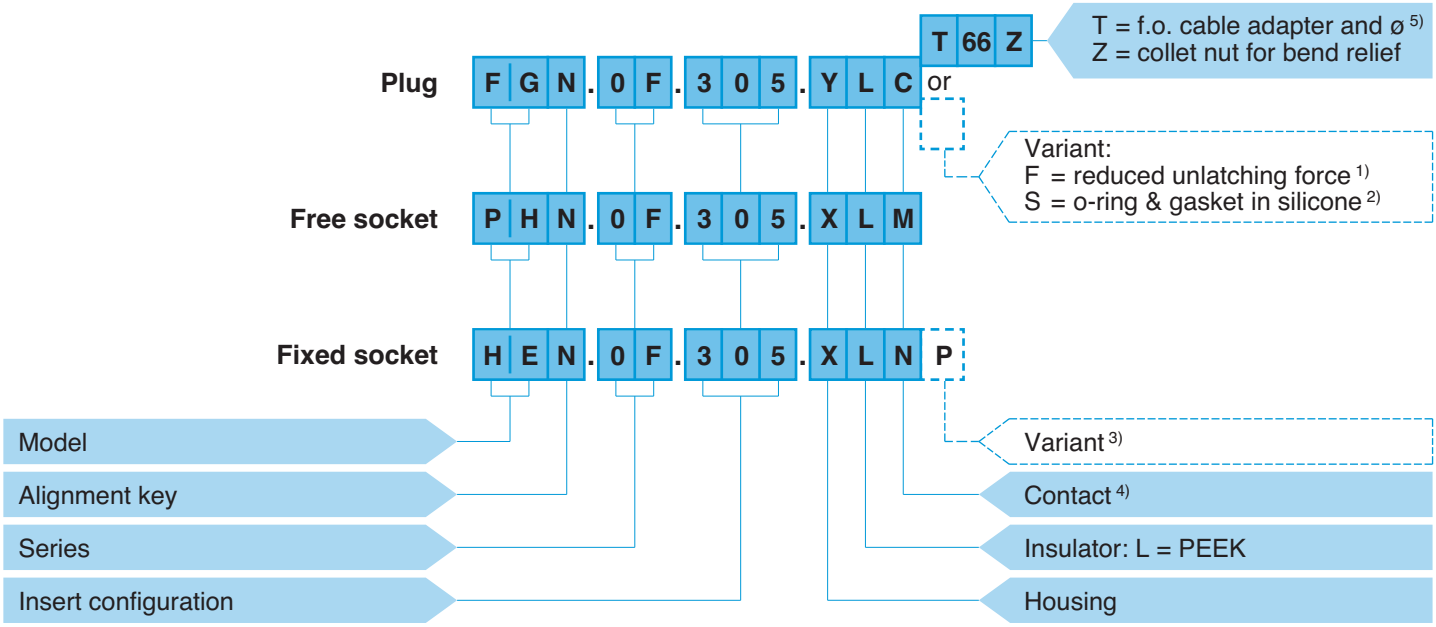

FGN.0F.305.YLC = straight plug with key (N), 0F series, multipole type with 5 contacts, outer shell in anthracite nickel-plated aluminium alloy, beryllium copper latch sleeve, PEEK insulator, male crimp contacts.

PHN.0F.305.XLM = free socket with key (N), 0F series, multipole type with 5 contacts, outer shell in anthracite nickel-plated aluminium alloy, PEEK insulator, female crimp contacts.

HEN.0F.305.XLNP = fixed socket, nut fixing, with key (N), 0F series, multipole type with 5 contacts, outer shell in anthracite nickel-plated aluminium alloy, PEEK insulator, female print contacts, watertight.

Note: 1) for straight plug only. 2) with shell material code X or Y. 3) potting for HE● only. 4) HE● available only with print contacts (straight or elbow).
5) **connectors for fibre-optic are delivered without the fibre optic contacts, they must be ordered separately.**

Part Section Showing Internal Components

Straight socket

1. outer shell
2. earthing crown
3. insulator
4. female contact
5. rear seal
6. front nut

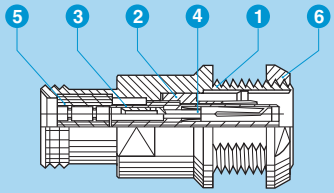

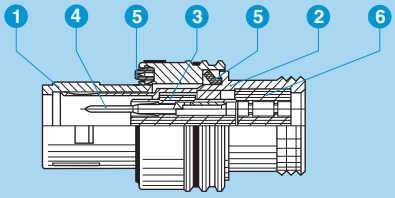

Straight plug

1. outer shell
2. latch sleeve
3. insulator
4. male contact
5. gasket
6. rear seal

More informations on: https://www.lemo.com/catalog/ROW/UK_English/f_series.pdf

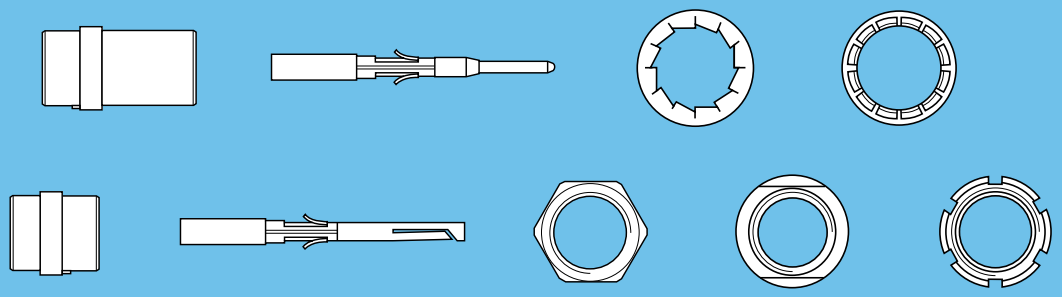

SPARE PARTS

Spare parts for crimp contacts

	Types	Insulator part number		ø (mm)		Fig.	Cond. AWG		Contact part number	
		Male contact	Female contact	A	C		min.	max.	Male	Female
00 TT	302/303/304	FGG.00.30●.YL	EGG.00.40●.YL	0.5	0.45	1	32	28	FGG.00.554.ZZC	EGG.00.654.ZZM
0B 0K 0T	302/303	FGG.0B.30●.YL	EGG.0B.40●.YL	0.9	1.10	1	24	20	FGG.0B.560.ZZC	EGG.0B.660.ZZM
					0.80	2	26	22	FGG.0B.561.ZZC	EGG.0B.661.ZZM
					0.45	2	32	28	FGG.0B.562.ZZC	EGG.0B.662.ZZM
	304/305	FGG.0B.30●.YL	EGG.0B.40●.YL	0.7	0.80	1	26	22	FGG.0B.555.ZZC	EGG.0B.655.ZZM
					0.45	2	32	28	FGG.0B.556.ZZC	EGG.0B.656.ZZM
	306/307/309	FGG.0B.30●.YL	–	0.5	0.45	1	32	28	FGG.0B.554.ZZC	–
0S	302	–	–	0.9	1.10	1	24	20	FGG.0B.560.ZZC	EGG.0B.660.ZZM
					0.80	2	26	22	FGG.0B.561.ZZC	EGG.0B.661.ZZM
					0.45	2	32	28	FGG.0B.562.ZZC	EGG.0B.662.ZZM
	303/304	–	–	0.7	0.80	1	26	22	FGG.0B.555.ZZC	EGG.0B.655.ZZM
					0.45	2	32	28	FGG.0B.556.ZZC	EGG.0B.656.ZZM
1B 1K 1T	302/303	FGG.1B.30●.YL	EGG.1B.40●.YL	1.3	1.40	1	20	18	FGG.1B.565.ZZC	EGG.1B.665.ZZM
					1.10	2	24	20	FGG.1B.566.ZZC	EGG.1B.666.ZZM
					0.80	2	26	22	FGG.1B.567.ZZC	EGG.1B.667.ZZM
	304/305	FGG.1B.30●.YL	EGG.1B.40●.YL	0.9	1.10	1	24	20	FGG.1B.560.ZZC	EGG.1B.660.ZZM
					0.80	2	26	22	FGG.1B.561.ZZC	EGG.1B.661.ZZM
					0.45	2	32	28	FGG.1B.562.ZZC	EGG.1B.662.ZZM
	306/307/308	FGG.1B.30●.YL	EGG.1B.40●.YL	0.7	0.80	1	26	22	FGG.1B.555.ZZC	EGG.1B.655.ZZM
					0.45	2	32	28	FGG.1B.556.ZZC	EGG.1B.656.ZZM
	310/314/316	FGG.1B.3●●.YL	–	0.5	0.45	1	32	28	FGG.1B.554.ZZC	–
1S	302	–	–	1.3	1.40	1	20	18	FGG.1B.565.ZZC	EGG.1B.665.ZZM
					1.10	2	24	20	FGG.1B.566.ZZC	EGG.1B.666.ZZM
					0.80	2	26	22	FGG.1B.567.ZZC	EGG.1B.667.ZZM
	304	–	–	0.9	1.10	1	24	20	FGG.1B.560.ZZC	EGG.1B.660.ZZM
					0.80	2	26	22	FGG.1B.561.ZZC	EGG.1B.661.ZZM
					0.45	2	32	28	FGG.1B.562.ZZC	EGG.1B.662.ZZM
2B 2K 2T	302	FGG.2B.302.YL	EGG.2B.402.YL	2.0	2.40	1	16	12	FGG.2B.575.ZZC	EGG.2B.675.ZZM
					1.90	2	18	14	FGG.2B.576.ZZC	EGG.2B.676.ZZM
	303	FGG.2B.303.YL	EGG.2B.403.YL	1.6	1.90	1	18	14	FGG.2B.570.ZZC	EGG.2B.670.ZZM
					1.40	2	22	18	FGG.2B.571.ZZC	EGG.2B.671.ZZM
	304/305 306/307	FGG.2B.30●.YL	EGG.2B.40●.YL	1.3	1.40	1	20	18	FGG.2B.565.ZZC	EGG.2B.665.ZZM
					1.10	2	24	20	FGG.2B.566.ZZC	EGG.2B.666.ZZM
					0.80	2	26	22	FGG.2B.567.ZZC	EGG.2B.667.ZZM
	308/310	FGG.2B.3●●.YL	EGG.2B.4●●.YL	0.9	1.10	1	24	20	FGG.2B.560.ZZC	EGG.2B.660.ZZM
					0.80	2	26	22	FGG.2B.561.ZZC	EGG.2B.661.ZZM
					0.45	2	32	28	FGG.2B.562.ZZC	EGG.2B.662.ZZM
	312/314/316 318/319	FGG.2B.3●●.YL	EGG.2B.4●●.YL	0.7	0.80	1	26	22	FGG.2B.555.ZZC	EGG.2B.655.ZZM
					0.45	2	32	28	FGG.2B.556.ZZC	EGG.2B.656.ZZM

Tools for crimp contacts

	Types	Positioners part number [1]		Extractors part number for male/ female contacts
		Male contact	Female contact	
00 TT	302/303/304	DCE.91.050.0VC	DCE.91.050.0VM	DCC.05.02B.LAG
0B 0K 0T	302/303	DCE.91.090.BVC	DCE.91.090.BVM	DCC.09.05B.LAG
		DCE.91.090.AVC	DCE.91.090.AVM	
	304/305	DCE.91.070.BVC	DCE.91.070.BVM	DCC.07.04B.LAG
	306/307/309	DCE.91.050.BVC	DCE.91.050.BVM	DCC.05.02B.LAG
0S	302	DCE.91.090.BVC	DCE.91.090.BVM	DCC.09.05B.LAG
		DCE.91.090.AVC	DCE.91.090.AVM	
	303/304	DCE.91.070.BVC	DCE.91.070.BVM	DCC.07.04B.LAG
1B 1K 1T	302/303	DCE.91.131.BVC	DCE.91.131.BVM	DCC.13.15B.LAG
	304/305	DCE.91.091.BVC	DCE.91.091.BVM	DCC.09.05B.LAG
	306/307/308	DCE.91.071.BVC	DCE.91.071.BVM	DCC.07.04B.LAG
	310/314/316	DCE.91.051.BVC	DCE.91.051.BVM	DCC.05.02B.LAG
1S	302	DCE.91.131.BVC	DCE.91.131.BVM	DCC.13.15B.LAG
	304	DCE.91.091.BVC	DCE.91.091.BVM	DCC.09.05B.LAG
2B 2K 2T	302	DCE.91.202.BVCM		DCC.20.25B.LAG
	303	DCE.91.162.BVCM		DCC.16.25B.LAG
	304/305 306/307	DCE.91.132.BVC	DCE.91.132.BVM	DCC.13.15B.LAG
		DCE.91.132.CVC	DCE.91.132.CVM	
	308/310	DCE.91.092.BVC	DCE.91.092.BVM	DCC.09.05B.LAG
		DCE.91.092.AVC	DCE.91.092.AVM	
	312/314/316 318/319	DCE.91.072.BVC	DCE.91.072.BVM	DCC.07.04B.LAG

Note: [1] please consult page 132 for the corresponding crimping tools.

FGG-EGG Crimp contacts

Fig. 1

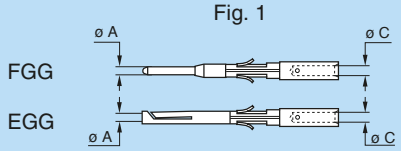

Fig. 2

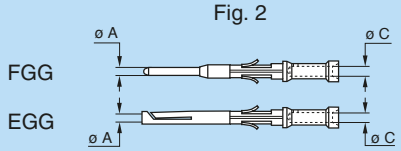

Note: a wide variation of strand number and diameter combinations are quoted as being AWG, some of which do not have a large enough cross section to guarantee a crimp as per either MIL-C-22520/1-01 or /7-01.

FGG-EGG Insulators

FGG

male

EGG

female

Note: each insulator can be used both for crimp contacts of normal shape (fig. 1) or with reduced crimp barrel (fig. 2).

DCE Positioners ø 0.5-0.7-0.9-1.3 mm [1]

male

female

These positioners are suitable for use with both manual and pneumatic crimping tools according to the MIL-C-22520/7-01 standard.

DCE Turret for ø 1.6-2.0-3.0-4.0 mm [1]

Note: these turrets can be used with manual crimping tool according to MIL-C-22520/1-01 standard.

DCC Manual extractors

Spare parts for crimp contacts

	Types	Insulator part number		ø (mm)		Fig.	Cond. AWG		Contact part number	
		Male contact	Female contact	A	C		min.	max.	Male	Female
2S	306	–	–	1.3	1.40	1	20	18	FGG.2B.565.ZZC	EGG.2B.665.ZZM
					1.10	2	24	20	FGG.2B.566.ZZC	EGG.2B.666.ZZM
					0.80	2	26	22	FGG.2B.567.ZZC	EGG.2B.667.ZZM
3B 3K 3T	302	FGG.3B.302.YL	EGG.3B.402.YL	3.0	3.20	1	14	10	FGG.3B.580.ZZC	EGG.3B.680.ZZM
	303/304/309	FGG.3B.30●.YL [1)]	EGG.3B.40●.YL [1)]	2.0	2.40	1	16	12	FGG.3B.575.ZZC	EGG.3B.675.ZZM
					1.90	2	18	14	FGG.3B.576.ZZC	EGG.3B.676.ZZM
	305/306/307	FGG.3B.30●.YL	EGG.3B.40●.YL	1.6	1.90	1	18	14	FGG.3B.570.ZZC	EGG.3B.670.ZZM
					1.40	2	22	18	FGG.3B.571.ZZC	EGG.3B.671.ZZM
	308/309/310	FGG.3B.3●●.YL [1)]	EGG.3B.4●●.YL [1)]	1.3	1.40	1	20	18	FGG.3B.565.ZZC	EGG.3B.665.ZZM
					1.10	2	24	20	FGG.3B.566.ZZC	EGG.3B.666.ZZM
					0.80	2	26	22	FGG.3B.567.ZZC	EGG.3B.667.ZZM
	312/314 316/318	FGG.3B.3●●.YL	EGG.3B.4●●.YL	0.9	1.10	1	24	20	FGG.3B.560.ZZC	EGG.3B.660.ZZM
					0.80	2	26	22	FGG.3B.561.ZZC	EGG.3B.661.ZZM
					0.45	2	32	28	FGG.3B.562.ZZC	EGG.3B.662.ZZM
	320/322/324 326/330/332	FGG.3B.3●●.YL	EGG.3B.4●●.YL	0.7	0.80	1	26	22	FGG.3B.555.ZZC	EGG.3B.655.ZZM
					0.45	2	32	28	FGG.3B.556.ZZC	EGG.3B.656.ZZM
4B 4K	304	FGG.4B.304.YL	EGG.4B.404.YL	3.0	3.20	1	14	10	FGG.4B.580.ZZC	EGG.4B.680.ZZM
	306/307	FGG.4B.30●.YL	EGG.4B.40●.YL	2.0	2.40	1	16	12	FGG.4B.575.ZZC	EGG.4B.675.ZZM
					1.90	2	18	14	FGG.4B.576.ZZC	EGG.4B.676.ZZM
	310	FGG.4B.310.YL	EGG.4B.410.YL	1.6	1.90	1	18	14	FGG.4B.570.ZZC	EGG.4B.670.ZZM
					1.40	2	22	18	FGG.4B.571.ZZC	EGG.4B.671.ZZM
	312	FGG.4B.312.YL	EGG.4B.412.YL	1.3	1.40	1	20	18	FGG.4B.565.ZZC	EGG.4B.665.ZZM
					1.10	2	24	20	FGG.4B.566.ZZC	EGG.4B.666.ZZM
	316/320 324/330	FGG.4B.3●●.YL	EGG.4B.4●●.YL	0.9	1.10	1	24	20	FGG.4B.560.ZZC	EGG.4B.660.ZZM
					0.80	2	26	22	FGG.4B.561.ZZC	EGG.4B.661.ZZM
	340/348	FGG.4B.3●●.YL	EGG.4B.4●●.YL	0.7	0.80	1	26	22	FGG.4B.555.ZZC	EGG.4B.655.ZZM
					0.45	2	32	28	FGG.4B.556.ZZC	EGG.4B.656.ZZM
5B 5K	304	FGG.5B.304.ML	EGG.5B.404.ML	4.0	4.00	1	12	10	FGG.5B.582.ZZC	EGG.5B.682.ZZM
	310	FGG.5B.310.YL	EGG.5B.410.YL	3.0	3.20	1	14	10	FGG.5B.580.ZZC	EGG.5B.680.ZZM
	314/316	FGG.5B.3●●.YL	EGG.5B.4●●.YL	2.0	2.40	1	16	12	FGG.5B.575.ZZC	EGG.5B.675.ZZM
					1.90	2	18	14	FGG.5B.576.ZZC	EGG.5B.676.ZZM
	320	FGG.5B.320.YL	EGG.5B.420.YL	1.6	1.90	1	18	14	FGG.5B.570.ZZC	EGG.5B.670.ZZM
					1.40	2	22	18	FGG.5B.571.ZZC	EGG.5B.671.ZZM
	330/340/348	FGG.5B.3●●.YL	EGG.5B.4●●.YL	1.3	1.40	1	20	18	FGG.5B.565.ZZC	EGG.5B.665.ZZM
					1.10	2	24	20	FGG.5B.566.ZZC	EGG.5B.666.ZZM
					0.80	2	26	22	FGG.5B.567.ZZC	EGG.5B.667.ZZM
	350/354/364	FGG.5B.3●●.YL	EGG.5B.4●●.YL	0.9	1.10	1	24	20	FGG.5B.560.ZZC	EGG.5B.660.ZZM
					0.80	2	26	22	FGG.5B.561.ZZC	EGG.5B.661.ZZM

Note:
[1)] for 309 type the insulator part number is FGG.3B.309.ML (male contact) and EGG.3B.409.ML (female contact).

Tools for crimp contacts

	Types	Positioners part number [1]		Extractors part number for male/ female contacts
		Male contact	Female contact	
2S	306	DCE.91.132.BVC	DCE.91.132.BVM	DCC.13.15B.LAG
		DCE.91.132.CVC	DCE.91.132.CVM	
3B 3K 3T	302	DCE.91.303.BVCM		DCC.30.35B.LAG
	303/304/309	DCE.91.203.BVCM		DCC.20.25B.LAG
	305/306/307	DCE.91.163.BVCM		DCC.16.25B.LAG
	308/309/310	DCE.91.133.BVC	DCE.91.133.BVM	DCC.13.15B.LAG
	312/314 316/318	DCE.91.093.BVC	DCE.91.093.BVM	DCC.09.05B.LAG
		DCE.91.093.BVG [2]	DCE.91.093.BVU [2]	
	320/322/324 326/330/332	DCE.91.073.BVC	DCE.91.073.BVM	DCC.07.04B.LAG
4B 4K	304	DCE.91.304.BVCM		DCC.30.35B.LAG
	306/307	DCE.91.204.BVCM		DCC.20.25B.LAG
	310	DCE.91.164.BVCM		DCC.16.25B.LAG
	312	DCE.91.134.BVC	DCE.91.134.BVM	DCC.13.15B.LAG
	316/320 324/330	DCE.91.094.BVC	DCE.91.094.BVM	DCC.09.05B.LAG
	340/348	DCE.91.074.BVC	DCE.91.074.BVM	DCC.07.04B.LAG
5B 5K	304	DCE.91.405.BVCM		DCC.40.45B.LAG
	310	DCE.91.305.BVCM		DCC.30.35B.LAG
	314/316	DCE.91.205.BVCM		DCC.20.25B.LAG
	320	DCE.91.165.BVCM		DCC.16.25B.LAG
	330/340/348	DCE.91.135.BVC	DCE.91.135.BVM	DCC.13.15B.LAG
		DCE.91.135.BVG	DCE.91.135.BVU	
	350/354/364	DCE.91.095.BVC	DCE.91.095.BVM	DCC.09.05B.LAG

Note:
[1] please consult page 132 for the corresponding crimping tools.
[2] «G» and «U» positioners for reduced crimp barrel (see p. 65 - fig. 2 for contact type details).

FGG-EGG Crimp contacts

Fig. 1

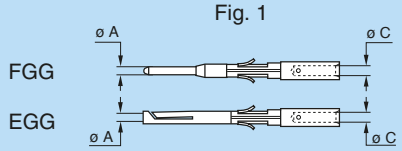

Fig. 2

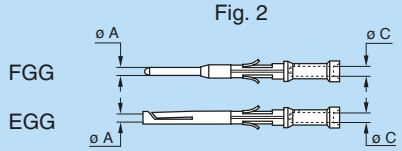

Note: a wide variation of strand number and diameter combinations are quoted as being AWG, some of which do not have a large enough cross section to guarantee a crimp as per either MIL-C-22520/1-01 or /7-01.

FGG-EGG Insulators

FGG

male

EGG

female

Note: each insulator can be used both for crimp contacts of normal shape (fig. 1) or with reduced crimp barrel (fig. 2).

DCE Positioners ø 0.5-0.7-0.9-1.3 mm [1]

male

female

These positioners are suitable for use with both manual and pneumatic crimping tools according to the MIL-C-22520/7-01 standard.

DCE Turret for ø 1.6-2.0-3.0-4.0 mm [1]

Note: these turrets can be used with manual crimping tool according to MIL-C-22520/1-01 standard.

DCC Manual extractors

Crimping tools for electrical contacts

Manual crimping tools

Fig. A

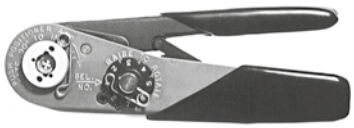

Fig. B

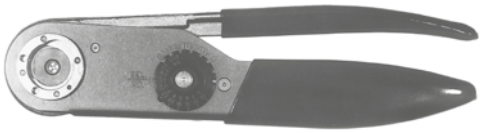

Part number			Supplier
contact ø 0.5-0.7 0.9-1.3 (Fig. A)	contact ø 1.6-2.0 (Fig. B)	contact ø 3.0-4.0 (Fig. B)	
DPC.91.701.V[1)]	**DPC.91.101.A**[2)]	**DPC.91.102.V**	LEMO
MH860[1)]	**AF8**[2)]	**M300BT**	DANIELS
616336[1)]	**615708**[2)]	**–**	ASTRO

[1)] According to specification MIL-C-22520/7-01.
[2)] According to specification MIL-C-22520/1-01.

Pneumatic crimping tools

Part number	Supplier
DPC.91.701.C	LEMO
85230	BALMAR
621101	BUCHANAN

According to specification MIL-C-22520/7-01.
For LEMO contacts ø 0.5-0.7-0.9-1.3 mm

Spare parts

GBA Locking washers

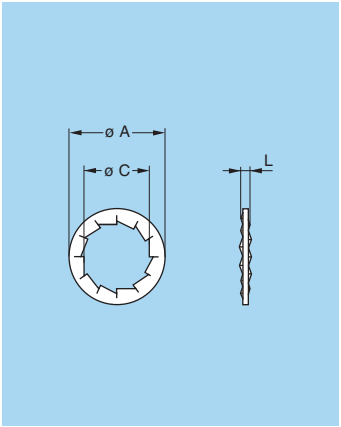

Part number	Series	Dimensions (mm)		
		A	C	L
GBA.00.250.FN	00-TT	9.5	7.1	1.0
GBA.0S.250.FN	0S-0B-0T	12.5	9.1	1.0
GBA.1S.250.FN	1S-1B-1T	16.0	12.1	1.0
GBA.0E.250.FN	XB	19.6	14.1	1.2
GBA.1E.250.FN	1E-1K	21.8	16.1	1.2
GBA.2S.250.FN	2S-2B-2T	19.5	15.1	1.2
GBA.3S.250.FN	3S-3B-3T	25.0	18.1	1.4
GBA.4S.250.FN	4S-4B	32.0	25.1	1.4

- Material: Nickel-plated bronze (3 μm)

Note: to order this accessory separately, use the above part numbers.

GBB Tapered washers

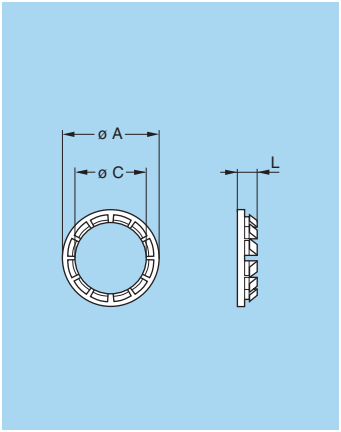

Part number	Series	Dimensions (mm)		
		A	C	L
GBB.00.250.LN	00	9	7.1	2.0
GBB.0S.250.LN	0S-0B	11	9.1	2.5
GBB.1S.250.LN	1S-1B	15	12.1	3.5
GBB.2S.250.LN	2S-2B	18	15.1	4.0
GBB.3S.250.LN	3S-3B	22	18.1	4.5
GBB.4S.250.LN	4S-4B	28	25.2	5.0
GBB.5S.250.LN	5S-5B	40	35.2	7.5

- Material: Nickel-plated brass (3 μm)

Note: sockets of series 5B and 5S are always supplied with a tapered washer. To order this accessory separately, use the above part numbers. The panel cut out diameters are larger when using tapered washer.

GEG Notched nut

Model 1

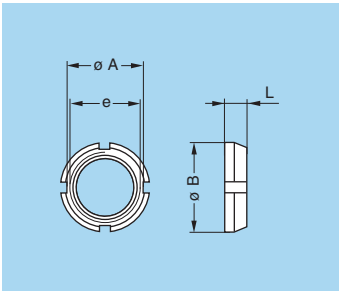

Model 2

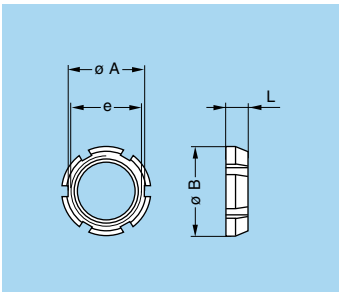

Part number	Model	Dimensions (mm)			
		A	B	e	L
GEG.00.240.LC	1	8.6	10	M7 x 0.5	2.5
GEG.0S.240.LC	1	10.5	12	M9 x 0.6	2.5
GEG.0E.240.LC	1	15.8	18	M14 x 1.0	3.5
GEG.1S.240.LC	1	14.0	16	M12 x 1.0	3.5
GEG.1E.240.LC	2	17.5	20	M16 x 1.0	3.5
GEG.1S.242.LC	1	12.1	14	M11 x 0.5	3.5
GEG.2S.240.LC	2	17.5	20	M15 x 1.0	3.5
GEG.2S.241.LC	2	20.5	24	M19 x 1.0	3.5
GEG.2E.240.LC	2	22.5	25	M20 x 1.0	3.5

- Material: Chrome-plated brass (Ni 3 μm + Cr 0.3 μm)

Note: 00, TT, 0B, 0T, 0S, 1B, 1T, 1S, 2B, 2T and 2S series fixed and free sockets for back panel mounting are always delivered with this notched nut. To order this accessory separately, use the above part numbers.

GEA Hexagonal nuts

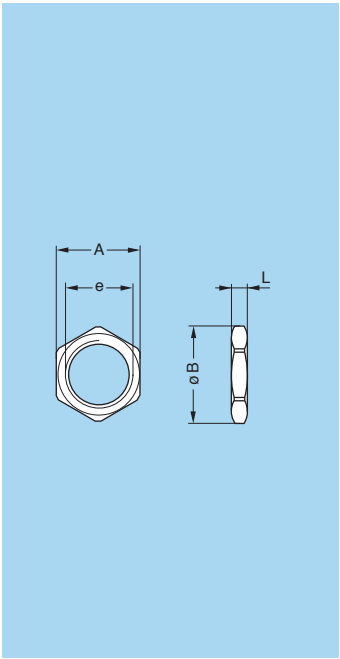

Part number	Series	Dimensions (mm)			
		A	B	e	L
GEA.00.240.LN	00-TT	9	10.2	M7 x 0.50	2.0
GEA.0S.240.LN	0S-0B-0T	11	12.4	M9 x 0.60	2.0
GEA.0S.241.LN	0S-0B	12	13.8	M10 x 0.75	2.5
GEA.0E.240.LN	0E-0K 1S-1B-XB	17	19.2	M14 x 1.00	2.5
GEA.1S.240.LN	1S-1B-1T	14	15.8	M12 x 1.00	2.5
GEA.1S.241.LN	1B	13	14.8	M11 x 0.50	2.5
GEA.1E.240.LN	1E-1K 2S-2B	19	21.5	M16 x 1.00	3.0
GEA.2S.240.LN	2S-2B-2T	17	19.2	M15 x 1.00	2.7
GEA.2E.240.LN	2E-2K	24	27.0	M20 x 1.00	4.0
GEA.3S.240.LN	3S-3B-3T	22	25.0	M18 x 1.00	3.0
GEA.3E.240.LN	3E-3K	30	34.0	M24 x 1.00	5.0
GEA.4S.240.LN	4S-4B	30	34.0	M25 x 1.00	5.0
GEA.4E.240.LN	4E-4K	36	40.5	M30 x 1.00	7.0

- Material: Nickel-plated brass (3 μm), natural anodized aluminium alloy, stainless steel

Note: to order this part separately, use the above part numbers. The last letters «LN» of the part number refer to the nut material and treatment. If a nut in aluminium alloy or stainless steel is desired, replace the last letters of the part number by «PT» or «AZ» respectively.

GEC Conical nuts

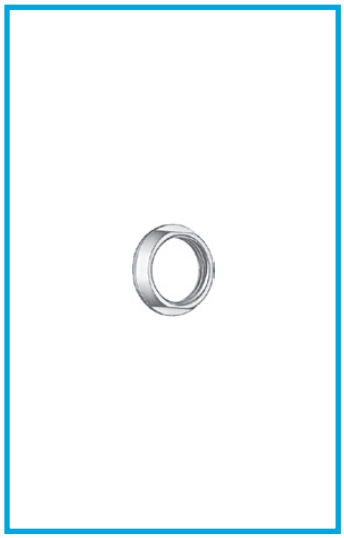

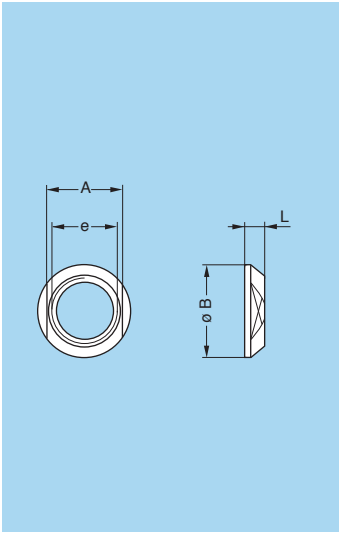

Part number	Dimensions (mm)			
	A	B	e	L
GEC.00.240.LC	8	10.0	M7 x 0.5	2.5
GEC.0S.240.LC	10	12.0	M9 x 0.6	2.5
GEC.0E.240.LC	16	18.0	M14 x 1.0	3.0
GEC.1S.240.LC	13	16.0	M12 x 1.0	3.2
GEC.1S.241.LC	17	20.0	M16 x 1.0	4.0
GEC.1S.242.LC	12	14.0	M11 x 0.5	3.2
GEC.2S.240.LC	17	20.0	M15 x 1.0	3.8
GEC.2S.241.LC	20	24.0	M19 x 1.0	5.8
GEC.2E.240.LC	22	25.0	M20 x 1.0	5.0
GEC.3S.240.LC	20	24.0	M18 x 1.0	4.5
GEC.3E.240.LC	27	30.0	M24 x 1.0	4.5
GEC.4S.240.LC	27	30.0	M25 x 1.0	4.5
GEC.4K.241.LC	32	35.5	M30 x 1.0	5.0
GEC.5S.240.LC	37	41.0	M35 x 1.0	5.0

- Material: Chrome-plated brass (Ni 3 μm + Cr 0.3 μm)

Note: 3B, 3K, 3T, 3S, 3E, 4B, 4K, 4S, 4E, 5B, 5K, 5S, 5E, 6S and 6E series fixed and free sockets for back panel mounting are always delivered with a conical nut. To order this accessory separately, use the part numbers in the adjacent table.

GEB Round nuts

Model 1

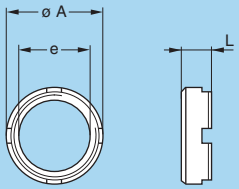

Model 2

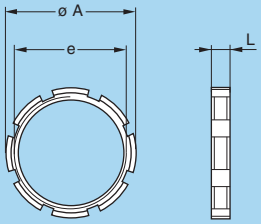

Part number	Model	Dimensions (mm)		
		A	e	L
GEB.00.240.LN	1	9.0	M7 x 0.50	4.0
GEB.0S.240.LN	1	11.0	M9 x 0.60	4.0
GEB.0E.240.LN	1	18.0	M14 x 1.00	5.0
GEB.1S.240.LN	1	14.0	M12 x 1.00	5.0
GEB.1E.240.LN	1	20.0	M16 x 1.00	5.0
GEB.2S.240.LN	1	18.0	M15 x 1.00	5.5
GEB.2B.240.LN	1	17.5	M15 x 0.75	2.5
GEB.3S.240.LN	1	22.0	M18 x 1.00	5.5
GEB.4S.240.LN	1	28.0	M25 x 1.00	6.0
GEB.5S.240.LN	2	40.0	M35 x 1.00	8.0
GEB.5E.240.LN	2	54.0	M45 x 1.50	8.0
GEB.6S.241.LN	2	54.0	M48 x 1.50	8.0
GEB.6E.240.LN	2	65.0	M55 x 2.00	9.0

- Material: Nickel-plated brass (3 μm)

Note: 5B, 5K, 5S, 5E, 6S and 6E series sockets are always supplied with model 2 round nuts. To order this accessory separately, use the part numbers in the adjacent table.

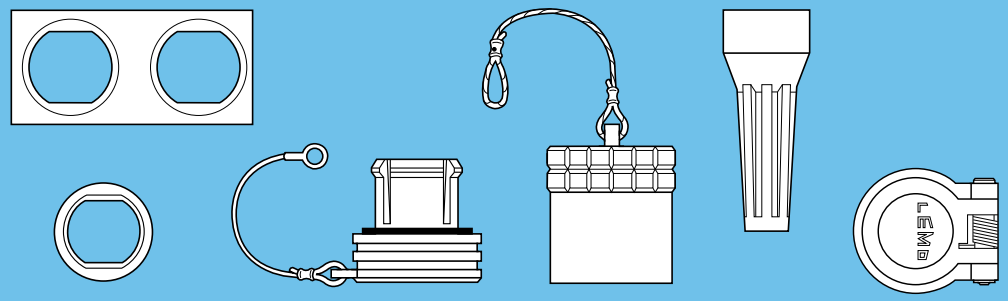

ACCESSORIES

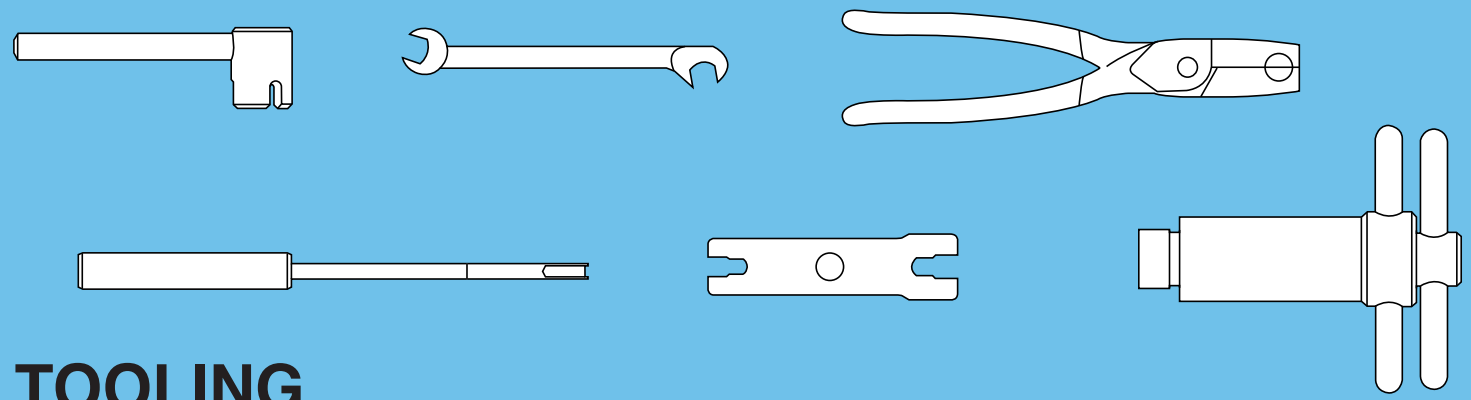

TOOLING

Accessories

BFG Plug caps

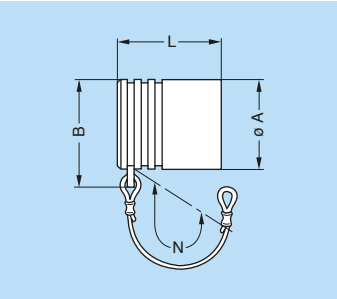

Part number	Series	Dimensions (mm)			
		A	B	L	N[1)]
BFG.00.100.PCSG	00	7.5	9.8	10.0	60
BFG.0B.100.PCZG	0S-0B	9.5	12.5	11.2	85
BFG.1B.100.PCZG	1S-1B	12.0	15.5	12.3	85
BFG.2B.100.PCSG	2S-2B	15.0	18.0	15.0	85
BFG.3B.100.PCSG	3S-3B	18.5	22.0	18.5	95

- Body material: Polyoxymethylene (POM) grey (or black)
- Cord material: Polypropylene core and PVC coat, grey (or black)
- Gasket material: Silicone rubber
- Maximum operating temperature: 100°C
- Watertightness: IP51 according to IEC 60529

Note: 1) the tolerance on this dimension is ± 5 mm.
This cap is available only with an alignment key (G). Upon request this cap can be supplied in black and the last letter «G» of the part number should be replaced with «N».

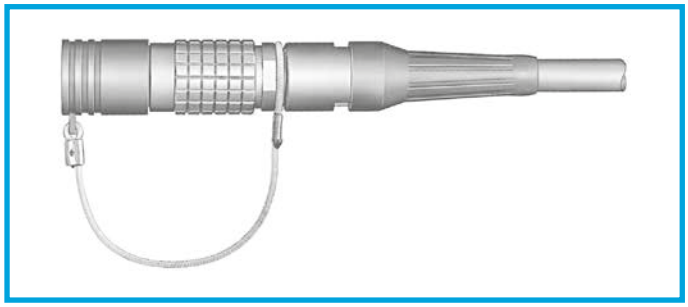

Fitting the cord

Slide the plug into the loop of the cord.
Place the loop into the groove in front of the collet nut and tighten the loop.

BFA Plug caps

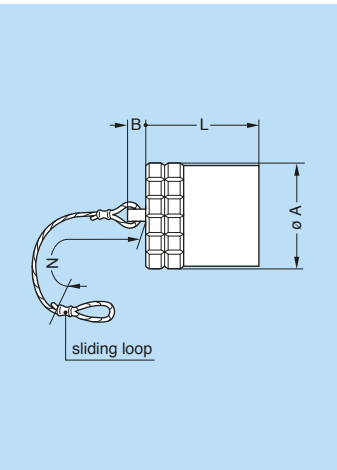

Part number	Series	Dimensions (mm)			
		A	B	L	N[1)]
BFA.0E.100.NAS	0E	14.0	6	12.5	85
BFA.1E.100.NAS	1E	16.0	6	15.5	85
BFA.2E.100.NAS	2E	19.5	6	17.5	85
BFA.3E.100.NAS	3E	23.0	6	22.0	120
BFA.4E.100.NAS	4E	29.0	10	22.5	120
BFA.4S.100.NAS	4S	25.0	10	22.2	120
BFA.5E.100.NAS	5E	44.0	10	27.0	150
BFA.5S.100.NAS	5S	36.0	10	30.2	150
BFA.6S.100.NAS	6S	46.0	10	33.0	150

- Body material: Nickel-plated brass (Ni 3µm)
- Lanyard material: Stainless steel
- Crimp ferrule material: Nickel-plated brass + polyolefin
- O-ring material: Silicone rubber or FPM
- Operating temperature: -50°/135°C (Silicone rubber & Polyolefine)
- Watertightness: IP68 according to IEC 60529 for E series

Note: 1) the tolerance on this dimension is ± 5 mm.
The last letter «S» of the part number stands for the material of the O-ring (silicone rubber). O-ring's made from FPM are also available; if required, replace the letter «S» by «V».

BFG Plug caps with key (G)

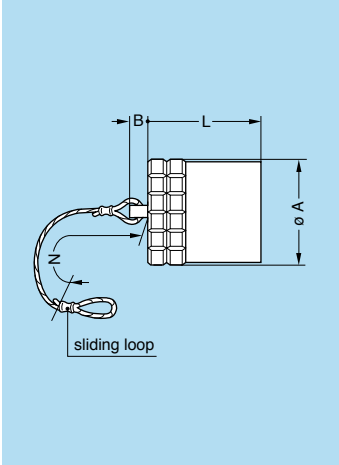

Part number	Series	Dimensions (mm)			
		A	B	L	N[1)]
BFG.0K.100.NAS	0K	14.0	6	12.5	85
BFG.1K.100.NAS	1K	16.0	6	15.5	85
BFG.2K.100.NAS	2K	19.5	6	17.5	85
BFG.3K.100.NAS	3K	23.0	6	22.0	120
BFG.4B.100.NAS	4B	25.0	10	20.2	120
BFG.4K.100.NAS	4K	29.0	10	22.5	120
BFG.5B.100.NAS	5B	36.0	10	27.2	150
BFG.5K.100.NAS	5K	44.0	10	27.0	150
BFG.6E.100.NAS	6E	54.0	10	31.0	150

- Body material: Nickel-plated brass (Ni 3µm)
- Lanyard material: Stainless steel
- Crimp ferrule material: Nickel-plated brass + polyolefin
- O-ring material: Silicone rubber or FPM
- Operating temperature: -50°/135°C (Silicone rubber & Polyolefine)
- Watertightness: IP68 according to IEC 60529 for E and K series

Note: 1) the tolerance on this dimension is ± 5 mm.
This cap is available only with an alignment key (G). The last letter «S» of the part number stands for the material of the O-ring (silicone rubber). O-ring's made from FPM are also available; if required, replace the letter «S» by «V».

BHG Plug caps, nut fixing or flange

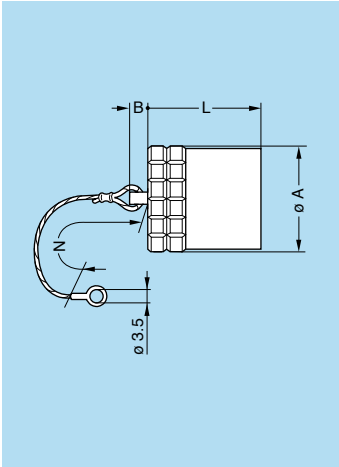

Part number	Series	Dimensions (mm)			
		A	B	L	N[1)]
BHG.0K.100.NAS	0K	14.0	6	12.5	85
BHG.1K.100.NAS	1K	16.0	6	15.5	85
BHG.2K.100.NAS	2K	19.5	6	17.5	85
BHG.3K.100.NAS	3K	23.0	6	22.0	120
BHG.4B.100.NAS	4B	25.0	10	20.2	120
BHG.4K.100.NAS	4K	29.0	10	22.5	120
BHG.5B.100.NAS	5B	36.0	10	27.2	150
BHG.5K.100.NAS	5K	44.0	10	27.0	150
BHG.6E.100.NAS	6E	54.0	10	31.0	150

- Body material: Nickel-plated brass (Ni 3µm)
- Lanyard material: Stainless steel
- Crimp ferrule material: Nickel-plated brass + polyolefin
- O-ring material: Silicone rubber or FPM
- Operating temperature: -50°/135°C (Silicone rubber & Polyolefine)
- Watertightness: IP68 according to IEC 60529 for E and K series

Note: 1) the tolerance on this dimension is ± 5 mm.
This cap is available only with an alignment key (G). The last letter «S» of the part number stands for the material of the O-ring (silicone rubber). O-ring's made from FPM are also available; if required, replace the letter «S» by «V».

BFG Plug cap

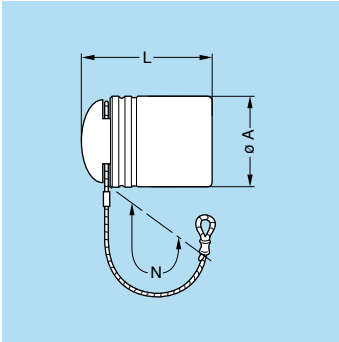

Part number	Series	Dimensions (mm)		
		A	L	N[1)]
BFG.3K.100.EAN	3K	26	31	155

- Material: black ALCRYN®
- Lanyard material: Stainless steel
- Crimp ferrule material: Stainless steel AISI 304 + polyolefin

Note: 1) the tolerance on this dimension is ± 5 mm.
These caps are suitable for use with any alignment key configuration.

BHA Plug cap

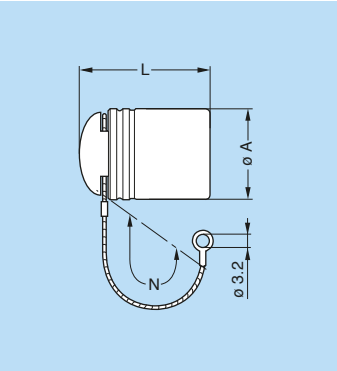

Part number	Series	Dimensions (mm)		
		A	L	N[1)]
BHA.3K.100.EAN	3K	26	31	120

- Material: black ALCRYN®
- Lanyard material: Stainless steel
- Crimp ferrule material: Stainless steel AISI 304 + polyolefin

Note: 1) the tolerance on this dimension is ± 5 mm.
These caps are suitable for use with any alignment key configuration.

BRA Blanking caps for fixed sockets and free straight sockets

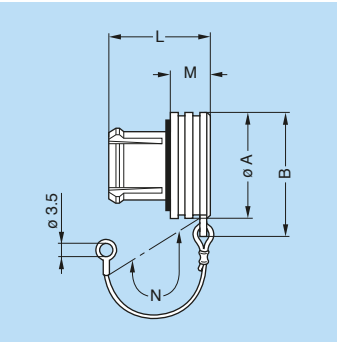

Part number	Series	Dimensions (mm)				
		A	B	L	M	N[1)]
BRA.00.200.PCSG	00	7.5	9.8	9.0	3.5	60
BRA.0B.200.PCSG	0S-0B	10.0	12.5	11.0	4.8	60
BRA.1B.200.PCSG	1S-1B	14.0	17.0	13.5	5.6	60
BRA.2B.200.PCSG	2S-2B	18.0	21.0	14.5	6.0	60
BRA.3B.200.PCSG	3S-3B	22.0	25.5	17.0	7.0	60

- Body material: Polyoxymethylene (POM) grey (or black)
- Cord material: Polypropylene core and PVC coat, grey (or black)
- Gasket material: Silicone rubber
- Maximum operating temperature: 100°C
- Watertightness: IP61 according to IEC 60529

Note: 1) the tolerance on this dimension is ± 5 mm.
These caps are suitable for use with any alignment key configuration. On request this cap can be supplied in black. If so, replace the last letter «G» of the part number by «N».

BRE Blanking caps for fixed sockets

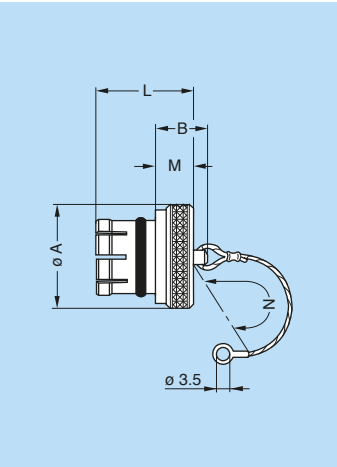

Part number	Series	Dimensions (mm)				
		A	B	L	M	N[1)]
BRE.00.200.NAS	00	8	7.5	8.8	3.5	60
BRE.0S.200.NAS	0S-0B	10	9.5	10.5	4.5	85
BRE.1S.200.NAS	1S-1B	14	11.0	12.5	5.0	85
BRE.2S.200.NAS	2S-2B	18	12.0	14.0	6.0	85
BRE.3S.200.NAS	3S-3B	22	14.0	18.0	8.0	120
BRE.4S.200.NAS	4S-4B	28	20.0	23.0	10.0	120
BRE.5S.200.NAS	5S-5B	40	22.0	30.0	12.0	150
BRE.6S.200.NAS	6S	54	22.0	30.0	12.0	150
BRE.6E.200.NAS	6E	57	24.0	31.5	14.0	150

- Body material: Nickel-plated brass (Ni 3 µm)
- Lanyard material: Stainless steel
- Crimp ferrule material: Nickel-plated brass + polyolefin
- O-ring material: Silicone rubber or FPM
- Operating temperature: -50°/135°C (Silicone rubber & Polyolefine)
- Watertightness: IP61 according to IEC 60529 for S series

Note: 1) the tolerance on this dimension is ± 5 mm.
These caps are suitable for use with any alignment key configuration. The last letter «S» of the part number stands for the O-ring material (silicone rubber). O-ring's made from FPM are also available; if required, replace the letter «S» by «V».

BRE Blanking caps for fixed sockets

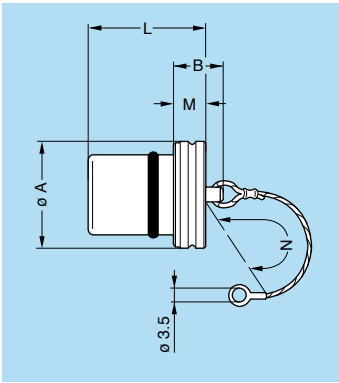

Part number	Series	Dimensions (mm)				
		A	B	L	M	N[1)]
BRE.0K.200.NAS	0K-0E	15.0	10	15.0	4	85
BRE.1K.200.NAS	1K-1E	17.0	12	20.0	6	85
BRE.2K.200.NAS	2K-2E	20.5	14	24.0	8	85
BRE.3K.200.NAS	3K-3E	24.0	14	28.0	8	120
BRE.4K.200.NAS	4K-4E	30.0	20	30.5	10	120
BRE.5K.200.NAS	5K-5E	44.0	22	37.0	12	150

- Body material: Nickel-plated brass (Ni 3 µm)
- Lanyard material: Stainless steel
- Crimp ferrule material: Nickel-plated brass + polyolefin
- O-ring material: Silicone rubber or FPM
- Operating temperature: -50°/135°C (Silicone rubber & Polyolefine)
- Watertightness: IP68 according to IEC 60529

Note: 1) the tolerance on this dimension is ± 5 mm.
These caps are suitable for use with any alignment key configuration. The last letter «S» of the part number stands for the O-ring material (silicone rubber). O-ring's made from FPM are also available; if required, replace the letter «S» by «V».

BRA Blanking caps for fixed sockets

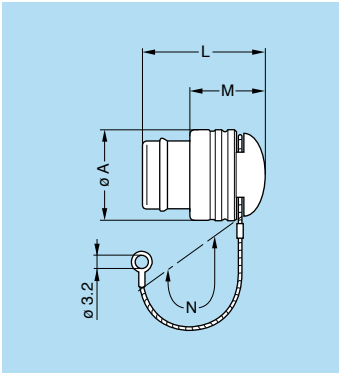

Part number	Series	Dimensions (mm)			
		A	L	M	N[1)]
BRA.3K.200.EAN	3K	26	27	14.5	120
BRA.4K.200.EAN	4K	31	31	17.0	120

- Material: black ALCRYN®
- Lanyard material: Stainless steel
- Crimp ferrule material: Stainless steel AISI 304 + polyolefin

Note: 1) the tolerance on this dimension is ± 5 mm.
These caps are suitable for use with any alignment key configuration.

BRF Blanking caps for free sockets

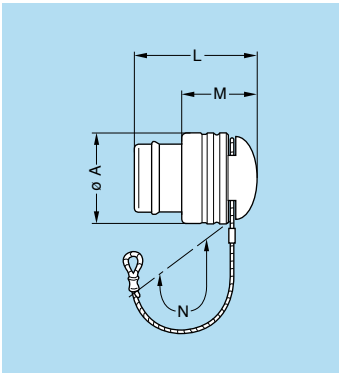

Part number	Series	Dimensions (mm)			
		A	L	M	N[1)]
BRF.3K.200.EAN	3K	26	27	14.5	155

- Material: black ALCRYN®
- Lanyard material: Stainless steel
- Crimp ferrule material: Stainless steel AISI 304 + polyolefin

Note: 1) the tolerance on this dimension is ± 5 mm.
These caps are suitable for use with any alignment key configuration.

BRD Blanking caps for free sockets

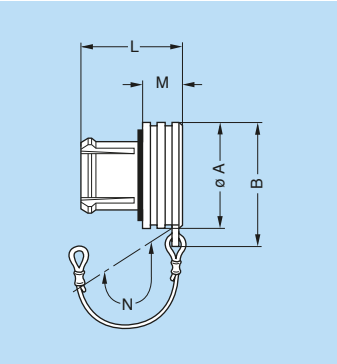

Part number	Series	Dimensions (mm)				
		A	B	L	M	N[1)]
BRD.00.200.PCSG	00	7.5	9.8	9.0	3.5	85
BRD.0B.200.PCSG	0S-0B	10.0	12.5	11.0	4.8	85
BRD.1B.200.PCSG	1S-1B	14.0	17.0	13.5	5.6	85
BRD.2B.200.PCSG	2S-2B	18.0	21.0	14.5	6.0	85
BRD.3B.200.PCSG	3S-3B	22.0	25.5	17.0	7.0	95

- Body material: Polyoxymethylene (POM) grey (or black)
- Cord material: Polypropylene core and PVC coat, grey (or black)
- Gasket material: Silicone rubber
- Maximum operating temperature: 100°C
- Watertightness: IP61 according to IEC 60529

Note: 1) the tolerance on this dimension is ± 5 mm.
On request this cap is available in black. If required, replace the last letter «G» of the part number by «N».

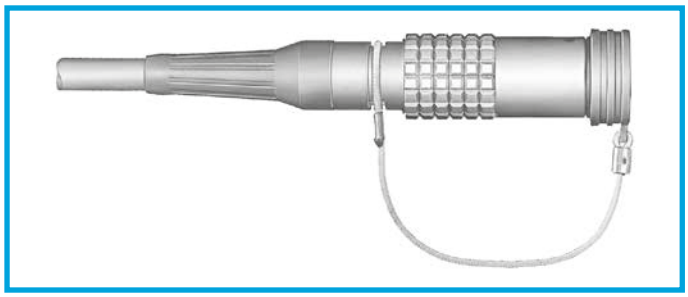

Fitting the cord

Slide the socket into the loop of the cord.
Place the loop into the groove in front of the collet nut.
Tighten the loop.

BRF Blanking caps for free sockets

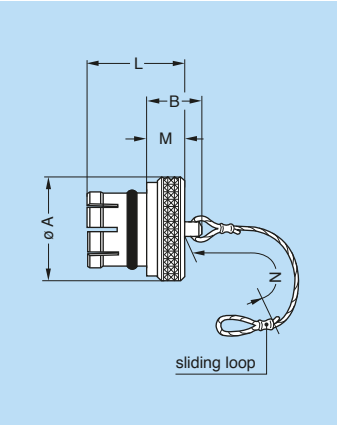

Part number	Series	Dimensions (mm)				
		A	B	L	M	N[1)]
BRF.00.200.NAS	00	8	7.5	8.8	3.5	85
BRF.0S.200.NAS	0S-0B	10	9.5	10.5	4.5	85
BRF.1S.200.NAS	1S-1B	14	11.0	12.5	5.0	85
BRF.2S.200.NAS	2S-2B	18	12.0	14.0	6.0	85
BRF.3S.200.NAS	3S-3B	22	14.0	18.0	8.0	120
BRF.4S.200.NAS	4S-4B	28	20.0	23.0	10.0	120
BRF.5S.200.NAS	5S-5B	40	22.0	30.0	12.0	150
BRF.6S.200.NAS	6S	54	22.0	30.0	12.0	150

- Body material: Nickel-plated brass (Ni 3 µm)
- Lanyard material: Stainless steel
- Crimp ferrule material: Nickel-plated brass + polyolefin
- O-ring material: Silicone rubber or FPM
- Operating temperature: -50°/135°C (Silicone rubber & Polyolefine)
- Watertightness: IP61 according to IEC 60529 for S series

Note: 1) the tolerance on this dimension is ± 5 mm.
These caps are suitable for use with any alignment key configuration. The last letter «S» of the part number stands for the O-ring material (silicone rubber). O-ring's made from FPM are also available; if required, replace the letter «S» by «V».

BRF Blanking caps for free sockets

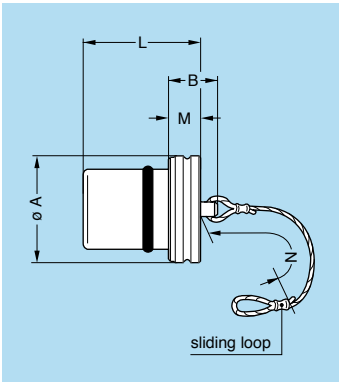

Part number	Series	Dimensions (mm)				
		A	B	L	M	N[1)]
BRF.0K.200.NAS	0K-0E	15.0	10	15.0	4	85
BRF.1K.200.NAS	1K-1E	17.0	12	20.0	6	85
BRF.2K.200.NAS	2K-2E	20.5	14	24.0	8	85
BRF.3K.200.NAS	3K-3E	24.0	14	28.0	8	120
BRF.4K.200.NAS	4K-4E	30.0	20	30.5	10	120
BRF.5K.200.NAS	5K-5E	44.0	22	37.0	12	150

- Body material: Nickel-plated brass (Ni 3 µm)
- Lanyard material: Stainless steel
- Crimp ferrule material: Nickel-plated brass + polyolefin
- O-ring material: Silicone rubber or FPM
- Operating temperature: -50°/135°C (Silicone rubber & Polyolefine)
- Watertightness: IP68 according to IEC 60529

Note: 1) the tolerance on this dimension is ± 5 mm.
These caps are suitable for use with any alignment key configuration. The last letter «S» of the part number stands for the O-ring material (silicone rubber). O-ring's made from FPM are also available; if required, replace the letter «S» by «V».

BRR Spring loaded dust caps for ERA, ERN and EG● sockets or PSA and PK● fixed sockets

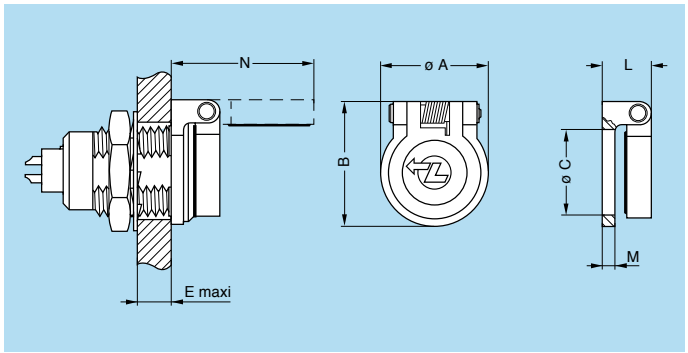

Part number	Series	Dimensions (mm)						
		A	B	C	E	L	M	N
BRR.0S.200.PZVG	0S-0B	11.0	13.3	9.0	5.8	5.0	1.2	15.3
BRR.1S.200.PZVG	1S-1B	14.2	17.1	12.0	6.0	6.3	1.5	20.3
BRR.2S.200.PZVG	2S-2B	18.6	22.4	15.2	6.5	8.2	2.0	26.2
BRR.3S.200.PZVG	3S-3B	22.5	26.5	18.2	9.0	8.8	2.5	30.8

Note: On request, this cap is available in black, blue or white. If so replace the last letter «G» of the part number by «N», «A» or «B».

- Body material: PSU
- Gasket material: FKM
- Spring material: Stainless steel
- Axes material: Nickel-plated brass
- Maximum operating temperature: 100°C
- Watertightness: IP61 according to IEC 60529

BRR Spring loaded dust cap for ED● and EB● fixed sockets

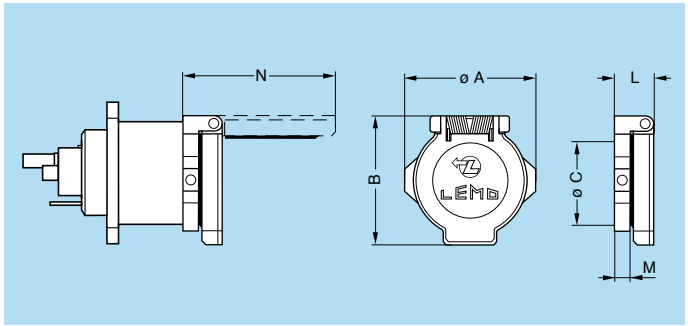

Part number	Series	Dimensions (mm)					
		A	B	C	L	M	N
BRR.3K.200.PZSG	3K	29	29	23	8.1	3	33.2

Note: Use Allen key (0.9 mm flat) to secure cap on connector.

- Cap material: Polyoxymethylene (POM) grey
- Body material: Nickel-plated brass
- Gasket material: Silicone rubber
- Spring material: Stainless steel
- Axes material: Nickel-plated brass
- Maximum operating temperature: 100°C
- Watertightness: IP61 according to IEC 60529

BFG Blanking caps for plugs (T series)

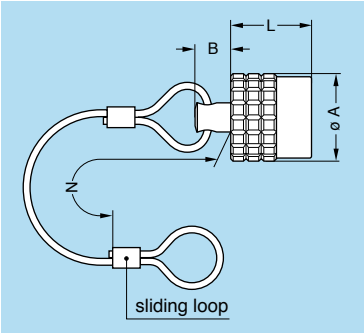

Part number	Dimensions (mm)				Part number
	A	B	L	N[1)]	
BFG.TT.100.CAS	7.0	4.3	9.0	60	**BHG.TT.100.CAS**
BFG.0T.100.CAS	9.5	5.0	11.0	85	**BHG.0T.100.CAS**
BFG.1T.100.CAS	12.0	6.3	12.4	85	**BHG.1T.100.CAS**
BFG.2T.100.CAS	15.0	6.4	13.8	85	**BHG.2T.100.CAS**
BFG.3T.100.CAS	18.8	6.4	17.6	120	**BHG.3T.100.CAS**

BHG Blanking caps for fixed plugs (T series)

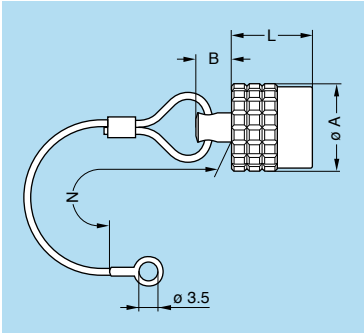

- Body material: Chrome-plated brass (Ni 3 µm)
- Lanyard material: Stainless steel
- Crimp ferrule material: Nickel-plated brass + polyolefin
- O-ring material: Silicone
- Operating temperature: -50°/135°C (Silicone rubber & Polyolefine)
- Watertightness: IP68 according to IEC 60529

Note: 1) the tolerance on this dimension is ± 5 mm.

BRF Blanking caps for free sockets (T series)

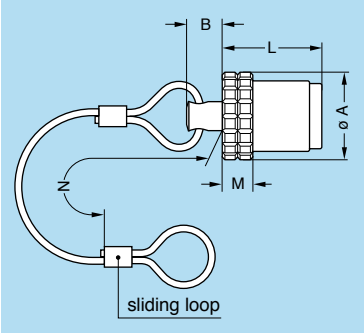

Part number	Dimensions (mm)					Part number
	A	B	L	M	N[1)]	
BRF.TT.200.CAZ	7.0	4.3	10.4	2.4	60	**BRE.TT.200.CAZ**
BRF.0T.200.CAZ	9.5	5.0	13.2	3.2	85	**BRE.0T.200.CAZ**
BRF.1T.200.CAZ	12.0	6.3	15.1	4.2	85	**BRE.1T.200.CAZ**
BRF.2T.200.CAZ	15.0	6.4	17.1	5.2	85	**BRE.2T.200.CAZ**
BRF.3T.200.CAZ	18.8	6.4	21.2	6.4	120	**BRE.3T.200.CAZ**

BRE Blanking caps for sockets (T series)

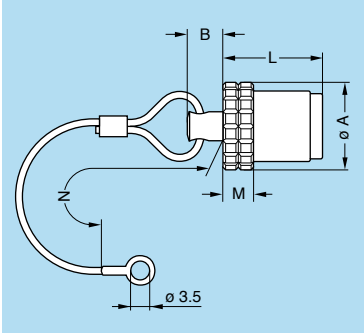

- Body material: Chrome-plated brass (Ni 3 µm)
- Lanyard material: Stainless steel
- Crimp ferrule material: Nickel-plated brass + polyolefin
- Operating temperature: -50°/135°C (Silicone rubber & Polyolefine)
- Watertightness: IP68 according to IEC 60529

Note: 1) the tolerance on this dimension is ± 5 mm.

GM● Bend relief (TPU)

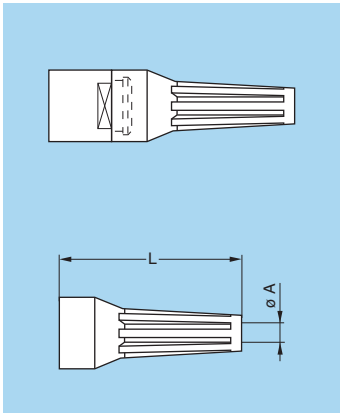

A bend relief made from thermoplastic polyurethane elastomer can be fitted over LEMO plugs and sockets that are supplied with nut for fitting such bend relief.
They are available in nine different colours match with the GRA insulating washers (see page 149).
Use the part numbers shown below to order this accessory separately.

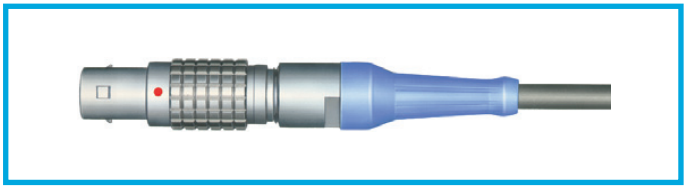

Main characteristics

- Material: TPU (Thermoplastic Polyurethane)
- Temperature range in dry atmosphere: -40°C +80°C

Part number	Series	Bend relief		Cable ø	
		A	L	min.	max.
GMA.00.012.DG [1]	00-TT	1.2	22	1.1	1.4
GMA.00.018.DG [1]		1.8	22	1.8	2.1
GMB.00.025.DG [1]		2.5	22	2.5	2.8
GMB.00.028.DG [1]		2.8	22	2.8	3.1
GMB.00.032.DG [1]		3.2	22	3.2	3.5
GMD.00.025.DG [1]		2.5	22	2.5	2.8
GMD.00.028.DG [1]		2.8	22	2.8	3.1
GMD.00.032.DG [1]		3.2	22	3.2	3.5
GMA.0B.025.DG	0B 0S 0E-0K-0T	2.5	24	2.5	2.9
GMA.0B.030.DG		3.0	24	3.0	3.4
GMA.0B.035.DG		3.5	24	3.5	3.9
GMA.0B.040.DG [1]		4.0	24	4.0	4.4
GMA.0B.045.DG [1]		4.5	24	4.5	5.2
GMA.1B.025.DG	1B-XB 1S 1E-1K-1T	2.5	30	2.5	2.9
GMA.1B.030.DG		3.0	30	3.0	3.4
GMA.1B.035.DG		3.5	30	3.5	3.9
GMA.1B.040.DG		4.0	30	4.0	4.4
GMA.1B.045.DG		4.5	30	4.5	4.9
GMA.1B.054.DG		5.4	30	5.4	6.0
GMA.1B.065.DG [1]		6.5	30	6.5	7.0

Part number	Series	Bend relief		Cable ø	
		A	L	min.	max.
GMA.2B.040.DG	2B 2S 2E-2K-2T	4.0	36	4.0	4.5
GMA.2B.045.DG		4.5	36	4.5	5.0
GMA.2B.050.DG		5.0	36	5.0	5.5
GMA.2B.060.DG		6.0	36	6.0	6.5
GMA.2B.070.DG		7.0	36	7.0	7.7
GMA.2B.080.DG [1]		7.8	36	7.8	8.8
GMA.3B.050.DG [1]	3S 3B 3E-3K-3T 4S	4.5	42	4.5	5.2
GMA.3B.060.DG		6.0	42	6.0	6.9
GMA.3B.070.DG		7.0	42	7.0	7.9
GMA.3B.080.DG		8.0	42	8.0	8.9
GMA.3B.090.DG		9.0	42	9.0	10.0
GMA.4B.080.DG [1]	4S 4B 4E-4K 5E-5K	8.0	60	8.0	9.0
GMA.4B.010.DG [1]		10.0	60	10.0	10.9
GMA.4B.011.DG [1]		11.0	60	11.0	11.9
GMA.4B.012.DG [1]		12.0	60	12.0	13.0
GMA.4B.013.DG [1]		13.5	60	13.5	14.5

Note: all dimensions are in millimetres.

Note: [1] Design may differ from other bend relief, model without stripes. The «GMD» are thin bend reliefs (for very flexible cables).
The last letter «G» of the part number indicates the grey colour of the bend relief. For ordering a bend relief with another colour, see table on page 146 and replace the letter «G» by the letter of the required colour. See also detailed information for each series: B series on page 71; K series on page 71; T series on page 71; S series on page 121; E series on page 121.

GMA Bend relief (Silicone)

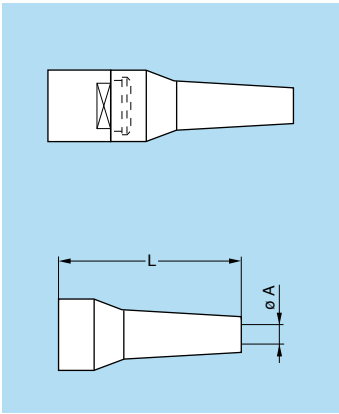

A bend relief has been designed for connectors used in applications at high temperature or requiring vapour sterilization.
These bend reliefs are different from previous ones as for their material, a silicone elastomer which is noted for its retention of flexibility over a wide temperature range. They are available in nine colours.
Use the part numbers shown below to order this accessory separately.

Main characteristics

- Material: Silicone elastomer VMQ
- Temperature range in dry atmosphere: -60°C +200°C
- Temperature range in water steam: +140°C

Part number	Series	Bend relief		Cable ø	
		A	L	min.	max.
GMA.0B.018.RG	0B 0S 0E-0K-0T	1.7	27	1.7	2.4
GMA.0B.025.RG		2.5	27	2.5	2.9
GMA.0B.030.RG		3.0	27	3.0	3.4
GMA.0B.035.RG		3.5	27	3.5	3.9
GMA.0B.040.RG		4.0	27	4.0	4.4
GMA.0B.045.RG		4.5	27	4.5	5.2
GMA.1B.025.RG	1B 1S 1E-1K-1T	2.5	34	2.5	2.9
GMA.1B.030.RG		3.0	34	3.0	3.4
GMA.1B.035.RG		3.5	34	3.5	3.9
GMA.1B.040.RG		4.0	34	4.0	4.4
GMA.1B.045.RG		4.5	34	4.5	5.0
GMA.1B.051.RG		5.1	34	5.1	5.6
GMA.1B.057.RG		5.7	34	5.7	6.2
GMA.1B.063.RG		6.3	34	6.3	7.0

Part number	Series	Bend relief		Cable ø	
		A	L	min.	max.
GMA.2B.040.RG	2B 2S 2E-2K-2T	4.0	41	4.0	4.4
GMA.2B.045.RG		4.5	41	4.5	5.0
GMA.2B.051.RG		5.1	41	5.1	5.6
GMA.2B.057.RG		5.7	41	5.7	6.2
GMA.2B.063.RG		6.3	41	6.3	7.0
GMA.2B.071.RG		7.1	41	7.1	7.9
GMA.2B.080.RG		8.0	41	8.0	9.0

Note: The last letter «G» of the part number indicates the grey colour of the bend relief. For ordering a bend relief with another colour, see table on page 146 and replace the letter «G» by the letter of the required colour. See also detailed information for each series: B series on page 71; K series on page 71; T series on page 71; S series on page 121; E series on page 121.

Note: the selection of pigments, which should remain stable at high temperature, is limited by the new regulations. For this reason, some colours will be a shade different from those used for Thermoplastic Polyurethane (TPU) bend reliefs. The selected solutions represent the best possible compromise.

Ref.	Colour	Ref.	Colour	Ref.	Colour
A	blue	**J**	yellow	**R**	red
B	white	**M**	brown	**S**	orange
G	grey	**N**	black	**V**	green

GM● Overall bend relief for plugs and sockets

Overall bend reliefs, type GMF for plugs and GMP for sockets offer optimum protection against mechanical damage and give a protection index of IP65 according to IEC 60529 (mated position). These bend reliefs slide easily over the connector shell and are positioned by slightly pressing the bend relief backnut.
The special design of the bend relief for plug provides for easy use of the push-pull self-latching system.

GMF Bend relief for straight plug

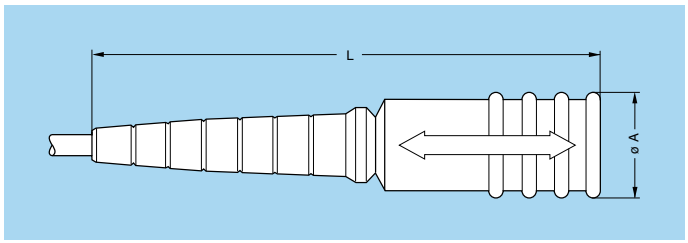

Part number	Series	Bend relief		Cable ø	
		A	L	min.	max.
GMF.0B.035.060EN	0S-0B	11.0	60.5	1.0	3.5
GMF.1B.062.072EN	1S-1B	16.0	72.0	2.5	6.2
GMF.2B.082.095EN	2S-2B	22.0	95.0	5.0	8.2

- Material: Elastomer rubber black colour
- Operating temperature: -30°C to +120°C

GMP Bend relief for free socket

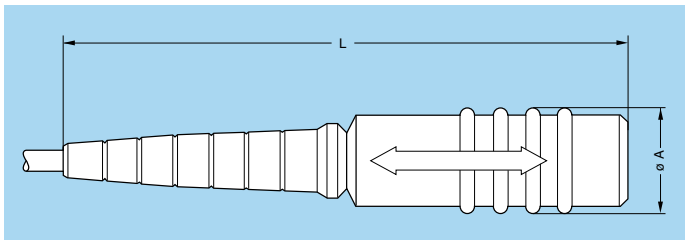

Part number	Series	Bend relief		Cable ø	
		A	L	min.	max.
GMP.0B.035.069EN	0S-0B	11.0	69.0	1.0	3.5
GMP.1B.062.079EN	1S-1B	16.0	80.0	2.5	6.2
GMP.2B.082.102EN	2S-2B	21.0	102.5	5.0	8.2

- Material: Elastomer rubber black colour
- Operating temperature: -30°C to +120°C

– The overall bend relief shall be installed over plug or free socket fitted with a nut for bend relief.
– The typical applications are shown below.
– The overall bend relief can be cut at different length depending on cable diameter.

Plug-free socket

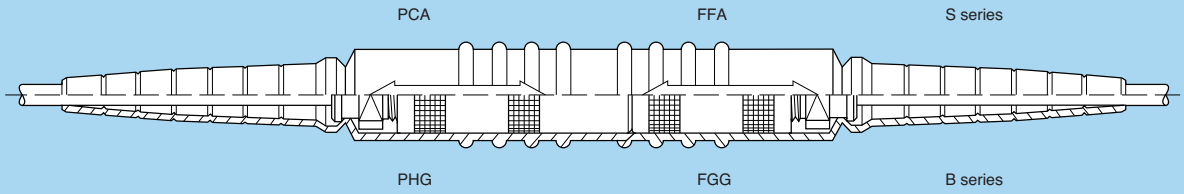

Plug-fixed socket

Optimum protection is offered only when using front panel mounting fixed sockets

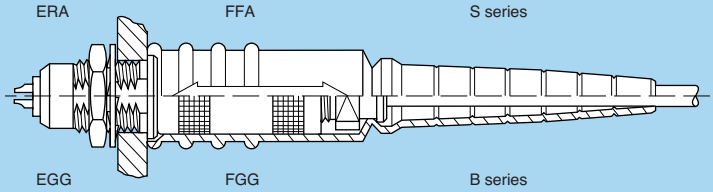

GMF Bend relief with cap for plug

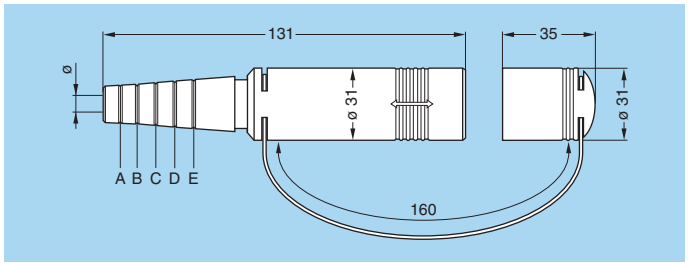

Part number	Series	For models	Cut	admissible ø (mm)	
				min.	max.
GMF.4K.080.EANZ	4E	FFA	–	8.0	8.9
			A	9.0	9.9
			B	10.0	11.4
	4K	FGG	C	11.5	12.9
			D	13.0	14.9
			E	15.0	16.5

● Material: Black EPDM

GMP Bend relief with cap for free socket

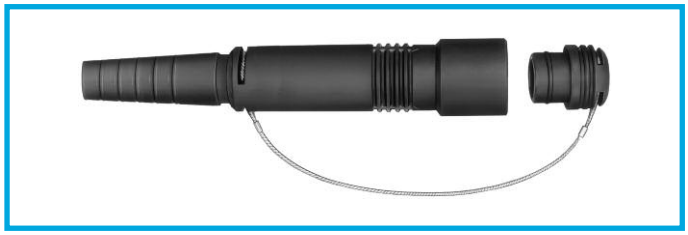

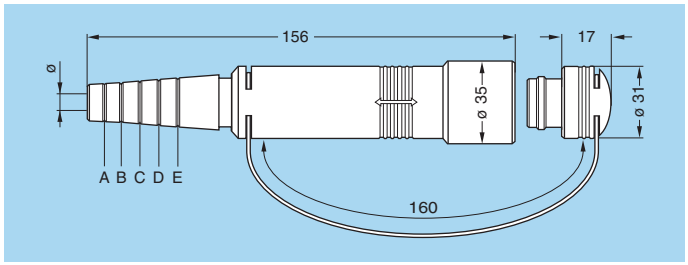

Part number	Series	For models	Cut	admissible ø (mm)	
				min.	max.
GMP.4K.080.EANZ	4E	PCA	–	8.0	8.9
			A	9.0	9.9
			B	10.0	11.4
	4K	PHG	C	11.5	12.9
			D	13.0	14.9
			E	15.0	16.5

● Material: Black EPDM

GSC Lead-through with cable collet

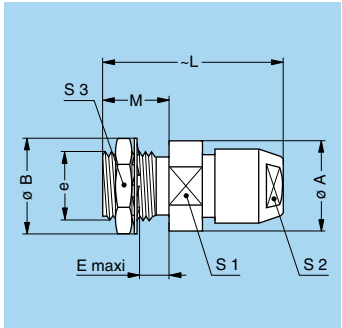

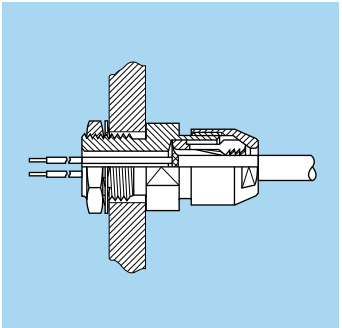

Part number	Dimensions (mm)								
	A	B	e	E	L	M	S1	S2	S3
GSC.00.290.CD••	6.5	8.1	M5x0.5	1.5	16	4.0	5	6	7
GSC.1S.290.ND••	12.0	12.5	M9x0.6	5.0	26	7.5	11	9	11
GSC.3S.290.ND••	17.0	19.5	M15x1.0	8.1	30	12.0	–	14	17

Note: •• = collet cable diameter of the B series. For cable diameter refer to page 67. Other surface treatment available.
The cable collet system stands for both screened and unscreened cables. It can be delivered with a nut for fitting a bend relief it you add a «Z» at the end of the part number.

GCA Earthing washer

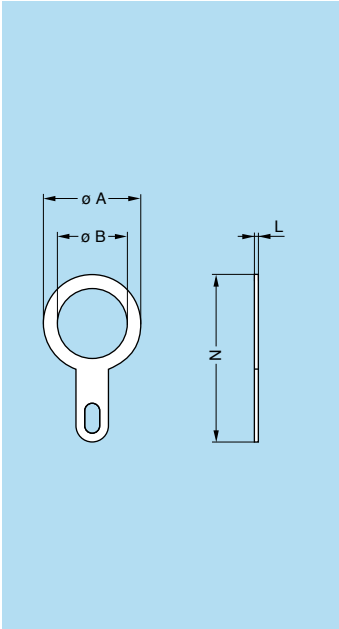

Part number	Series	Dimensions (mm)			
		A	B	L	N
GCA.00.255.LT	00-TT	9.5	7.1	0.4	18.2
GCA.0S.255.LT	0S-0B-0T	13.0	9.1	0.4	22.0
GCA.0E.255.LT	0E-0K	17.0	14.1	0.5	27.5
GCA.1S.255.LT	1S-1B-1T	17.0	12.2	0.5	27.5
GCA.1E.255.LT	1E-1K	20.0	16.2	0.5	32.0
GCA.2S.255.LT	2S-2B-2T	20.0	15.2	0.5	32.0
GCA.2E.255.LT	2E-2K	25.0	20.2	0.5	39.0
GCA.3S.255.LT	3S-3B-3T	25.0	18.2	0.5	39.0
GCA.3E.255.LT	3E-3K	31.0	24.0	0.5	43.0
GCA.4S.255.LT	4S-4B	35.0	25.6	0.6	50.0
GCA.4E.255.LT	4E-4K	35.0	30.6	0.6	50.0
GCA.5S.255.LT	5S-5B	42.0	35.1	0.3	57.5

- Material: CuSnZn plated brass (2 µm)

GRA Insulating washers

Sockets or plugs mounted on panels can be fitted with insulating washers. The nine colours available combined with those for the bend reliefs makes colour coding possible.

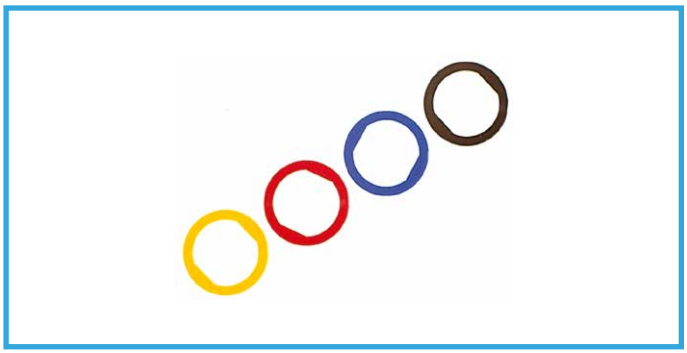

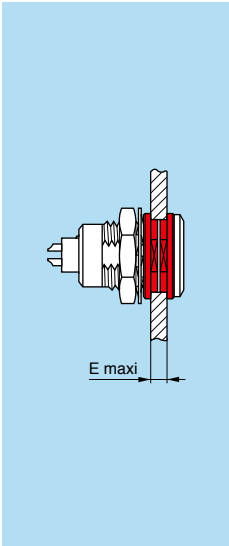

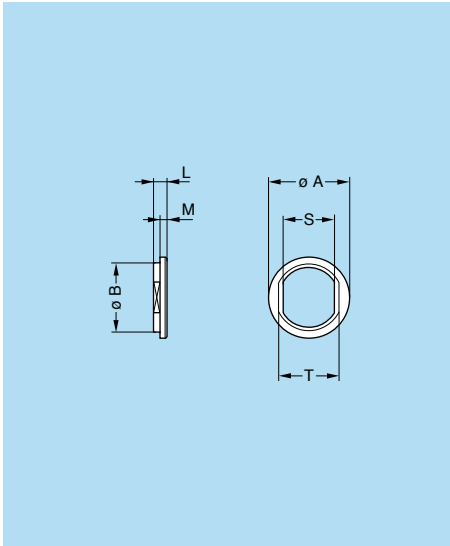

Part number	Series	Dimensions (mm)						
		A	B	E	L	M	S	T
GRA.00.269.GG	00	10.0	8.8	4.5	1.8	1.0	6.4	8.0
GRA.0S.269.GG	0S-0B	12.0	10.8	6.0	1.8	1.0	8.3	9.9
GRA.1S.269.GG	1S-1B	16.0	13.8	6.5	1.8	1.0	10.6	12.2
GRA.2S.269.GG	2S-2B	21.1	17.9	7.3	2.3	1.3	13.6	16.2
GRA.3S.269.GG	3S-3B	25.0	21.8	10.3	2.2	1.2	16.7	20.2
GRA.4S.269.GG	4S-4B	31.9	28.7	10.5	2.5	1.5	23.6	27.1

Note: insulating washers for series 5B are available on request.

Caution: these insulating washers can be used with fixed and free sockets with across flat dimension S1 equivalent to the S dimension of the washer.

- Material: Polyamide
- Maximum operating temperature: 90° C

Ref.	Colour	Ref.	Colour	Ref.	Colour
A	blue	**J**	yellow	**R**	red
B	white	**M**	brown	**S**	orange
G	grey	**N**	black	**V**	green

Note: the last letter «G» of the part number indicates the colour grey for the insulating washer. To obtain an insulating washer of another colour, refer to the table above and change the letter «G» of the part number to the corresponding letter of the colour required. For the panel cut-out, please consult chapter «Panel cut-out» on page 158.

GRC Double panel washers

Double panel washers have been designed to make the drilling of panel holes easier for mounting fixed and free sockets. The combination of the nine different colours of the double panel washers and of the bend reliefs makes colour coding possible.

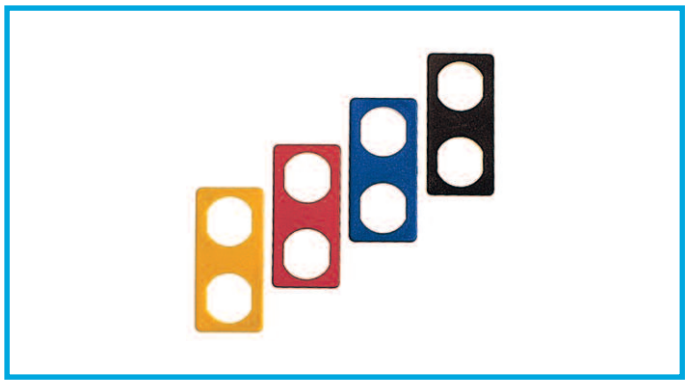

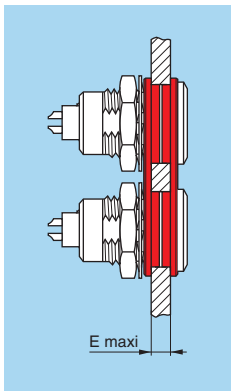

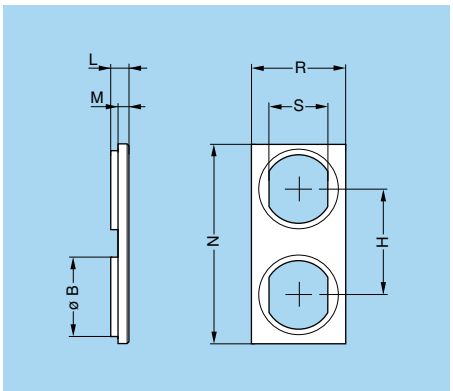

Part number	Series	Dimensions (mm)							
		B	E	H	L	M	N	R	S
GRC.0S.260.HG	0S-0B	10.9	5	14	2.5	1.5	26.5	12.5	8.3
GRC.1B.260.HG	1S-1B	13.9	5	20	3.3	1.8	34.5	14.5	10.6

Caution: these double panel washers can be used with fixed or free sockets with across flat dimension S1 equivalent to the S dimension of the washer.

- Material: Polyamide
- Maximum operating temperature: 90° C

Ref.	Colour	Ref.	Colour	Ref.	Colour
A	blue	**J**	yellow	**R**	red
B	white	**M**	brown	**S**	orange
G	grey	**N**	black	**V**	green

Note: the last letter «G» of the washer's part number indicates the colour grey. For other colours, refer to the above table and replace letter «G» by the one corresponding to the colour required. For the panel cut-out, please consult chapter «Panel cut-out» on page 158.

Tooling

DCG Spanners for hexagonal nuts

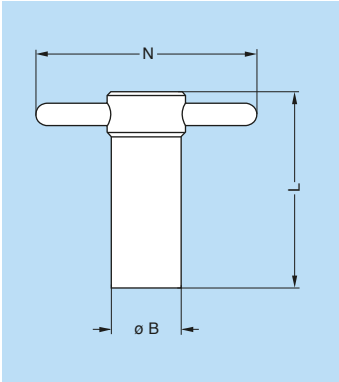

Part number	Dimensions (mm)			Part number of the nut (page 134)
	B	L	N	
DCG.91.149.0TN	14	40	50	GEA.00.240.LN
DCG.91.161.1TN	16	45	52	GEA.0S.240.LN
DCG.91.201.4TN	20	52	65	GEA.1S.240.LN
DCG.91.231.7TN	23	62	68	GEA.2S.240.LN
DCG.91.282.2TN	28	76	73	GEA.3S.240.LN

- Material: blackened steel

DCA Spanners for hexagonal nuts with locator for flats on socket thread

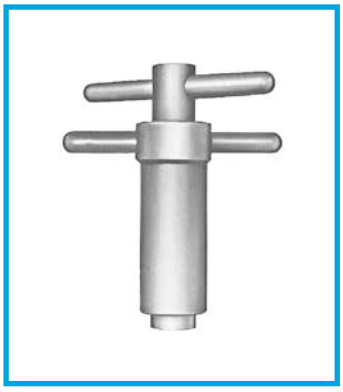

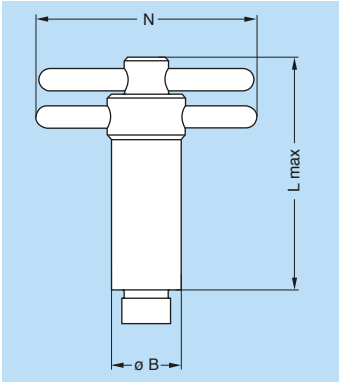

Part number	Dimensions (mm)			Part number of the nut (page 134)
	B	L	N	
DCA.91.149.0TN	14	65	50	GEA.00.240.LN
DCA.91.161.1TN	16	73	52	GEA.0S.240.LN
DCA.91.201.4TN	20	85	65	GEA.1S.240.LN
DCA.91.231.7TN	23	100	68	GEA.2S.240.LN
DCA.91.282.2TN	28	120	73	GEA.3S.240.LN

- Material: blackened steel

DCB Spanners for round nuts

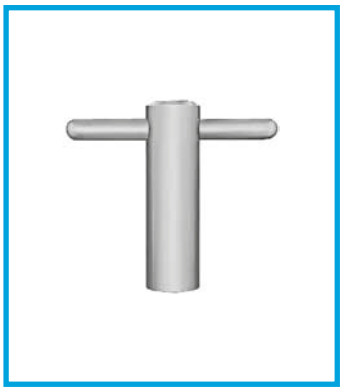

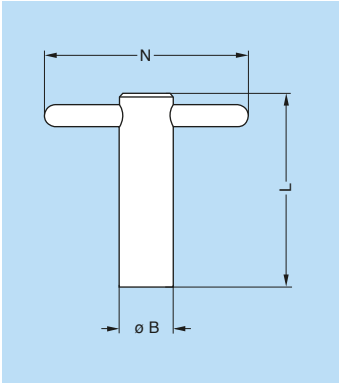

Part number	Dimensions (mm)			Part number of the nut (page 135)
	B	L	N	
DCB.91.119.0TN	11	40	50	GEB.00.240.LN
DCB.91.131.1TN	13	45	50	GEB.0S.240.LN
DCB.91.161.4TN	16	52	65	GEB.1S.240.LN
DCB.91.201.8TN	20	62	65	GEB.2S.240.LN
DCB.91.242.2TN	24	76	70	GEB.3S.240.LN

- Material: blackened steel

DCH Spanners for conical nuts

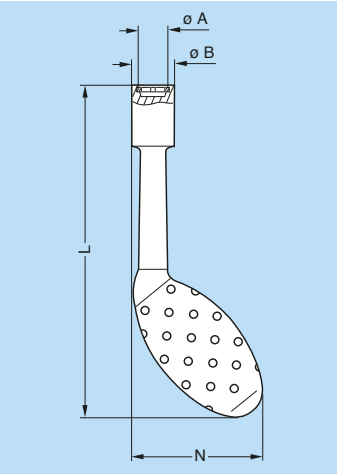

Part number	Dimensions (mm)				Part number of the nut (page 134)
	A	B	L	N	
DCH.91.101.PN	10.1	12.8	124	48.3	GEC.00.240.LC
DCH.91.121.PN	12.1	14.8	124	49.3	GEC.0S.240.LC
DCH.91.161.PN	16.1	21.0	124	51.9	GEC.1S.240.LC
DCH.91.201.PN	20.1	22.8	129	53.5	GEC.2S.240.LC

- Material: dark grey polyurethane

DCH Spanners for notched nuts

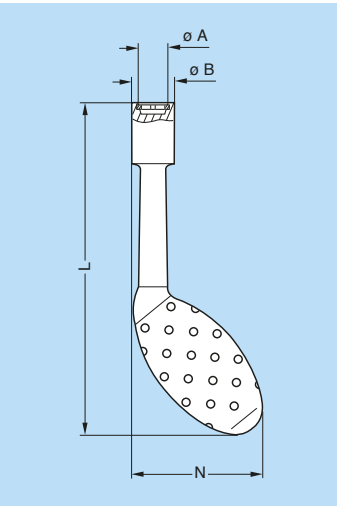

Part number	Dimensions (mm)				Part number of the nut (page 133)
	A	B	L	N	
DCH.91.101.PA	10.1	12.8	124	48.3	GEG.00.240.LC
DCH.91.121.PA	12.1	14.8	124	49.3	GEG.0S.240.LC
DCH.91.181.PA	18.1	22.8	129	53.1	GEG.0E.240.LC
DCH.91.161.PA	16.1	21.0	124	51.2	GEG.1S.240.LC
DCH.91.201.PA	20.1	22.8	129	53.5	GEG.1E.240.LC
DCH.91.141.PA	14.1	18.6	124	51.2	GEG.1S.242.LC
DCH.91.201.PA	20.1	22.8	129	53.5	GEG.2S.240.LC
DCH.91.241.PA	24.1	30.8	134	52.6	GEG.2S.241.LC
DCH.91.251.PA	25.1	32.8	134	55.5	GEG.2E.240.LC

- Material: blue polyurethane

DCP Flat spanners for collet nut

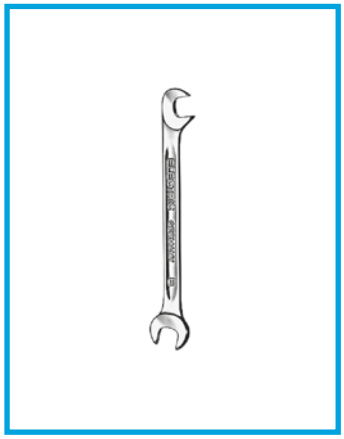

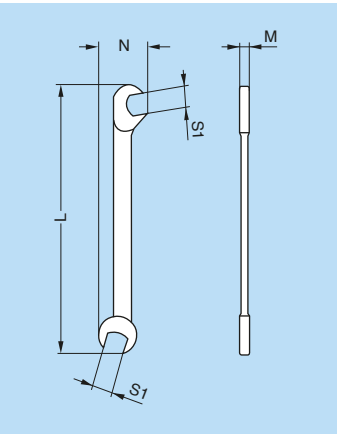

Part number	Dimensions (mm)			
	L	M	N	S1
DCP.99.040.TC	70	0.95	10.5	4.0
DCP.99.045.TC	70	2.00	10.5	4.5
DCP.99.050.TC	78	2.00	12.6	5.0
DCP.99.055.TC	78	2.00	12.6	5.5
DCP.99.060.TC	78	2.00	12.6	6.0

- Material: chrome-plated steel

DCP Set of flat spanners for collet nuts

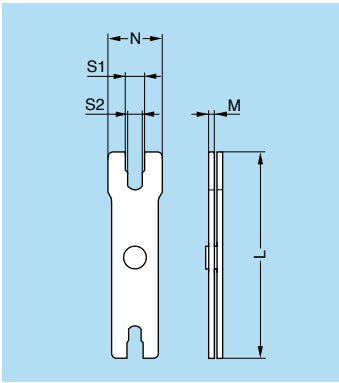

Part number	Series	Dimensions (mm)				
		L	M	N	S1	S2
DCP.91.001.TN	0B-0K	95	2.5	21	8.1	7.1
	1B-1K	95	2.5	25	10.1	9.1
DCP.91.023.TN	2B-2K	115	3.0	30	13.1	12.1
	3B-3K	115	3.0	35	15.1	14.1
DCP.91.045.TN	4B	130	3.0	44	21.1	20.1
	5B	130	3.0	54	31.1	30.1

- Material: blackened steel

DCP Set of flat spanners for collet nuts

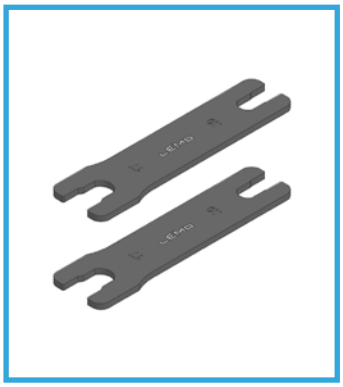

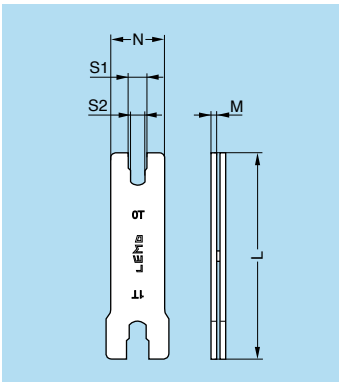

Part number	Series	Dimensions (mm)				
		L	M	N	S1	S2
DCP.0T.110.TN	0T	95	2.5	21	7.55	7.05
	1T	95	2.5	25	11.05	9.05
DCP.2T.110.TN	2T	115	3.0	30	14.05	12.05
	3T	115	3.0	35	16.05	14.05

- Material: blackened steel

DCP Set of flat spanners for FS● retaining ring & collet nuts

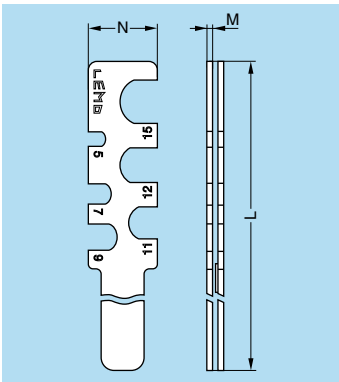

Part number	Series	Dimensions (mm)		
		L	M	N
DCP.91.FSG.TN	00-0B-1B-2B	152	2	24
DCP.91.FSG.TN3B	3B	153	2	32

- Material: blackened steel

DCP Set of flat spanners for FS● retaining ring & collet nuts

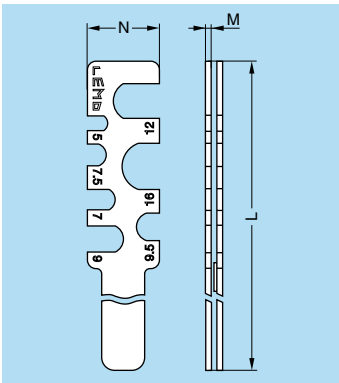

Part number	Series	Dimensions (mm)		
		L	M	N
DCP.TT.FSG.TN	TT-0T-1T-2T	152	2	25

- Material: blackened steel

DCL Spanners for assembling plugs with 2 latches

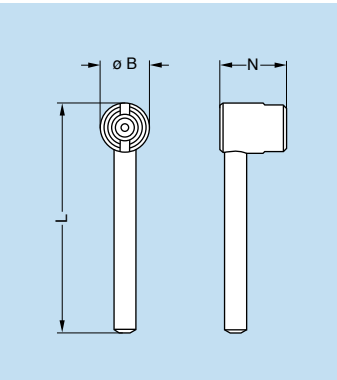

Part number	Series	Dimensions (mm)		
		B	L	N
DCL.91.105.0TK	00	10	45	13.5
DCL.91.127.0TK	0S	12	47	17.0
DCL.91.149.0TK	1S	14	52	19.0

- Material: blackened steel

DCN Spanners for assembling plugs with 3 latches

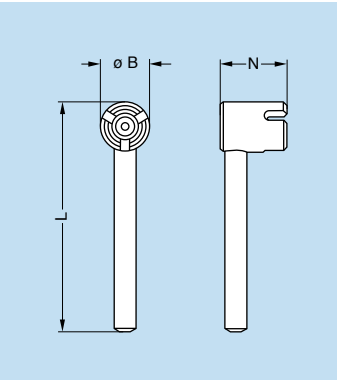

Part number	Series	Dimensions (mm)		
		B	L	N
DCN.91.905.0TK	00	9	42	12
DCN.91.125.0TK	0S	12	47	17
DCN.91.149.0TK	1S	14	53	19
DCN.91.201.5TK	3S	20	74	22

- Material: blackened steel

DCL Assembly tool for FVB.00.303.NLA plugs

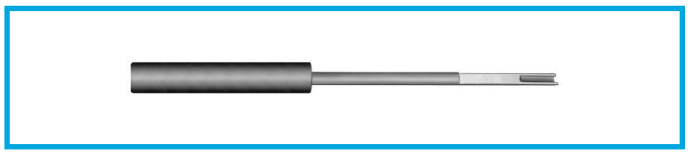

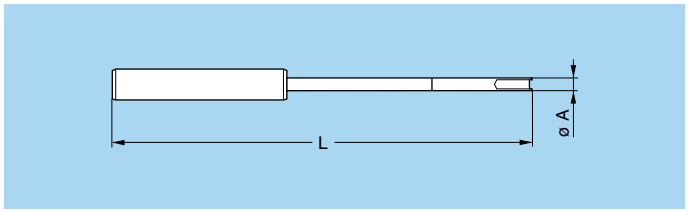

Part number	Series	Dim. (mm)	
		A	L
DCL.91.516.5TK	00	5	165

DPF Pliers for assembling plugs (series K and E)

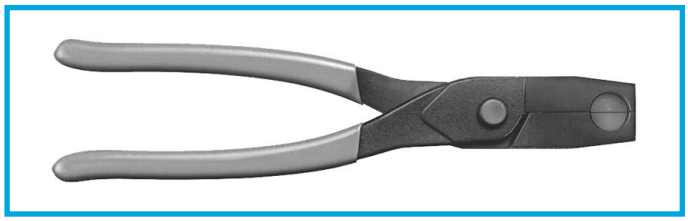

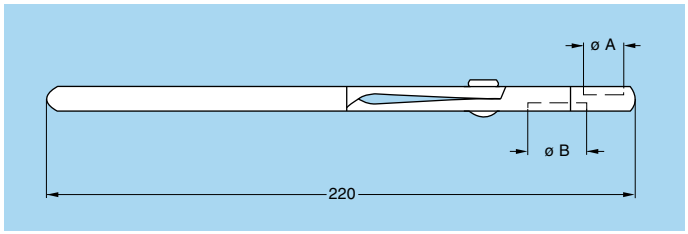

Part number	Series	Dim. (mm)	
		A	B
DPF.91.001.TA	0E-0K	10	–
	1E-1K	–	12
DPF.91.023.TA	2E-2K	15	–
	3E-3K	–	18

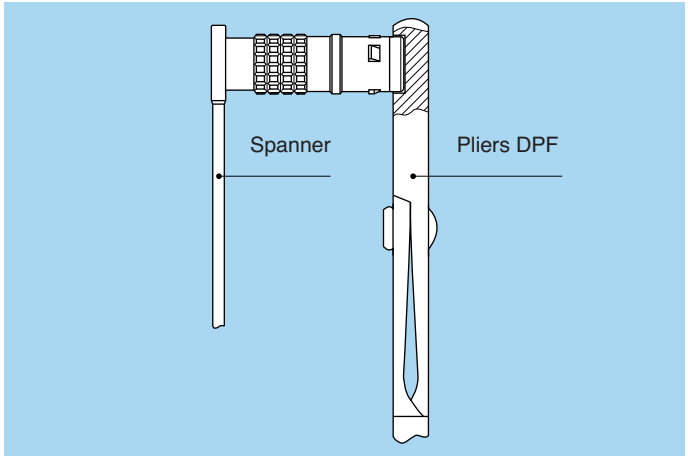

Example for use

The plug end must be held in the pliers whilst the nut is tightened with the flat spanner.

DTA Taps

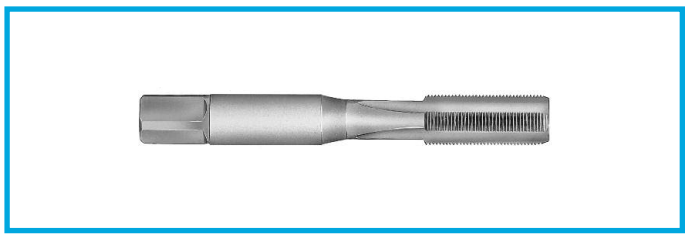

Part number	Series	Thread
DTA.99.700.5Z	00	M7 x 0.5
DTA.99.900.6Z	0S-0B	M9 x 0.6

Panel cut-outs

P1-P3-P4-P9

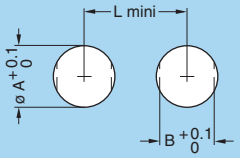

P2-P5-P10-P11

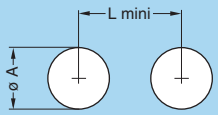

P6-P7

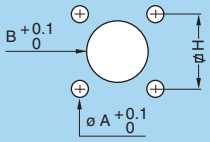

P8

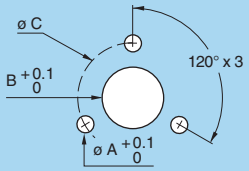

B and T series

Series	P1			P2		P3			P4			P5		P6			P8			P9			P10	
	ø A[1]	B	L	ø A	L	ø A	B	L	ø A	B	L	ø A[2]	L	ø A	B	H	ø A	B	C	ø A	B	L	ø A	L
00-TT	7.1	6.4	12.5	7.1	11.5	–	–	–	–	–	–	–	–	–	–	–	–	–	–	7.1	–	12	–	–
0B-0T	9.1	8.3	14.5	9.1	13.5	14.1	12.6	20.1	10.1	9.1	15.0	8.30	10.5	–	–	–	–	–	–	9.1	8.3	15	–	–
1B-1T	12.1	10.6	18.5	–	–	16.1	14.6	22.0	14.1	12.6	21.0	11.17	14.0	–	–	–	–	–	–	12.1	10.6	19	11.1	17
XB	14.1	12.6	21.5	–	–	–	–	–	–	–	–	–	–	–	–	–	–	–	–	–	–	–	–	–
2B-2T	15.1	13.6	22.5	–	–	19.2	17.1	28.0	16.1	15.1	23.0	13.95	18.0	–	–	–	–	–	–	15.1	13.6	23	–	–
3B-3T	18.2	16.6	27.0	–	–	–	–	–	20.2	18.6	29.5	–	–	–	–	–	–	–	–	18.2	16.6	27	–	–
4B	25.2	23.6	36.0	–	–	–	–	–	25.2	23.6	36.1	–	–	–	–	–	–	–	–	25.2	23.6	36	–	–
5B	35.2	33.6	44.0	–	–	–	–	–	35.2	33.6	47.1	–	–	3.3	35.2	34	2.8	35.2	47	35.2	33.6	47	–	–

Note: [1] when using the tapered washer (GBB) a round hole apply 00-TT: ø 7.6 mm / 0B-0T: ø 9.6 mm / 1B-1T: ø 12.6 mm / 2B-2T: ø 15.7 mm / 3B-3T: ø 18.8 mm / 4B: ø 26 mm / 5B: ø 36 mm (tolerance: 0/+0.02). [2] tolerance: 0/+0.02

Cut-out types

Model	Type
ECG	P1
EEG	P1
EGG	P1
EFG	P2
EHG	P1
EJG	P5

Model	Type
EKG	P1
ENG	P1
ENY	P1
ESG	P1/P2
EXG	P2/P10
EYG	P1/P10

Model	Type
FAG	P1
FWG	P9
HCG	P3
HEG	P9
HGG	P9
HHG	P9

Model	Type
HMG	P9
HNG	P9
PEG	P1
PFG	P1
PKG	P1
R●●	P4

Model	Type
S●●	P4/P9[3]
XBG	P2
XPF	P2
XRB	P2
YHG	P9

Note: [3] in series 1B use P9.

Mounting nut torque

Series	Torque (Nm)	
	Metal shell	Plastic shell[4]
00-TT	1.0	0.4
0B-0T	2.5	0.4
1B-1T	4.5	0.7
XB	5.0	–
2B-2T	6.0	0.8
3B-3T	9.0	1.0
4B	12.0	5.0
5B	17.0	–

Note: [4] these values apply when metal shell are mounted with insulating washer.

S series

Series	P1			P2		P3			P4			P5		P6			P7			P10		P11	
	ø A[1]	B	L	ø A	L	ø A	B	L	ø A	B	L	ø A[2]	L	ø A	B	H	ø A	B	H	ø A	L	ø A	L
00	7.1	6.4	12.5	7.1	11.5	–	–	–	–	–	–	–	–	–	–	–	–	–	–	–	–	–	–
0S	9.1	8.3	14.5	9.1	13.5	12.1	10.6	20.0	10.1	9.1	15	–	–	–	–	–	–	–	–	–	–	9.1	16
1S	12.1	10.6	18.5	12.1	19.0	14.1	12.6	21.0	12.1	10.6	18	11.92	15.5	3.3	12.1	12.7	2.7	11.1	12.4	11.1	17	12.1	19
2S	15.1	13.6	22.5	15.1	21.5	16.1	14.6	22.0	16.1	15.1	23	–	–	3.3	15.1	15.5	–	–	–	–	–	–	–
3S	18.2	16.6	27.0	18.2	27.0	20.2	18.6	30.0	20.2	18.6	29	–	–	3.3	18.2	18.0	–	–	–	–	–	–	–
4S	25.2	23.6	36.0	25.2	34.0	25.2	23.6	36.0	25.2	23.6	36	–	–	–	–	–	–	–	–	–	–	–	–
5S	35.2	33.6	44.0	35.2	44.0	35.2	33.6	47.0	35.2	33.6	47	–	–	4.4	35.2	36.8	–	–	–	–	–	–	–
6S	48.3	45.6	58.0	48.3	58.0	48.3	45.6	60.0	48.3	45.6	60	–	–	–	–	–	–	–	–	–	–	–	–

Note: [1] when using the tapered washer (GBB) a round hole apply 00: ø 7.6 mm / 0S: ø 9.6 mm / 1S: ø 12.6 mm / 2S: ø 15.7 mm / 3S: ø 18.8 mm / 4S: ø 26 mm / 5S: ø 36 mm (tolerance: 0/+0.02). [2] tolerance: 0/+0.02

Cut-out types

Model	Type
EBC	P6
EBD	P6
EBS	P7
ECP	P1
EEP	P1
EHP	P2/P1

Model	Type
ERA	P1
ERC	P1
ERD	P1
ERN	P1
ERS	P2
EXP	P2/P10

Model	Type
EWB	P3
FAA	P1/P2[3]
HCP	P3[4]
HGP	P3
HGW	P11
PSA	P1

Model	Type
PSP	P1
PSS	P1
RAD	P1/P2[5]
SWH	P4

Note: [3] in series 6S use P2. [4] use only ø A in 1S series. [5] in series 4S and 5S use P2.

Mounting nut torque

Series	Torque (Nm)	
	Metal shell	Plastic shell[6]
0S	2.5	0.4
1S	4.5	0.7
2S	6.0	0.8
3S	9.0	1.0
4S	12.0	5.0
5S	17.0	–
6S	22.0	–

Note: [6] these values apply when metal shell are mounted with insulating washer. 1 N = 0.102 kg

Panel cut-out for mounting with insulating washer (S-B series)

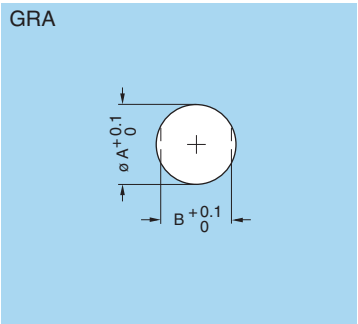

Series	Dim. (mm)	
	ø A	B
00	8.9	8.1
0S-0B	10.9	10.0
1S-1B	13.9	12.3
2S-2B	18.0	16.3
3S-3B	21.9	20.3
4S-4B	29.1	27.4

Panel cut-out for mounting with double panel washer (S-B series)

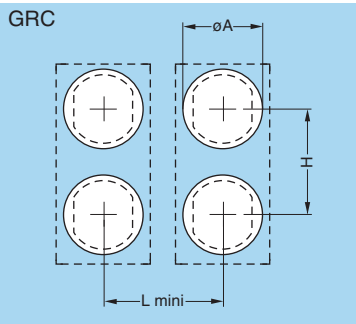

Series	Dimensions (mm)		
	ø A	H	L
0S-0B	11	14	13.5
1S-1B	14	20	17.0

Note: for nut tightening torques please refer to the corresponding series in the table on page 157.

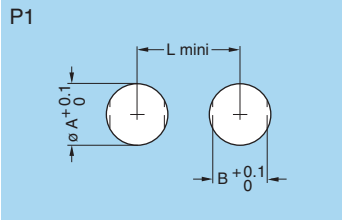

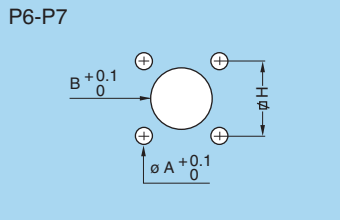

K series

Series	P1			P6			P7		
	ø A	B	L	ø A	B	H	ø A	B	H
0K	14.1	12.6	20.5	–	–	–	–	–	–
1K	16.1	14.6	22.5	–	–	–	–	–	–
2K	20.2	18.6	29.0	–	–	–	–	–	–
3K	24.2	22.6	35.5	3.5	22.6	20.6	3.5	23.1	23.0
4K	30.2	28.6	43.0	3.5	28.6	27.0	3.5	30.1	29.0
5K	45.2	42.6	57.0	4.5	42.6	38.0	4.5	45.1	44.0

Mounting nut torque

Series	Torque (Nm)
0K	5
1K	7
2K	9
3K	12
4K	17
5K	22

1 N = 0.102 kg

Cut-out types

Model	Type	Model	Type	Model	Type
EBG	P7	ENG	P1	HGG	P1
EDG	P7[2)]	EVG	P1	PBG	P7[3)]
EEG	P1	FAG	P1	PEG	P1
EGG	P1	FXG	P6	PKG	P1
EHG	P1	HEG	P1	S●●	P1

Note: [2)] for this model dimension B = 18.1. [3)] for this model dimension B = 19.1.

E series

Series	P1			P6		
	ø A	B	L	ø A	B	H
0E	14.1	12.6	20.5	–	–	–
1E	16.1	14.6	22.5	–	–	–
2E	20.2	18.6	29.0	2.9	15.1	11.8x20.4
3E	24.2	22.6	35.5	–	–	–
4E	30.2	28.6	43.0	–	–	–
5E	45.2	42.6	57.0	–	–	–
6E	55.3	52.1	68.0	–	–	–

Mounting nut torque

Series	Torque (Nm)
0E	5
1E	7
2E	9
3E	12
4E	17
5E	22
6E	27

1 N = 0.102 kg

Cut-out types E series

Model	Type	Model	Type
EBR	P6	FAA	P1
EEP	P1	HGP	P1
EHP	P1	PSA	P1
ERA	P1	PSP	P1
ERB	P1	SWH	P1
ERC	P1		

PCB drilling pattern

Fixed socket with straight print contact (B-K-T series) P15

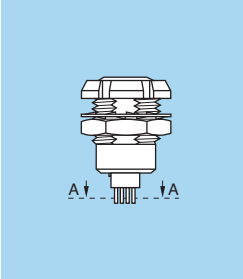

302

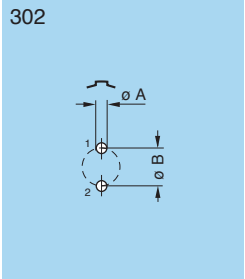

Series	Dimensions	
	A	B
00-TT	0.6	1.2
0B-0K-0T	0.8	2.2
1B-1K-1T	0.8	2.8
2B-2K-2T	0.8	4.4

303

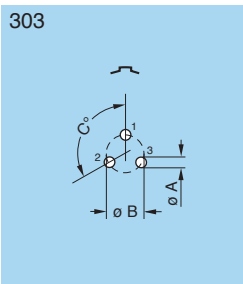

Series	Dimensions		
	A	B	C
00-TT	0.6	1.35	120°
0B-0K-0T	0.8	2.30	120°
1B-1K-1T	0.8	3.00	120°
2B-2K-2T	0.8	4.60	120°
3B-3K-3T	0.8	5.60	120°

304

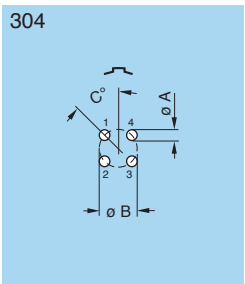

Series	Dimensions		
	A	B	C
00-TT	0.6	1.6	45°
0B-0K-0T	0.6	2.5	45°
1B-1K-1T	0.8	3.1	45°
2B-2K-2T	0.8	5.0	45°
3B-3K-3T	0.8	6.2	45°

305

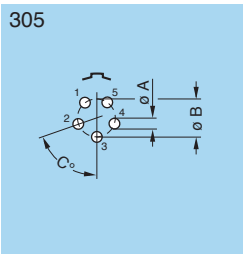

Series	Dimensions		
	A	B	C
00-TT	0.5	1.7	72°

305

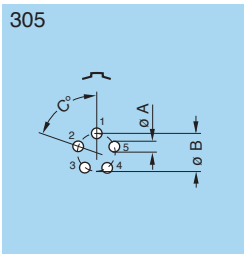

Series	Dimensions		
	A	B	C
0B-0K-0T	0.6	2.8	72°
1B-1K-1T	0.8	3.4	72°
2B-2K-2T	0.8	5.2	72°
3B-3K-3T	0.8	6.7	72°

306

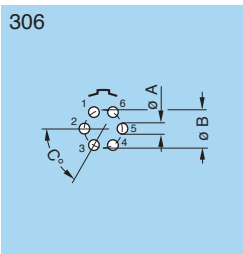

Series	Dimensions		
	A	B	C
0B-0K-0T	0.6	3.0	60°
1B-1K-1T	0.8	3.7	60°

306

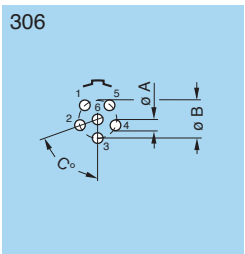

Series	Dimensions		
	A	B	C
2B-2K-2T	0.8	5.6	72°
3B-3K-3T	0.8	7.1	72°

307

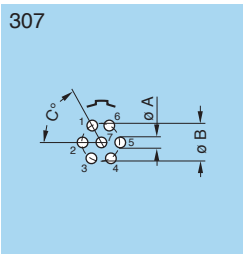

Series	Dimensions		
	A	B	C
0B-0K-0T	0.6	3.00	60°
1B-1K-1T	0.8	3.70	60°
2B-2K-2T	0.8	5.80	60°
3B-3K-3T	0.8	7.08	60°

308

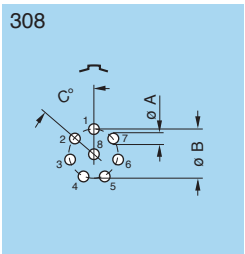

Series	Dimensions		
	A	B	C
1B-1K-1T	0.8	3.8	51°26’

308

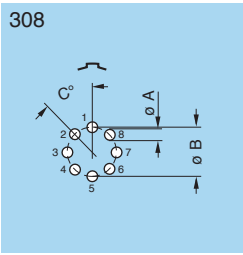

Series	Dimensions		
	A	B	C
2B-2K-2T	0.8	6.4	45°
3B-3K-3T	0.8	7.5	45°

309

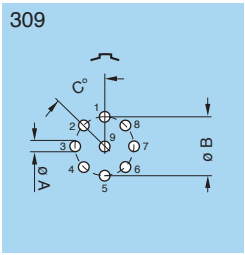

Series	Dimensions		
	A	B	C
0B-0K-0T	0.6	3.2	45°
3B-3K-3T	0.8	7.5	45°

Note: contact numbering is for female contact version only.

310

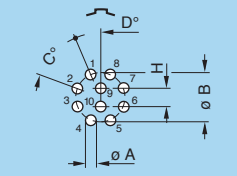

Series	Dimensions				
	A	B	C	D	H
1B-1K-1T	0.6	3.95	45°	22°30'	1.40
2B-2K-2T	0.8	6.30	45°	22°30'	2.15
3B-3K-3T	0.8	7.90	45°	22°30'	2.80

312

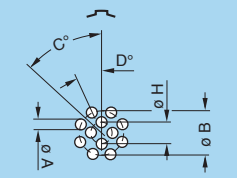

Series	Dimensions				
	A	B	C	D	H
XB	0.8	5.40	45°	22°30'	2.40

314

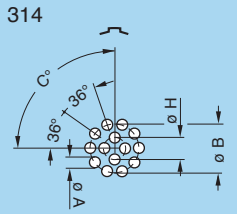

Series	Dimensions			
	A	B	C	H
1B-1K-1T	0.6	4.4	90°	1.90
2B-2K-2T	0.8	6.5	90°	2.65
3B-3K-3T	0.8	8.2	90°	3.40

316

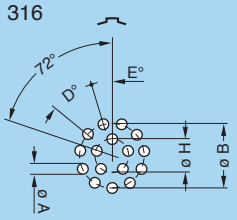

Series	Dimensions				
	A	B	D	E	H
2B-2K-2T	0.8	6.6	32°44'	16°22'	3.10
3B-3K-3T	0.8	8.4	32°44'	16°22'	3.86
4B-4K	0.6	10.5	32°44'	16°22'	5.00

319

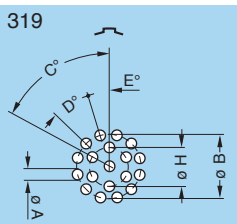

Series	Dimensions					
	A	B	C	D	E	H
2B-2K-2T	0.8	6.7	60°	30°	15°	3.5

322

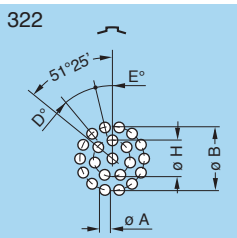

Series	Dimensions				
	A	B	D	E	H
XB	0.6	5.7	25°42'	12°51'	3.1

324

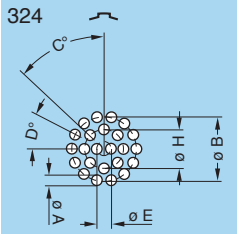

Series	Dimensions					
	A	B	C	D	E	H
3B-3K-3T	0.6	8.8	45°	25°43'	1.8	5.30
4B-4K	0.6	11.1	45°	25°43'	2.2	6.65

312

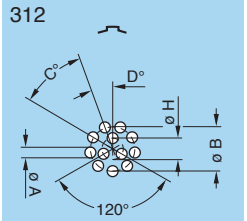

Series	Dimensions				
	A	B	C	D	H
0B-0T	0.5	3.3	40°	20°	1.25

312

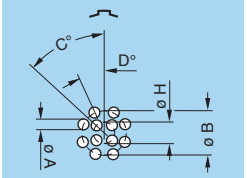

Series	Dimensions				
	A	B	C	D	H
2B-2K-2T	0.8	6.50	45°	22°30'	2.80
3B-3K-3T	0.8	8.20	45°	22°30'	3.40

316

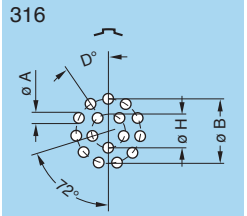

Series	Dimensions			
	A	B	D	H
1B-1K-1T	0.6	4.4	32°44'	2.00

318

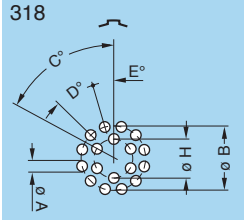

Series	Dimensions					
	A	B	C	D	E	H
2B-2K-2T	0.8	6.7	60°	30°	15°	3.50
3B-3K-3T	0.8	8.4	60°	30°	15°	4.34

320

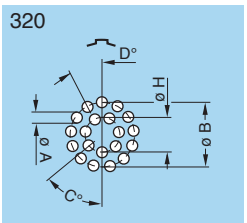

Series	Dimensions				
	A	B	C	D	H
3B-3K-3T	0.6	8.62	51°26'	27°42'	4.78
4B-4K	0.6	11.00	51°26'	27°42'	6.00

322

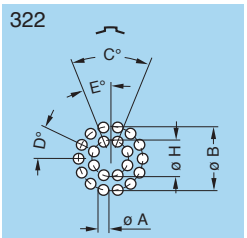

Series	Dimensions					
	A	B	C	D	E	H
3B-3K-3T	0.6	8.8	45°	25°43'	22°30'	5

2B-2K-2T.326

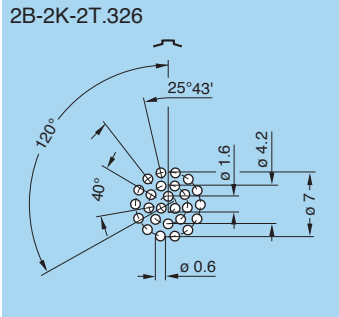

3B-3K-3T.326

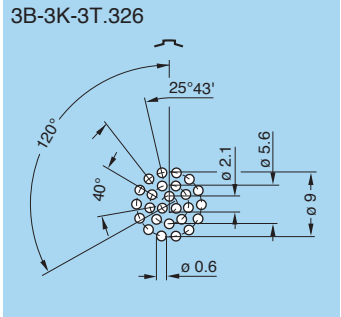

Note: contact numbering is for female contact version only.

3B-3K-3T.330

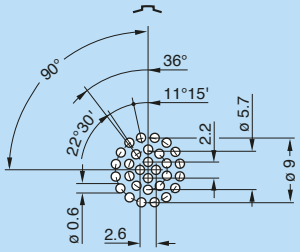

4B-4K.330

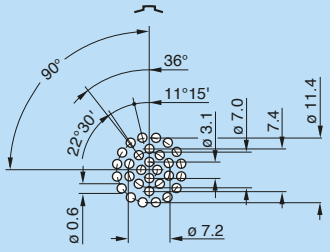

2B-2K-2T.332

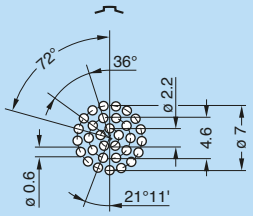

3B-3K-3T.332

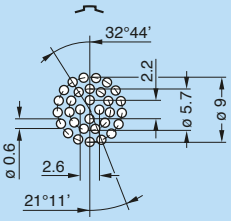

4B-4K.340

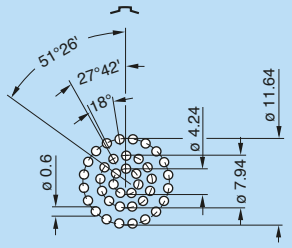

4B-4K.348

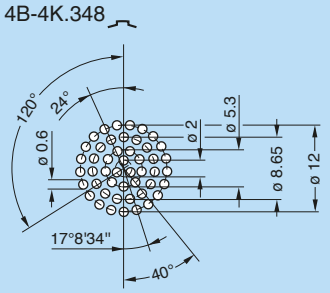

5B-5K.350

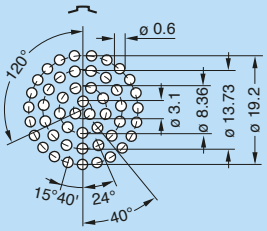

5B-5K.354

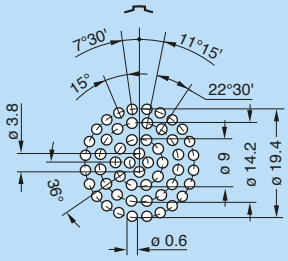

5B-5K.364

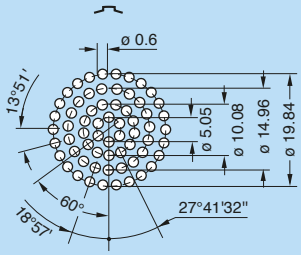

Note: all views are from the side of the socket.

Length of straight print contacts (for socket E●●)

	Type	Dimensions ø C	Dimensions L
00 TT	302/303/304	0.5	3.0
0B 0K 0T	302/303	0.7	3.2
	304/305/306/307/309	0.5	3.2
	312	0.4	3.0
1B 1K 1T	302/303/304/305/306/307/308	0.7	3.0
	310/314/316	0.5	4.0
XB	312	0.7	3.0
	322	0.5	3.0
2B 2K 2T	302/303/304/305/306/307 308/310/312/314/316/318/319	0.7	3.0
	326/332	0.5	3.0
3B 3K 3T	303/304/305/306/307/308/309 310/312/314/316/318	0.7	3.0
	320/322/324/326/330/332	0.5	5.0
4B 4K	316/320/324/330/340/348	0.5	5.0
5B 5K	348	0.7	5.0
	350/354/364	0.5	5.0

Length of straight print contacts (for socket EZG/EYG/XPF)

	Type	Models EZG/EYG ø C	Models EZG/EYG L	Models XPF ø C	Models XPF L
0B	302/303	0.7	4.5	–	–
	304/305	0.5	4.5	0.7	3.0
	306/307/309	0.5	3.0	–	–
1B	302/303/304/305/306/307/308	0.7	3.8	–	–
	310/314/316	0.5	3.8	–	–
2B	302/303/304/305/306/307/308 310/312/314/316/318/319	0.7	5.5	–	–

E●●

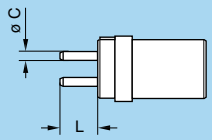

EZG/EYG/XPF

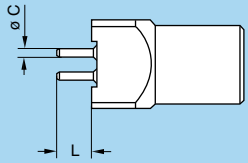

Note: This table does not apply for socket H●●; socket EH● and plugs FA●/FW●.

Fixed socket for printed circuit (B series) P16

Holes for fixing the housing

EYG-EZG

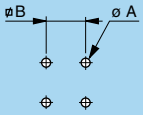

Series	Dimensions A	Dimensions B
00	0.8[1)]	5.08
0B	1.7[2)]	7.62
1B	1.7[2)]	7.62
2B	1.7[2)]	10.16

XPF.0B

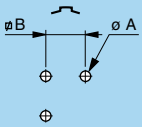

Series	Dimensions A	Dimensions B
0B	1.7	5.08

Note: Mounting torque for screws: 0.1 Nm. [1)] to solder. [2)] to screw.

Fixed socket with elbow print contact (B-K-T series) P17

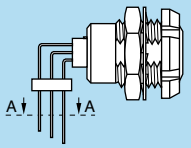

302

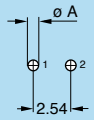

Series	Dim. A
00-TT	0.6
0B-0K-0T	0.7
1B-1K-1T	0.9
2B-2K-2T	0.9

303

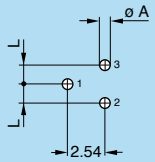

Series	Dimensions A	Dimensions L
00-TT	0.6	1.27
0B-0K-0T	0.7	1.27
1B-1K-1T	0.9	1.27
2B-2K-2T	0.9	2.54

304

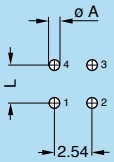

Series	Dimensions A	Dimensions L
00-TT	0.6	2.54
0B-0K-0T	0.7	2.54
1B-1K-1T	0.7	2.54
2B-2K-2T	0.9	3.50
3B-3K-3T	0.9	2.54

0B-0K-0T.305

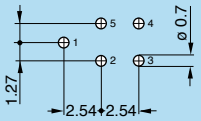

1B-1K-1T / 3B-3K-3T.305

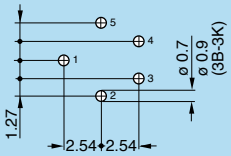

2B-2K-2T.305

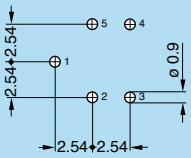

0B-0K-0T / 1B-1K-1T.306

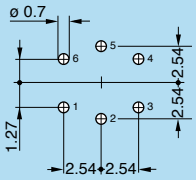

2B-2K-2T / 3B-3K-3T.306

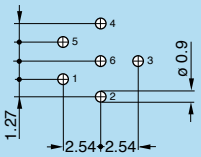

0B-0K-0T / 1B-1K-1T.307

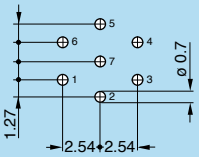

2B-2K-2T.307

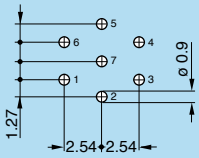

1B-1K-1T.308

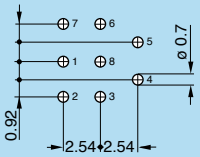

2B-2K-2T / 3B-3K-3T.308

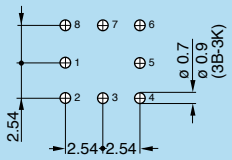

0B-0K-0T.309

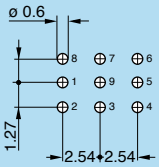

1B-1K-1T / 2B-2K-2T / 3B-3K-3T.310

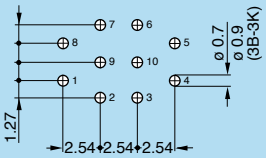

2B-2K-2T / 3B-3K-3T.312

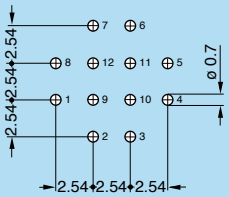

1B-1K-1T / 2B-2K-2T / 3B-3K-3T.314

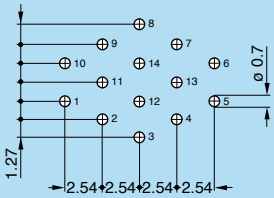

2B-2K-2T / 3B-3K-3T.316

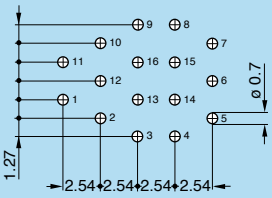

2B-2K-2T.318

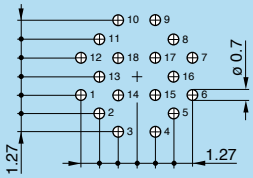

3B-3K-3T.318

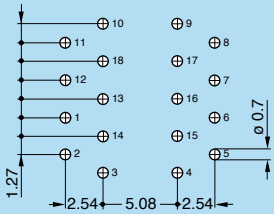

Note: contact numbering is for female contact version only.

Fixed socket with elbow print contact (B-K-T series) P17

2B-2K-2T.319

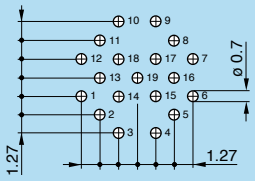

3B-3K-3T.320

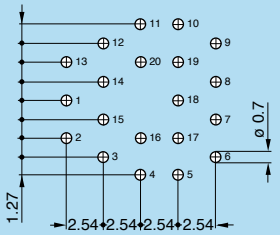

3B-3K-3T.324

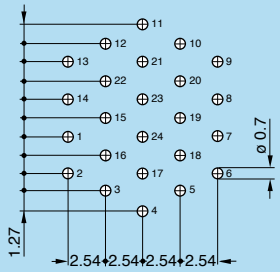

2B-2K-2T.326

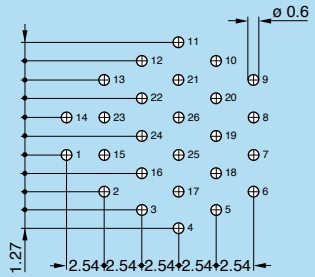

3B-3K-3T.326

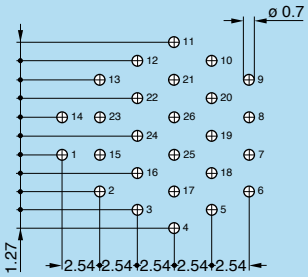

3B-3K-3T.330

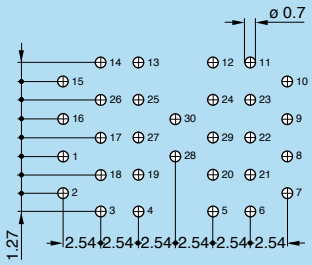

2B-2K-2T.332

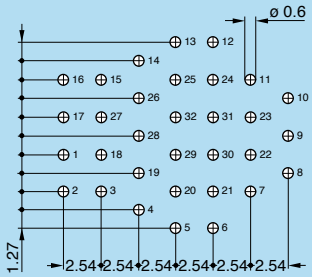

3B-3K.332

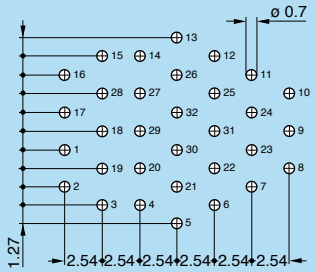

Note: contact numbering is for female contact version only.

Elbow socket (90°) for printed circuit (B series) P18 P19 P20

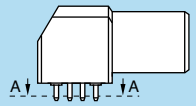

P18 - EPG.00.302 - XBG.00.302
XRB.00.302[1)]

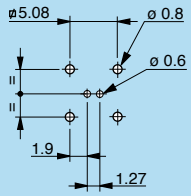

P18 - EPG.00.303[2)] - XBG.00.303[2)]
XRB.00.303[1)]

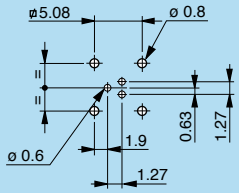

P18 - EPG.00.304 - XBG.00.304
XRB.00.304[1)]

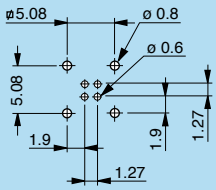

P18 - EPG.00.305

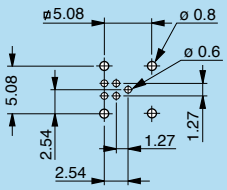

P19 - EPG-EXG (0B/1B.302)
Solder mount

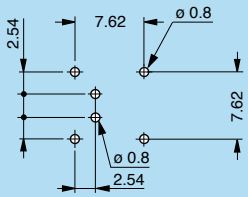

P19 - EPG-EXG (0B/1B.302)
Screw mount

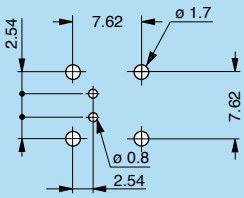

Note: [1)] for the XRB.00 series the holes for shell fixing are different (see p. 35).
[2)] the dimensions for the EPG.00.303.HLN and XBG.00.303.HLN models are given on page 26. For other models please contact factory.

Elbow socket (90°) for printed circuit (B series) P18 P19 P20

P19 - EPG-EXG (0B/1B.303)
Solder mount

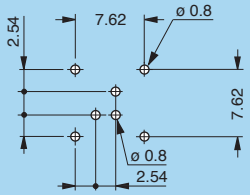

P19 - EPG-EXG (0B/1B.303)
Screw mount

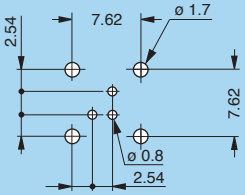

P19 - EPG-EXG (0B/1B.304)
Solder mount

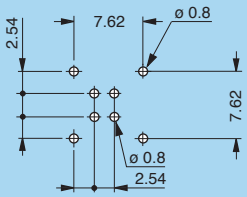

P19 - EPG-EXG (0B/1B.304)
Screw mount

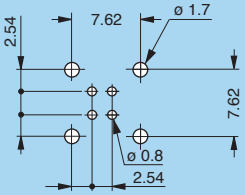

P19 - EPG-EXG (0B/1B.305)
Solder mount

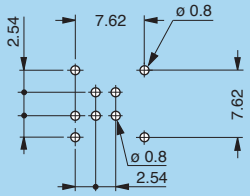

P19 - EPG-EXG (0B/1B.305)
Screw mount

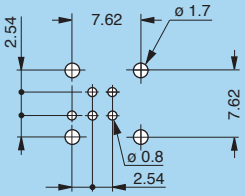

P19 - EPG-EXG (0B/1B.306)
Solder mount

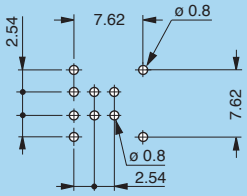

P19 - EPG-EXG (0B/1B.306)
Screw mount

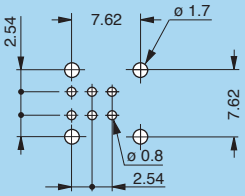

P19 - EPG-EXG (0B/1B.307)
Solder mount

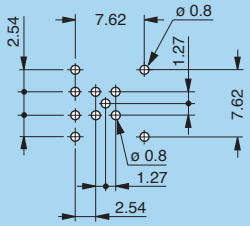

P19 - EPG-EXG (0B/1B.307)
Screw mount

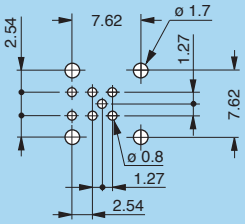

P19 - EPG-EXG (1B.308)
Solder mount

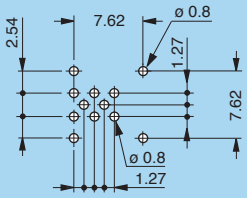

P19 - EPG-EXG (1B.308)
Screw mount

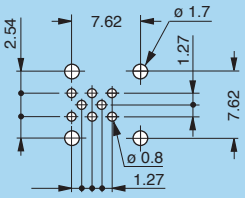

P19 - EPG-EXG (0B.309)
Solder mount

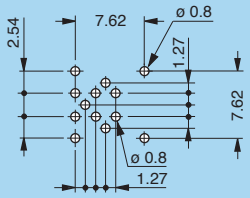

P19 - EPG-EXG (0B.309)
Screw mount

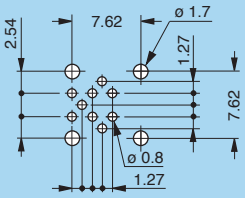

P19 - EPG-EXG (1B.310)
Solder mount

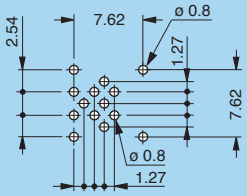

P19 - EPG-EXG (1B.310)
Screw mount

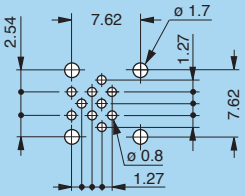

P20 - EPG.1B.314
Solder mount

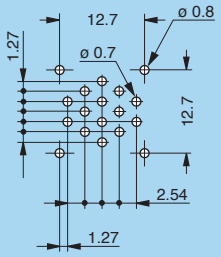

P20 - EPG.1B.314
Screw mount

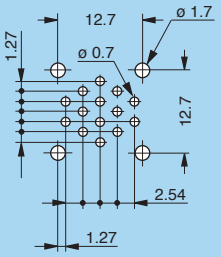

Fixed socket with straight print contact (S-E series) P21

302

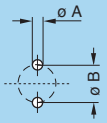

Series	Dimensions	
	A	B
0S-0E	0.8	2.2
1S-1E	0.8	3.0
2S-2E	0.8	4.5

303

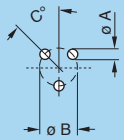

Series	Dimensions		
	A	B	C
0S-0E	0.6	2.8	45°
1S-1E	0.8	3.5	45°
2S-2E	0.8	5.5	60°

Fixed socket with straight print contact (S-E series) P21

304

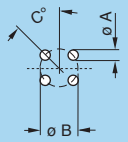

Series	Dimensions		
	A	B	C
0S-0E	0.6	2.8	45°
1S-1E	0.8	3.5	45°
2S-2E	0.8	5.0	45°

305

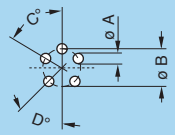

Series	Dimensions			
	A	B	C	D
1S-1E	0.8	3.5	60°	45°
2S-2E	0.8	5.5	60°	60°

306

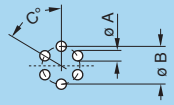

Series	Dimensions		
	A	B	C
1S-1E	0.8	3.5	60°
2S-2E	0.8	5.5	60°
3S-3E	0.8	6.5	60°

307

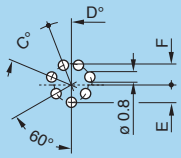

Series	Dimensions			
	C	D	E	F
2S-2E	45°	22°30'	2.75	3.25
3S-3E	45°	22°30'	3.25	3.90

308

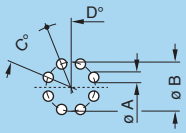

Series	Dimensions			
	A	B	C	D
2S-2E	0.8	6.5	45°	22°30'
3S-3E	0.8	7.8	45°	22°30'

310

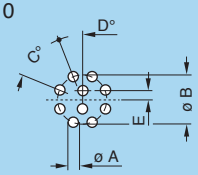

Series	Dimensions				
	A	B	C	D	E
2S-2E	0.8	6.5	45°	22°30'	1.25
3S-3E	0.8	7.8	45°	22°30'	1.50

3S-3E.312

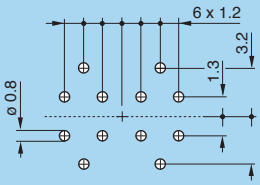

3S-3E.313

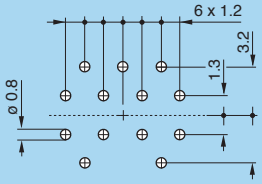

3S-3E.314

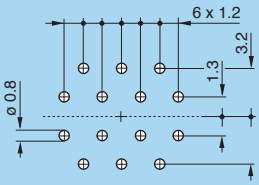

3S-3E.316

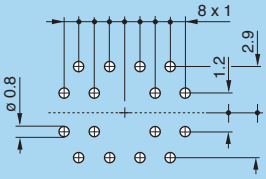

3S-3E.318

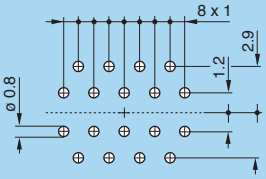

Note: all views are from the side of the socket.

Length of straight print contacts (for socket E••)

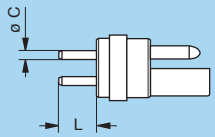

	Type	Dimensions	
		ø C	L
0S 0E	**302**	0.7	3.0
	303/304	0.5	3.0
1S 1E	**302**	0.7/1.5	3.0/5.0
	303/304/305	0.7	3.0
	305/306	0.5	3.0

	Type	Dimensions	
		ø C	L
2S 2E	**303/304/305/306/307/308/310**	0.7	3.0
3S 3E	**305/306/307/308/310 312/313/314/316/318**	0.7	3.0

Note: This table does not apply for HGP and EHP sockets and for FAA plugs.

Elbow socket (90°) for printed circuit (S series) P22 P23

P22 - EPL - EXP
Solder mount

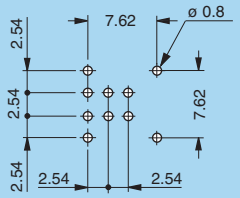

P22 - EPL - EXP
Screw mount

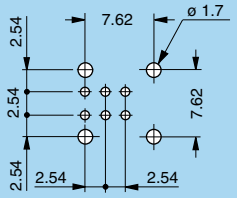

P23 - EPL.00.113

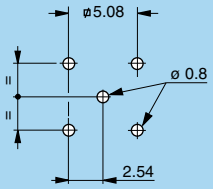

P23 - EPL.0S.116

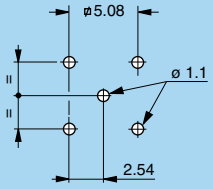

Note: all dimensions are in millimetres.

Fixed socket with elbow print contact (S-E series) P24

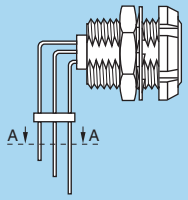

302

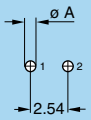

Series	Dim. A
0S-0E	0.7
1S-1E	0.9

303

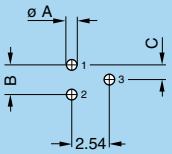

Series	Dimensions		
	A	B	C
0S-0E	0.7	2.00	1.00
1S-1E	0.7	2.48	1.24

304

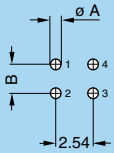

Series	Dimensions	
	A	B
0S-0E	0.7	2.0
1S-1E	0.7	3.5
2S-2E	0.9	3.5

305

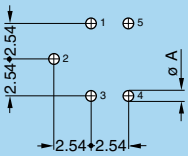

Series	Dim. A
1S-1E	0.7
2S-2E	0.9

306

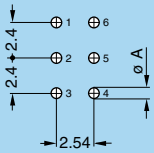

Series	Dim. A
1S-1E	0.7
2S-2E	0.9

2S-2E.307

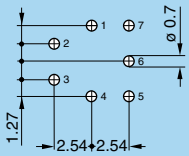

2S-2E.308

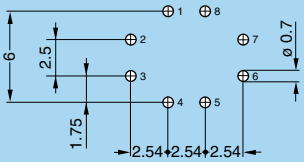

2S-2E / 3S-3E.310

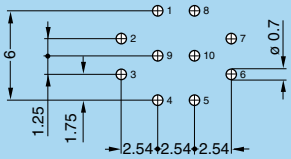

3S-3E.312

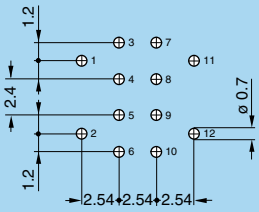

3S-3E.314

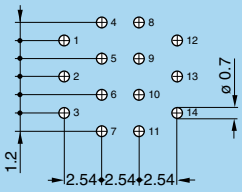

3S-3E.316

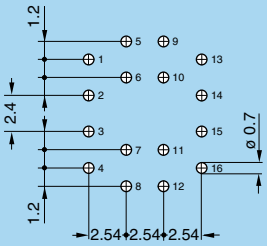

Cable assembly (B, K, T, S and E series)

Cable stripping lengths (B series)

M1 **straight plugs and sockets with cable collet, clamping type D or M (solder or crimp contacts)**

M3 **elbow plugs (90°) with cable collet, clamping type D or M (solder or crimp contacts)**

	Type	ø contact A (mm)	Cable stripping lengths (mm)											
			M1						M3					
			Solder			Crimp			Solder			Crimp		
			L	S	T	L	S	T	L	S	T	L	S	T
00	302/303/304	0.5	7.0	4	2.5	10.0	4	3.0	9.5	4	2.5	12.5	4	3.0
	305/306	0.35	7.0	4	2.5	–	–	–	9.5	4	2.5	–	–	–
0B[1]	302/303	0.9	14.5	7	3.5	17.0	7	4.0	19.5	7	3.5	22.0	7	4.0
	304/305	0.7	14.5	7	3.5	17.0	7	4.0	19.5	7	3.5	22.0	7	4.0
	306/307/309[2]	0.5	14.0	7	2.5	18.0	7	3.0	19.0	7	2.5	23.0	7	3.0
	312	0.35	14.0	7	2.5	–	–	–	19.0	7	2.5	–	–	–
1B[1]	302/303	1.3	14.5	8	3.5	18.0	8	4.0	25.5	8	3.5	28.0	8	4.0
	304/305	0.9	14.5	8	3.0	18.0	8	4.0	25.5	8	3.0	28.0	8	4.0
	306/307/308	0.7	14.5	8	3.0	18.0	8	4.0	25.5	8	3.0	28.0	8	4.0
	310/314/316	0.5	16.5	8	2.5	–	–	–	27.5	8	2.5	–	–	–
XB	312	0.7	16.5	7.5	3.5	–	–	–	–	–	–	–	–	–
	322	0.5	17.5	8	4.0	–	–	–	–	–	–	–	–	–
2B	302	2.0	19.0	9	4.0	22.0	9	5.5	30.0	9	4.0	33.0	9	5.5
	303	1.6	19.0	9	3.5	22.0	9	5.5	30.0	9	3.5	33.0	9	5.5
	304/305/306/307	1.3	18.0	9	3.5	20.0	9	4.0	29.0	9	3.5	31.0	9	4.0
	308/310	0.9	17.0	9	3.0	20.0	9	4.0	28.0	9	3.0	31.0	9	4.0
	312/314/316/318/319	0.7	17.0	9	3.0	20.0	9	4.0	28.0	9	3.0	31.0	9	4.0
	326/332	0.5	17.0	9	2.5	–	–	–	28.0	9	2.5	–	–	–
3B	302	3.0	24.0	10	4.5	28.0	10	5.5	35.0	10	4.5	39.0	10	5.5
	303/304	2.0	23.0	10	4.0	27.0	10	5.5	34.0	10	4.0	38.0	10	5.5
	305/306/307	1.6	23.0	10	3.5	27.0	10	5.5	34.0	10	3.5	38.0	10	5.5
	308/310	1.3	22.0	10	3.5	25.0	10	4.0	33.0	10	3.5	36.0	10	4.0
	309	1.3 2.0	22.0	10	3.5 4.0	25.0	10	4.0 5.5	33.0	10	3.5 4.0	36.0	10	4.0 5.5
	312/314/316/318	0.9	21.0	10	3.0	25.0	10	4.0	32.0	10	3.0	36.0	10	4.0
	320/322/324/326/330/332	0.7	21.0	10	3.0	25.0	10	4.0	32.0	10	3.0	36.0	10	4.0

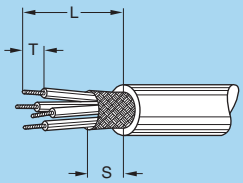

Note: [1] In 0B and 1B series, «L» and «S» dimensions shall be increased by 2 mm for the largest collet (D56 in 0B series; D76 in 1B series). The tolerances on these dimensions are: L: ± 0.5 mm; S: ± 0.5 mm; T: ± 0.2 mm.

Cable stripping lengths (B series)

M1 **straight plugs and sockets with cable collet, clamping type D or M (solder or crimp contacts)**

M3 **elbow plugs (90°) with cable collet, clamping type D or M (solder or crimp contacts)**

	Type	ø contact A (mm)	Cable stripping lengths (mm)											
			M1						M3					
			Solder			Crimp			Solder			Crimp		
			L	S	T	L	S	T	L	S	T	L	S	T
4B	304	3.0	33.0	12	4.5	36.0	12	5.5	41.0	12	4.5	45.0	12	5.5
	306/307	2.0	32.0	12	4.0	36.0	12	5.5	41.0	12	4.0	45.0	12	5.5
	310	1.6	32.0	12	3.5	36.0	12	5.5	39.0	12	3.5	43.0	12	5.5
	312	1.3	32.0	12	3.5	36.0	12	4.0	39.0	12	3.5	43.0	12	4.0
	316/320/324/330	0.9	32.0	12	3.0	34.0	12	4.0	39.0	12	3.0	43.0	12	4.0
	340/348	0.7	32.0	12	3.0	34.0	12	4.0	39.0	12	3.0	43.0	12	4.0
5B[1]	302	6.0	42.0	18	7.5	–	–	–	70.0	18	7.5	–	–	–
	304	4.0	47.0	18	5.5	50.0	18	7.0	75.0	18	5.5	78.0	18	7.0
	310	3.0	47.0	18	4.5	50.0	18	7.0	75.0	18	4.5	78.0	18	7.0
	314/316	2.0	46.0	18	4.0	49.0	18	5.5	74.0	18	4.0	77.0	18	5.5
	320	1.6	46.0	18	3.5	49.0	18	5.5	74.0	18	3.5	77.0	18	5.5
	330/340/348	1.3	45.0	18	3.5	48.0	18	4.0	74.0	18	3.5	77.0	18	4.0
	350/354/364	0.9	45.0	18	3.0	48.0	18	4.0	74.0	18	3.0	77.0	18	4.0

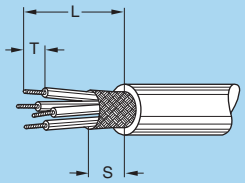

Note: [1] In 5B series, «L» and «S» dimensions shall be increased by 13 mm for the largest collet (D25).

M5 **elbow plugs (90°) with cable collet, clamping type D or M (solder or crimp contacts) (FSG model)**

	Type	ø contact A (mm)	Cable stripping lengths (mm)					
			M5					
			Solder			Crimp		
			L	S	T	L	S	T
00	302/303/304	0.5	12.0	4	2.5	15.0	5	3.0
	305/306	0.35	12.0	4	2.5	–	–	–
0B	302/303	0.9	21.5	7	3.5	24.0	7	4.0
	304/305	0.7	21.5	7	3.5	24.0	7	4.0
	306/307/309[1]	0.5	21.0	7	3.5	24.0	7	3.0
	312	0.35	21.0	7	3.5	–	–	–
1B	302/303	1.3	27.0	8	3.5	32.0	8	4.0
	304/305	0.9	27.0	8	3.5	32.0	8	4.0
	306/307[2]/308	0.7	27.0	8	3.5	32.0	8	4.0
	310/314/316[3]	0.5	29.0	8	3.5	–	–	–
2B	302	2.0	35.0	9	4.0	38.0	9	5.5
	303	1.6	35.0	9	4.0	38.0	9	5.5
	304/305/306/307	1.3	34.0	9	4.0	36.0	9	4.0
	308/310	0.9	33.0	9	4.0	36.0	9	4.0
	312/314/316/318/319	0.7	33.0	9	3.5	36.0	9	4.0
	326/332	0.5	33.0	9	3.5	–	–	–

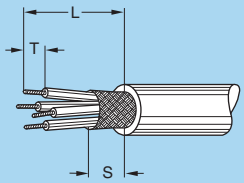

Note: [1] center wire L = 16.5. [2] center wire L = 20.5. [3] 5 center wires L = 20.5.
The tolerances on these dimensions are: L: ± 0.5 mm; S: ± 0.5 mm; T: ± 0.2 mm.

Cable stripping lengths (B series)

M4 **straight plug, short version, clamping type D or M (solder or crimp contacts)**

	Type	ø contact A (mm)	Cable stripping lengths (mm) M4 Solder L	Solder S	Solder T	Crimp L	Crimp S	Crimp T
0B	302/303	0.9	9.5	8	3.0	13.0	8	4.0
	304/305	0.7	9.5	8	3.0	13.0	8	4.0
	306/307/309[2]	0.5	10.0	8	2.5	13.5	8	3.0

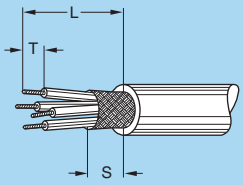

M2 **straight plug, long version, clamping type D or M (solder or crimp contacts)**

	Type	ø contact A (mm)	Cable stripping lengths (mm) M2 Solder L	Solder S	Solder T	Crimp L	Crimp S	Crimp T
1B[1]	302/303	1.3	39.5	8	3.5	43.0	8	4.0
	304/305	0.9	39.5	8	3.0	43.0	8	4.0
	306/307/308	0.7	39.5	8	3.0	43.0	8	4.0
	310/314/316	0.5	42.0	8	2.5	–	–	–
2B	302	2.0	49.0	9	4.0	53.0	9	5.5
	303	1.6	49.0	9	3.5	53.0	9	5.5
	304/305/306/307	1.3	48.0	9	3.5	50.0	9	4.0
	308/310	0.9	47.0	9	3.0	49.0	9	4.0
	312/314/316/318/319	0.7	47.0	9	3.0	49.0	9	4.0
	326/332	0.5	47.0	9	2.5	–	–	–

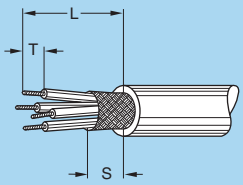

Note: [1] In 1B series, «L» and «S» dimensions shall be increased by 2 mm for the largest collet (D76 in 1B series).
[2] Crimp contacts are available only for connectors fitted with male contacts.
The tolerances on these dimensions are: L: ± 0.5 mm; S: ± 0.5 mm; T: ± 0.2 mm.

Cable stripping lengths (K series)

M1 **straight plugs and sockets with cable collet, clamping type C (solder or crimp contacts)**

M3 **elbow plug (90°) with cable collet, clamping type C (solder or crimp contacts)**

	Type	ø contact A (mm)	Cable stripping lengths (mm)											
			M1						M3					
			Solder			Crimp			Solder			Crimp		
			L	S	T	L	S	T	L	S	T	L	S	T
0K	302/303	0.9	9.5	6	3.5	12.0	6	4.0	22.5	6	3.5	25.0	6	4.0
	304/305	0.7	9.5	6	3.5	12.0	6	4.0	22.5	6	3.5	25.0	6	4.0
	306/307/309[1)]	0.5	9.0	6	2.5	13.0	6	4.0	22.0	6	2.5	26.0	6	4.0
	312	0.35	9.0	6	2.5	–	–	–	22.0	6	2.5	–	–	–
1K	302/303	1.3	11.0	7	3.5	14.5	7	4.0	27.5	7	3.5	31.0	7	4.0
	304/305	0.9	11.0	7	3.0	14.5	7	4.0	27.5	7	3.0	31.0	7	4.0
	306/307/308	0.7	11.0	7	3.0	14.5	7	4.0	27.5	7	3.0	31.0	7	4.0
	310/314/316	0.5	13.0	7	2.5	14.0	7	3.0	29.5	7	2.5	–	–	–
2K	302	2.0	16.5	8	4.0	19.5	8	5.5	36.0	8	4.0	39.0	8	5.5
	303	1.6	16.5	8	3.5	19.5	8	5.5	36.0	8	3.5	39.0	8	5.5
	304/305/306/307	1.3	15.5	8	3.5	17.5	8	4.0	35.0	8	3.5	37.0	8	4.0
	308/310	0.9	14.5	8	3.0	17.5	8	4.0	34.0	8	3.0	37.0	8	4.0
	312/314/316/318/319	0.7	14.5	8	3.0	17.5	8	4.0	34.0	8	3.0	37.0	8	4.0
	326/332	0.5	14.5	8	2.5	–	–	–	34.0	8	2.5	–	–	–
3K	302	3.0	19.0	10	4.5	23.0	10	5.5	48.0	10	4.5	53.0	10	5.5
	303/304	2.0	18.0	10	4.0	22.0	10	5.5	48.0	10	4.0	52.0	10	5.5
	305/306/307	1.6	18.0	10	3.5	22.0	10	5.5	48.0	10	3.5	52.0	10	5.5
	308/310	1.3	17.0	10	3.5	20.0	10	4.0	47.0	10	3.5	50.0	10	4.0
	309	1.3 2.0	17.0	10	3.5 4.0	20.0	10	4.0 5.5	47.0	10	3.5 4.0	50.0	10	4.0 5.5
	312/314/316/318	0.9	16.0	10	3.0	20.0	10	4.0	46.0	10	3.0	50.0	10	4.0
	320/322/324/326/330	0.7	16.0	10	3.0	20.0	10	4.0	46.0	10	3.0	50.0	10	4.0
4K	304	3.0	22.0	11	4.5	25.0	11	5.5	52.0	11	4.5	55.0	11	5.5
	306/307	2.0	21.0	11	4.0	25.0	11	5.5	51.0	11	4.0	55.0	11	5.5
	310	1.6	21.0	11	3.5	25.0	11	5.5	51.0	11	3.5	55.0	11	5.5
	312	1.3	21.0	11	3.5	25.0	11	4.0	51.0	11	3.5	55.0	11	4.0
	316/320/324/330	0.9	21.0	11	3.0	23.0	11	4.0	51.0	11	3.0	53.0	11	4.0
	340/348	0.7	21.0	11	3.0	23.0	11	4.0	51.0	11	3.0	53.0	11	4.0
5K	302	6.0	24.0	14	7.5	–	–	–	–	–	–	–	–	–
	304	4.0	29.0	14	5.5	32.0	14	7.0	–	–	–	–	–	–
	310	3.0	29.0	14	4.5	32.0	14	7.0	–	–	–	–	–	–
	314/316	2.0	28.0	14	4.0	31.0	14	5.5	–	–	–	–	–	–
	320	1.6	28.0	14	3.5	31.0	14	5.5	–	–	–	–	–	–
	330/340/348	1.3	27.0	14	3.5	30.0	14	4.0	–	–	–	–	–	–
	350/354/364	0.9	27.0	14	3.0	30.0	14	4.0	–	–	–	–	–	–

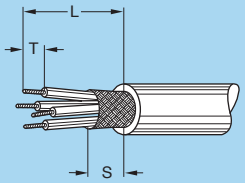

Note: [1)] crimp contacts are available only for connectors fitted with male contacts. The tolerances on these dim. are: L: ± 0.5 mm; S: ± 0.5 mm; T: ± 0.2 mm.

Cable stripping lengths (K series)

M2 **straight plug and socket with oversize cable collet, clamping type K (solder or crimp contacts)**

	Type	ø contact A (mm)	Cable stripping lengths (mm) M2 Solder L	Solder S	Solder T	Crimp L	Crimp S	Crimp T
1K	302/303	1.3	23.5	8	3.5	27.5	8	4.0
	304/305	0.9	23.5	8	3.0	27.5	8	4.0
	306/307/308	0.7	23.5	8	3.0	27.5	8	4.0
	310/314/316	0.5	24.5	8	2.5	–	–	–
2K	302	2.0	29.5	10	4.0	32.5	10	5.5
	303	1.6	29.5	10	3.5	32.5	10	5.5
	304/305/306/307	1.3	28.5	10	3.5	30.5	10	4.0
	308/310	0.9	27.5	10	3.0	30.5	10	4.0
	312/314/316/318/319	0.7	27.5	10	3.0	30.5	10	4.0
	326/332	0.5	27.5	10	2.5	–	–	–
3K	302	3.0	37.0	11	4.5	41.0	11	5.5
	303/304	2.0	36.0	11	4.0	40.0	11	5.5
	305/306/307	1.6	36.0	11	3.5	40.0	11	5.5
	308/310	1.3	35.0	11	3.5	38.0	11	4.0
	309	1.3 2.0	35.0	11	3.5 4.0	38.0	11	4.0 5.5
	312/314/316/318	0.9	34.0	11	3.0	38.0	11	4.0
	320/322/324/326/330	0.7	34.0	11	3.0	38.0	11	4.0
4K	304	3.0	45.0	14	4.5	48.0	14	5.5
	306/307	2.0	44.0	14	4.0	48.0	14	5.5
	310	1.6	44.0	14	3.5	48.0	14	5.5
	312	1.3	44.0	14	3.5	48.0	14	4.0
	316/320/324/330	0.9	44.0	14	3.0	46.0	14	4.0
	340/348	0.7	44.0	14	3.0	46.0	14	4.0

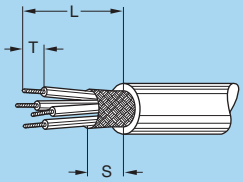

Note: the tolerances on these dim. are: L: ± 0.5 mm; S: ± 0.5 mm; T: ± 0.2 mm.

Cable stripping lengths (T series)

M1 **straight plugs and sockets with cable collet, clamping type C (solder or crimp contacts)**

M2 **straight plugs and sockets with cable collet, clamping type K (solder or crimp contacts)**

	Type	ø contact A (mm)	Cable stripping lengths (mm)											
			M1						M2					
			Solder			Crimp			Solder			Crimp		
			L	S	T	L	S	T	L	S	T	L	S	T
TT	302/303/304	0.5	10.0	4.5	2.5	13.5	4.5	3.0	–	–	–	–	–	–
	305	0.35	10.0	4.5	2.5	–	–	–	–	–	–	–	–	–
	306	0.35	11.0	4.5	2.5	–	–	–	–	–	–	–	–	–
0T	302/303	0.9	11.5	6.0	3.0	13.5	6.0	4.0	22.0	7.0	3.0	24.0	7.0	4.0
	304/305	0.7	11.5	6.0	3.0	13.5	6.0	4.0	22.0	7.0	3.0	24.0	7.0	4.0
	306/307/309[1)]	0.5	10.5	6.0	2.5	14.0	6.0	3.0	21.0	7.0	2.5	24.5	7.0	3.0
	312	0.35	10.5	6.0	2.5	–	–	–	21.0	7.0	2.5	–	–	–
1T	302/303	1.3	12.0	8.0	3.5	14.0	8.0	4.0	26.0	8.5	3.5	28.0	8.5	4.0
	304/305	0.9	11.5	8.0	3.0	14.0	8.0	4.0	26.0	8.5	3.0	28.5	8.5	4.0
	306/307/308	0.7	11.5	8.0	3.0	14.0	8.0	4.0	26.0	8.5	3.0	28.5	8.5	4.0
	310/314/316	0.5	11.5	8.0	2.5	15.0	8.0	3.0	25.5	8.5	2.5	29.0	8.5	3.0
2T	302	2.0	16.0	9.5	4.0	19.0	9.5	5.5	30.0	9.0	4.0	33.0	9.0	5.5
	303	1.6	16.0	9.5	3.5	19.0	9.5	5.5	30.0	9.0	3.5	33.0	9.0	5.5
	304/305/306/307	1.3	16.0	9.5	3.5	19.0	9.5	4.0	30.0	9.0	3.5	33.0	9.0	4.0
	308/310	0.9	16.0	9.5	3.0	19.0	9.5	4.0	30.0	9.0	3.0	33.0	9.0	4.0
	312/314/316/318/319	0.7	16.0	9.5	3.0	19.0	9.5	4.0	30.0	9.0	3.0	33.0	9.0	4.0
	326/332	0.5	16.0	9.5	2.5	–	–	–	30.0	9.0	2.5	–	–	–
3T	302	3.0	20.5	11.0	4.5	23.5	11.0	7.0	40.5	13.0	4.5	43.5	13.0	7.0
	303/304	2.0	20.5	11.0	4.0	23.5	11.0	5.5	40.5	13.0	4.0	43.5	13.0	5.5
	305/306/307	1.6	20.5	11.0	3.5	23.5	11.0	5.5	40.5	13.0	3.5	43.5	13.0	5.5
	308/310	1.3	20.5	11.0	3.5	23.5	11.0	4.0	40.5	13.0	3.5	43.5	13.0	4.0
	309	1.3 2.0	20.5	11.0	3.5 4.0	23.5	11.0	4.0 5.5	40.5	13.0	3.5 4.0	43.5	13.0	4.0 5.5
	312/314/316/318	0.9	20.5	11.0	3.0	23.5	11.0	4.0	40.5	13.0	3.0	43.5	13.0	4.0
	320/322/324/326/330/332	0.7	20.5	11.0	3.0	23.5	11.0	4.0	40.5	13.0	3.0	43.5	13.0	4.0

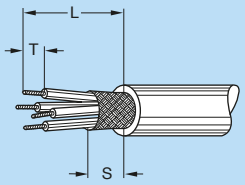

Note:
[1)] crimp contacts are available only for connectors fitted with male contacts. The tolerances on these dim. are: L: ± 0.5 mm; S: ± 0.5 mm; T: ± 0.2 mm.

Cable stripping lengths for unipole connectors (S series)

M1 **straight plugs and sockets with cable collet, clamping type C (solder contacts)**

M3 **elbow plugs (90°) with cable collet, clamping type C (solder contacts)**

M5 **straight plugs and sockets with cable crimping type E (crimp contacts)**

M6 **elbow plugs (90°) with cable crimping type E (crimp contacts)**

	Type	ø contact A (mm)	Cable stripping lengths (mm)											
			M1			M5			M3			M6		
			Solder			Crimp			Solder			Crimp		
			L	S	T	L	S	T	L	S	T	L	S	T
00	113	1.3	9	4	4	19	5	7	7	4	2	17	5	7
0S	116	1.6	11	5	4	–	–	–	8	5	2	–	–	–
1S	120	2.0	13	8	5	–	–	–	13	8	2	–	–	–
	130	3.0	13	8	5	–	–	–	13	8	2	–	–	–
2S	130	3.0	18	9	6	–	–	–	15	9	2	–	–	–
	140	4.0	18	9	6	–	–	–	15	9	2	–	–	–
3S	140	4.0	21	9	7	–	–	–	19	9	2	–	–	–
	160	6.0	21	9	9	–	–	–	19	9	2	–	–	–
4S	140	4.0	25	9	7	–	–	–	23	9	2	–	–	–
	160	6.0	25	9	9	–	–	–	23	9	2	–	–	–
5S	112	12.0	12	15	12	–	–	–	–	–	–	–	–	–

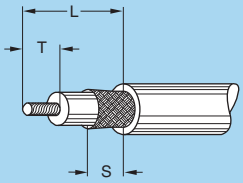

M2 **straight plugs and sockets with oversize cable collet, clamping type K (solder contacts)**

	Type	ø contact A (mm)	Cable stripping lengths (mm)		
			M2		
			Solder		
			L	S	T
00	113	1.3	16	4	4
0S	116	1.6	19	5	4
1S	120	2.0	25	8	5
	130	3.0	25	8	5
2S	130	3.0	34	9	6
	140	4.0	34	9	6
3S	140	4.0	39	9	7
	160	6.0	39	9	9
4S	140	4.0	50	9	7
	160	6.0	50	9	9

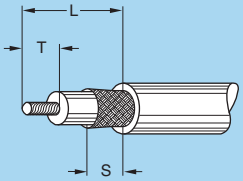

Cable stripping lengths for multipole connectors (S series)

M1 **straight plugs and sockets with cable collet, clamping type C (solder or crimp contacts)**

M3 **elbow plugs (90°) with cable collet, clamping type C (solder or crimp contacts)**

	Type	ø contact A (mm)	Cable stripping lengths (mm)											
			M1						M3					
			Solder			Crimp			Solder			Crimp		
			L	S	T	L	S	T	L	S	T	L	S	T
0S	302	0.9	10.0	5	3.5	15	5	4.0	10.0	5	3.5	15	5	4.0
	303/304	0.7	10.0	5	3.5	15	5	4.0	10.0	5	3.5	15	5	4.0
1S	302	1.3	12.5	8	3.5	17	8	4.0	14.5	8	3.5	17	8	4.0
	303/304	0.9	12.0	8	3.0	17	8	4.0	14.0	8	3.0	17	8	4.0
	305	0.9 0.7	12.0	8	3.0	17	8	4.0	14.0	8	3.0	17	8	4.0
	306	0.7	12.5	8	3.0	17	8	4.0	14.5	8	3.0	17	8	4.0
2S	302	1.6	17.0	9	3.5	22	9	5.5	17.0	9	3.5	22	9	5.5
	303/304/305/306	1.3	17.5	9	3.5	22	9	4.0	17.5	9	3.5	22	9	4.0
	307	1.3 0.9	17.5	9	3.5 3.0	22	9	4.0	17.5	9	3.5 3.0	22	9	4.0
	308/310	0.9	17.0	9	3.0	22	9	4.0	17.0	9	3.0	22	9	4.0
3S	302/303/304	2.0	20.0	9	4.0	–	–	–	–	–	–	–	–	–
	305	2.0 1.3	20.0	9	4.0 3.5	–	–	–	–	–	–	–	–	–
	306/307/308/310	1.3	20.5	9	3.5	–	–	–	–	–	–	–	–	–
	312/313/314/316/318	0.9	20.0	9	3.0	–	–	–	–	–	–	–	–	–
4S	302	4.0	25.0	9	7.0	–	–	–	–	–	–	–	–	–
	303/304	3.0	23.5	9	4.5	–	–	–	–	–	–	–	–	–
	305	3.0 2.0	23.5	9	4.5 4.0	–	–	–	–	–	–	–	–	–
	306	2.0	21.0	9	4.0	–	–	–	–	–	–	–	–	–
	307	2.0 1.3	21.0	9	4.0 3.5	–	–	–	–	–	–	–	–	–
	308/309/310/312/313/314	1.3	24.5	9	3.5	–	–	–	–	–	–	–	–	–
	316/318/320/322/324	0.9	24.5	9	3.5	–	–	–	–	–	–	–	–	–

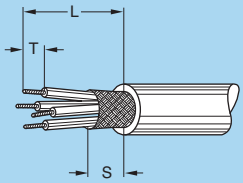

Cable stripping lengths for multipole connectors (S series)

M1 **straight plugs and sockets with cable collet, clamping type C (solder contacts)**

M3 **elbow plugs (90°) with cable collet, clamping type C (solder contacts)**

	Type	ø contact A (mm)	Cable stripping lengths (mm)					
			M1			M3		
			Solder			Solder		
			L	S	T	L	S	T
5S	302	6.0	33.5	22	7.5	33.5	22	7.5
	303	6.0 4.0	33.5	22	7.5 5.5	33.5	22	7.5 5.5
	304	4.0	33.5	22	5.5	33.5	22	5.5
	305	4.0 3.0	33.5	22	5.5 4.5	33.5	22	5.5 4.5
	306/308	3.0	33.5	22	4.5	33.5	22	4.5
	310/312/316	2.0	32.0	22	4.0	32.0	22	4.0
	314	3.0 2.0	33.5	22	4.5 4.0	33.5	22	4.5 4.0
	318/322	3.0 1.6	33.5	22	4.5 3.5	33.5	22	4.5 3.5
	320/324	1.6	34.0	22	3.5	34.0	22	3.5
	330/336/340/344/348	1.3	34.5	22	3.5	34.5	22	3.5
6S	304	8.0	37.0	15	10.0	37.0	15	10.0
	312/318	4.0	37.0	15	7.0	37.0	15	7.0
	320/324	3.0	37.0	15	6.0	37.0	15	6.0
	330/336/348	2.0	37.0	15	7.0	37.0	15	7.0
	360	1.6	37.0	15	4.5	37.0	15	4.5
	364/372	1.3	37.0	15	4.0	37.0	15	4.0
	106	0.9	37.0	15	4.0	37.0	15	4.0

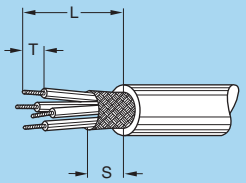

M4 **straight plug with cable collet, clamping type D or M (solder or crimp contacts)**

	Type	ø contact A (mm)	Cable stripping lengths (mm)					
			M4					
			Solder			Crimp		
			L	S	T	L	S	T
2S	302	1.6	47.0	9	3.5	52	9	5.5
	303/304/305/306	1.3	47.5	9	3.5	52	9	4.0
	307	1.3 0.9	47.5	9	3.5 3.0	52	9	4.0
	308/310	0.7	47.0	9	3.0	52	9	4.0

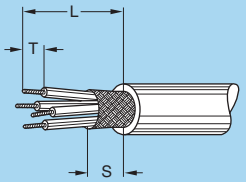

Cable stripping lengths for multipole connectors (S series)

M2 **straight plugs and sockets with oversize cable collet, clamping type K (solder or crimp contacts)**

	Type	ø contact A (mm)	Cable stripping lengths (mm) M2 Solder L	Solder S	Solder T	Crimp L	Crimp S	Crimp T
0S	302	0.9	19.5	5	3.5	23	5	4.0
	303/304	0.7	20.0	5	3.5	23	5	4.0
1S	302	1.3	24.5	8	3.5	28	8	4.0
	303/304	0.9	24.0	8	3.0	28	8	4.0
	305	0.9 0.7	24.0	8	3.0	28	8	4.0
	306	0.7	24.5	8	3.0	28	8	4.0
2S	302	1.6	33.0	9	3.5	38	9	5.5
	303/304/305/306	1.3	33.5	9	3.5	38	9	4.0
	307	1.3 0.9	33.5	9	3.5 3.0	38	9	4.0
	308/310	0.9	33.0	9	3.0	38	9	4.0
3S	302/303/304	2.0	38.0	9	4.0	–	–	–
	305	2.0 1.3	38.0	9	4.0 3.5	–	–	–
	306/307/308/310	1.3	38.5	9	3.5	–	–	–
	312/313/314/316/318	0.9	38.0	9	3.0	–	–	–
4S	302	4.0	50.0	9	7.0	–	–	–
	303/304	3.0	48.5	9	4.5	–	–	–
	305	3.0 2.0	48.5	9	4.5 4.0	–	–	–
	306	2.0	49.0	9	4.0	–	–	–
	307	2.0 1.3	49.0	9	4.0 3.5	–	–	–
	308/309/310/312/313/314	1.3	49.5	9	3.5	–	–	–
	316/318/320/322/324	0.9	49.0	9	3.0	–	–	–
5S	302	6.0	68.5	22	7.5	–	–	–
	303	6.0 4.0	68.5	22	7.5 5.5	–	–	–
	304	4.0	68.5	22	5.5	–	–	–
	305	4.0 3.0	68.5	22	5.5 4.5	–	–	–
	306/308	3.0	68.5	22	4.5	–	–	–
	310/312/316	2.0	67.0	22	4.0	–	–	–
	314	3.0 2.0	68.5	22	4.5 4.0	–	–	–
	318/322	3.0 1.6	68.5	22	4.5 3.5	–	–	–
	320/324	1.6	69.0	22	3.5	–	–	–
	330/336/340/344/348	1.3	69.5	22	3.5	–	–	–

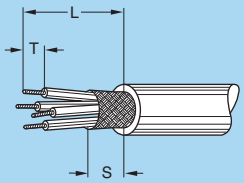

Cable stripping lengths for unipole connectors (E series)

M1 **straight plugs and sockets with cable collet, clamping type C (solder contacts)**

M3 **elbow plugs (90°) with cable collet, clamping type C (solder contacts)**

	Type	ø contact A (mm)	Cable stripping lengths (mm)					
			M1			**M3**		
			Solder			Solder		
			L	S	T	L	S	T
0E	**116**	1.6	9	5	4	20	5	4
1E	**120**	2.0	12	8	5	25	8	5
	130	3.0	13	8	5	25	8	5
2E	**130**	3.0	16	9	6	33	9	6
	140	4.0	15	9	6	33	9	6
3E	**140**	4.0	19	9	7	40	9	7
	160	6.0	20	9	9	40	9	9
4E	**160**	6.0	23	9	9	50	9	9
5E	**112**	12.0	12	15	12	–	–	–

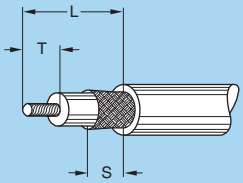

M2 **straight plugs and sockets with oversize cable collet, clamping type K (solder contacts)**

	Type	ø contact A (mm)	Cable stripping lengths (mm)		
			M2		
			Solder		
			L	S	T
1E	**120**	2.0	25	8	5
	130	3.0	26	8	5
2E	**130**	3.0	28	9	6
	140	4.0	27	9	6
3E	**140**	4.0	36	9	7
	160	6.0	37	9	9
4E	**160**	6.0	50	9	9

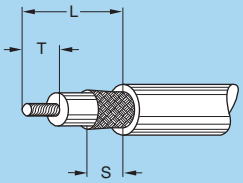

Cable stripping lengths for multipole connectors (E series)

M1 **straight plugs and sockets with cable collet, clamping type C (solder or crimp contacts)**

M3 **elbow plugs (90°) with cable collet, clamping type C (solder or crimp contacts)**

	Type	ø contact A (mm)	Cable stripping lengths (mm)											
			M1						M3					
			Solder			Crimp			Solder			Crimp		
			L	S	T	L	S	T	L	S	T	L	S	T
0E	302	0.9	9.0	4	3.5	12	5	4.0	19.5	5	3.5	23	5	4.0
	303/304	0.7	9.0	4	3.5	12	5	4.0	19.0	5	2.5	23	5	4.0
1E	302	1.3	10.5	6	3.5	15	8	4.0	23.5	8	3.5	28	8	4.0
	303/304	0.9	10.5	6	3.0	15	8	4.0	23.0	8	3.0	28	8	4.0
	305	0.9 0.7	10.5	6	3.0	15	8	4.0	23.0	8	3.0	28	8	4.0
	306	0.7	10.5	6	3.0	15	8	4.0	23.5	8	3.0	28	8	4.0
2E	302	1.6	14.0	9	3.5	19	9	5.5	32.0	9	3.5	37	9	5.5
	303/304/305/306	1.3	14.5	9	3.5	19	9	4.0	32.5	9	3.5	37	9	4.0
	307	1.3 0.9	14.5	9	3.5 3.0	19	9	4.0	32.5	9	3.5 3.0	37	9	4.0
	308/310	0.9	14.0	9	3.0	19	9	4.0	32.0	9	3.0	37	9	4.0
3E	302/303/304	2.0	17.0	9	4.0	–	–	–	38.0	9	4.0	–	–	–
	305	2.0 1.3	17.0	9	4.0 3.5	–	–	–	38.0	9	4.0 3.5	–	–	–
	306/307/308/310	1.3	17.5	9	3.5	–	–	–	38.5	9	3.5	–	–	–
	312/313/314/316/318	0.9	17.0	9	4.0	–	–	–	38.0	9	3.0	–	–	–
4E	302	4.0	23.0	9	7.0	–	–	–	50.0	9	7.0	–	–	–
	303/304	3.0	21.5	9	4.5	–	–	–	48.5	9	4.5	–	–	–
	305	3.0 2.0	21.5	9	4.5 4.0	–	–	–	48.5	9	4.5 4.0	–	–	–
	306	2.0	22.0	9	4.0	–	–	–	49.0	9	4.0	–	–	–
	307	2.0 1.3	22.0	9	4.0 3.5	–	–	–	49.0	9	4.0 3.5	–	–	–
	308/309/310/312/313/314	1.3	22.5	9	3.5	–	–	–	49.5	9	3.5	–	–	–
	316/318/320/322/324	0.9	22.0	9	4.0	–	–	–	49.0	9	3.0	–	–	–
5E	302	6.0	46.5	15	7.5	–	–	–	–	–	–	–	–	–
	303	6.0 4.0	46.5	15	7.5 5.5	–	–	–	–	–	–	–	–	–
	304	4.0	46.5	15	5.5	–	–	–	–	–	–	–	–	–
	305	4.0 3.0	46.5	15	5.5 4.5	–	–	–	–	–	–	–	–	–
	306/308	3.0	46.5	15	4.5	–	–	–	–	–	–	–	–	–
	310/312/316	2.0	45.0	15	4.0	–	–	–	–	–	–	–	–	–
	314	3.0 2.0	45.5	15	4.5 4.0	–	–	–	–	–	–	–	–	–
	318/322	3.0 1.6	45.5	15	4.5 3.5	–	–	–	–	–	–	–	–	–
	320/324	1.6	47.0	15	3.5	–	–	–	–	–	–	–	–	–
	330/336/340/344/348	1.3	47.5	15	3.5	–	–	–	–	–	–	–	–	–

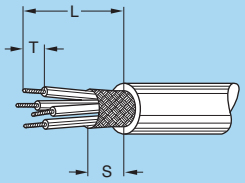

Cable stripping lengths for multipole connectors (E series)

M1 **straight plugs and sockets with cable collet, clamping type C (solder contacts)**

M3 **elbow plugs (90°) with cable collet, clamping type C (solder contacts)**

	Type	ø contact A (mm)	Cable stripping lengths (mm)					
			M1			M3		
			Solder			Solder		
			L	S	T	L	S	T
6E	303	6.0	70	30	9.0	–	–	–
	304	8.0	70	30	10.0	–	–	–
	312	5.0	70	30	8.0	–	–	–
	316/320/324	3.0	70	30	6.0	–	–	–
	330/332/340/348	2.0	70	30	7.0	–	–	–
	336	1.3 5.0	70	30	4.0 8.0	–	–	–
	360/362	1.6	70	30	4.5	–	–	–
	364/372	1.3	70	30	4.0	–	–	–
	106	0.9	70	30	4.0	–	–	–

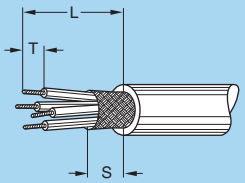

M2 **straight plugs and sockets with oversize cable collet, clamping type K (solder or crimp contacts)**

	Type	ø contact A (mm)	Cable stripping lengths (mm)					
			M2					
			Solder			Crimp		
			L	S	T	L	S	T
1E	302	1.3	23.5	8	3.5	28	8	4.0
	303/304	0.9	23.0	8	3.0	28	8	4.0
	305	0.9 0.7	23.0	8	3.0	28	8	4.0
	306	0.7	23.5	8	3.0	28	8	4.0
2E	302	1.6	26.0	9	3.5	31	9	5.5
	303/304/305/306	1.3	26.5	9	3.5	31	9	4.0
	307	1.3 0.9	26.5	9	3.5 3.0	31	9	4.0
	308/310	0.9	26.0	9	3.0	31	9	4.0
3E	302/303/304	2.0	34.0	9	4.0	–	–	–
	305	2.0 1.3	34.0	9	4.0 3.5	–	–	–
	306/307/308/310	1.3	34.5	9	3.5	–	–	–
	312/313/314/316/318	0.9	34.0	9	3.0	–	–	–
4E	302	4.0	50.0	9	7.0	–	–	–
	303/304	3.0	48.5	9	4.5	–	–	–
	305	3.0 2.0	48.5	9	4.5 4.0	–	–	–
	306	2.0	49.0	9	4.0	–	–	–
	307	2.0 1.3	49.0	9	4.0 3.5	–	–	–
	308/309/310/312/313/314	1.3	49.5	9	3.5	–	–	–
	316/318/320/322/324	0.9	49.0	9	3.0	–	–	–

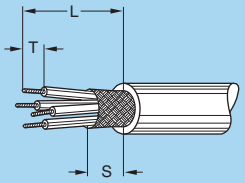

Technical characteristics

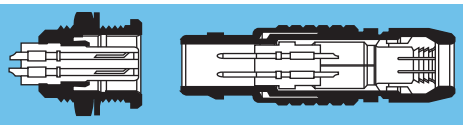

Outer shell

Brass

In most cases, LEMO connectors have a brass outer shell which is suitable for most general purpose applications, including civilian and military. The brass outer shells have a chrome nickel-plated surface which ensures very good protection against industrial atmosphere, salt air and most corrosive agents.

Alternative protective coatings are available to satisfy other specific environmental conditions:
– electrolytic nickel
– nickel-gold
– nickel-black chrome. After the black chrome treatment, the part is coated with non conductive protective organic film.

Stainless steel

For applications where there are severe environmental conditions that may rapidly damage the surface finish, we recommend using stainless steel. The AISI 303 stainless steel is a material for general use adapted to most applications requiring a product made entirely of stainless metal.

For the nuclear industry where elements are subject to radiation and to vaporous nitric acid, we offer AISI 304 stainless steel.

Grade AISI 316L is recommended for medical applications, highly demanding with regard to non-corrosiveness. This material is also used for connector shells soldered by electronic beam onto a device made of the same stainless steel. These parts have no surface treatment.

Aluminium alloy

The aluminium alloy outer shells find numerous applications where light weight is a predominant factor; such as in the aeronautics and space industries, and for portable and mobile equipment.
These materials have high mechanical strength and excellent resistance to corrosion. The shell surface is protected by anodizing which is available in six colours: blue, yellow, black, red, green, and natural.

Plastic materials

Some connector model shells can be made of plastic. This solution offers optimum electrical insulating properties particularly suitable for medical applications. Black Polyoxymethylene (POM) is particularly adapted to products of the 00 or S series.
Grey or white polysulfone (PSU) and beige PEEK offers excellent mechanical properties and is suitable for gas or vapour sterilization.
Some models of the 2B and 3B series are available with an outer shell of cream-coloured polyphenylsulfone (PPSU). We recommend this material particularly for applications where products are to withstand hundreds of vapour sterilization cycles.

Bridge plug or plugs with parallel sockets are made of polyamide (PA.6) available in 9 colours: blue, white, grey, yellow, brown, black, red, orange and green.

Some elbow socket shells for printed circuits are overmoulded in polyphenilene sulfide (PPS).

Other metallic components

In general, most metallic components are manufactured in brass. However, bronze or beryllium copper are used where good elasticity is required (for example: earthing crown). Depending on the application, these parts have electrolytic nickel or nickel-gold plating.
These parts can also be manufactured in stainless steel.

Sealing gasket

In general, sealing gaskets are made of silicone rubber MQ/MVQ. However, for vacuumtight sockets and couplers, gaskets are made of fluorosilicone rubber (FPM).

Sealing resin

An epoxy resin is used to seal both watertight and vacuumtight socket and coupler models.

Materials and Treatments

Component	Material (Standard)	Surface treatment (μm)										Notes
		chrome			nickel		gold			black chr.		
		Cu	Ni	Cr	Cu	Ni	Cu	Ni	Au	Ni	Cr	
Outer shell, collet nut, conical nut or notched nut and oversized collet	Brass (UNS C 38500)	0.5	3	0.3	0.5	3	0.5	3	0.5	1	2	
	Stainless steel (AISI 303, 304 or 316L)	without treatment										
	Aluminium alloy (AA 6262A or AA 6023)	–	–	–	–	5	–	–	–	–	–	1)
	Aluminium alloy (AA 6262A or AA 6023)	anodized										
	POM (Delrin® or Ertacetal®), Polyoxymethylene, black	–										2)
	PEEK, Polyether ethercetone, beige	–										3)
	PSU (Udel®), Polysulfone, grey or white	–										4)
	PPSU (Radel®), Polyphenylsulfone, cream	–										4)
	PA.6 (Grilon®), Polyamid	–										5)
	PPS (Ryton®), Polyphenilene sulfide, brown	–										6)
Earthing crown	Bronze (UNS C 54400) or special brass	–	–	–	0.5	3	0.5	3	1.0	–	–	7)
	Beryllium Copper (UNS C 17300)	–	–	–	0.5	3	0.5	3	1.0	–	–	8)
	Stainless steel (AISI 416 or 316L)	without treatment										9)
Latch sleeve	Special brass	0.5	3	0.3	0.5	3	0.5	3	0.5	–	–	
	Stainless steel (AISI 416 or 316L)	without treatment										9)
Locking washer	Bronze (UNS C 52100)	–	–	–	0.5	3	0.5	3	0.5	–	–	
Hexagonal or round nut	Brass (UNS C 38500)	–	–	–	0.5	3	0.5	3	0.5	–	–	
	Stainless steel (AISI 303, 304 or 316L)	without treatment										10)
	Aluminium alloy (AA 6262A or AA 6023)	anodized natural										10)
Other metallic components	Brass (UNS C 38500)	–	–	–	0.5	3	0.5	3	0.5	–	–	
	Stainless steel (AISI 303, 304 or 316L)	without treatment										
O-ring and gaskets	Silicone MQ/MVQ or FPM/FKM (Viton®)	–										11)
Sealing resin	Epoxy (Araldite® or Stycast®)	–										

Notes: standards for surface treatment are as follows:
– chrome-plated: SAE AMS 2460
– nickel-plated: SAE AMS QQ N 290, or MIL DTL 32119
– gold-plated: ISO 27874
– black chrome: MIL DTL 14538 with a minimum of 10 μm of lacquer protection
1) anthracite colour (other colours upon request)
2) for FFP, PCP and ERN models of the 0S to 3S series
3) for FFP, PCP and ERN models of the 0S to 3S series and FGG and ENG models of the 1B, 3B and 4B series
4) for the FGY and ENY models of the 2B and 3B series
5) for bridge plugs of the B series
6) for S and B series elbow sockets for printed circuits
7) gold-plating for unipole types
8) used in 00 series free and fixed sockets and couplers
9) AISI 416 steel is used with shells made of AISI 303 or 304
10) delivered with free and fixed sockets with aluminium alloy or stainless steel shell
11) FPM/FKM (Viton®) o-ring and gaskets are installed upon special request. However standard for vacuumtight models.

Technical characteristics of plastic materials

Type	Standard	Units	POM	PEEK	PSU	PPSU	PPS	PA.6	Silicone	FPM	Epoxy
Density	ASTM D 792	–	1.4	1.3-1.4	1.24	1.3	1.67	1.14	~1.2	~1.9	1.58
Tensile strength (at 23°C)	ASTM D 638/ ISO R527	MPa	70-80	92-142	70	70	121	55	> 9	> 12	16
Flexurale strength (at 23°C)	ASTM D 790/ ISO R178	MPA	–	170	106	91	179	75	–	–	24
Dielectric strength	ASTM D 149/IEC 60243	kV/mm	60	19-25	17-20	15	17	35	18-30	–	15
Volume resis. at 50% HR and 23°C	ASTM D 257/IEC 60093	Ω • cm	10^{15}	10^{16}	$5x10^{16}$	–	10^{16}	10^{15}	10^{14}	–	10^{14}
Surface resistivity	ASTM D 257	Ω	10^{13}	10^{15}	–	–	–	–	–	–	–
Thermal conductivity	ASTM C 177	W/K • m	0.31	0.25	0.26	–	0.3	–	–	–	0.8
Comparative tracking index	IEC 60112	V	CTI 600	CTI 150	CTI 150	–	CTI 200	CTI 600	–	–	CTI>600
Maxi. continuous service temperature	UL 746	°C	90	250	140	180	220	80	200	200	80
Min. continuous service temperature	UL 746	°C	-50	-55	-60	-50	-60	-40	-50	-20	-20
Max. short-time service temperature	–	°C	140	300	160	200	250	150	> 250	300	120
Water absorption in 24h at 23°C	ASTM D 570/ISO R62A	%	0.85	0.12	0.3	0.37	< 0.05	> 3	–	–	0.25
Radiation resistance	–	Gy[1)]	$8x10^3$	10^7	10^5	–	> 10^7	$5x10^3$	10^5	$8x10^4$	$2x10^6$
Flammability rating	ASTM D 635/UL 94	–	HB	V-0/1.5	V-0/4.4	V-0/1.6	V-0/5V	V-2	–	–	V-0/4
Resistance to steam sterilization	–	–	bad	excel.	good	excel.	excel.	bad	good	good	bad

Notes: [1)] 1 Gy (Gray) = 100 rad.

ASTM = American Society for Testing Material
ISO = International Standards Organisation
UL = Underwriters Laboratories
IEC = International Electrotechnical Commission

Mechanical latching characteristics

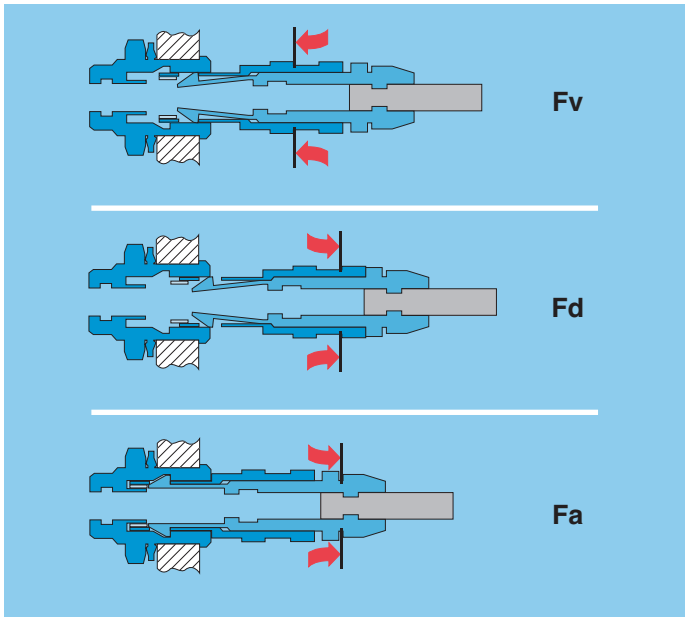

F_v: average latching force.

F_d: average unmating force with axial pull on the outer shell.

F_a: average pull force with axial pull on the collet nut

Notes: forces were measured on outer shells **not fitted with contacts**.
Mechanical endurance: 5000 cycles (3000 cycles for T series).
The values were measured according to the standard IEC 60512-7 test 13a.

1N = 0.102 kg.

Standard series

Force (N)	Series							
	00	0S	1S	2S	3S	4S	5S	6S
Fv	9	14	15	17	20	40	60	70
Fd	7	9	10	11	14	25	40	55
Fa	120	140	250	350	500	650	750	900

Watertight series

Force (N)	Series						
	0E	1E	2E	3E	4E	5E	6E
Fv	14	16	20	32	65	85	100
Fd	9	10	13	25	40	60	75
Fa	250	300	400	550	700	800	900

Keyed series

Force (N)	Series						
	00	0B	1B	2B	3B	4B	5B
Fv	9	10	14	15	17	39	48
Fd	7	8	11	12	14	38	38
Fa	100	180	300	300	400	600	800

Keyed watertight series

Force (N)	Series										
	TT	0K	0T	1K	1T	2K	2T	3K	3T	4K	5K
Fv	14	14	15	16	16	20	20	32	28	65	85
Fd	12	9	13	10	14	13	15	25	24	40	60
Fa	80	250	130	300	250	400	250	550	400	700	800

Electromagnetic compatibility (EMC) and shielding efficiency

The electromagnetic compatibility of a device can only be ensured by meeting a number of basic rules with the design of the device and by carefully selecting components, cables and connectors.

Electrical and electronic devices are to be designed to ensure the following:

a) reduce the emission of generated electromagnetic disturbance to a level where radios and telecommunication and other devices can properly function;
b) electromagnetic immunity against electromagnetic disturbance so that they can properly function.

When selecting a connector, screen or shielding efficiency and low resistance to electric continuity between the cable and the connector should be considered.

The design of LEMO connectors with metal shell and earthing crown guarantee optimum shielding efficiency in all applications where electromagnetic compatibility (EMC) is critical. The performance of a connector is measured through shielding efficiency, a value that represents the ratio between the electromagnetic field on the outside and the inside of the shell. Our measurements are carried out according to the IEC 60169-1-3 standard.

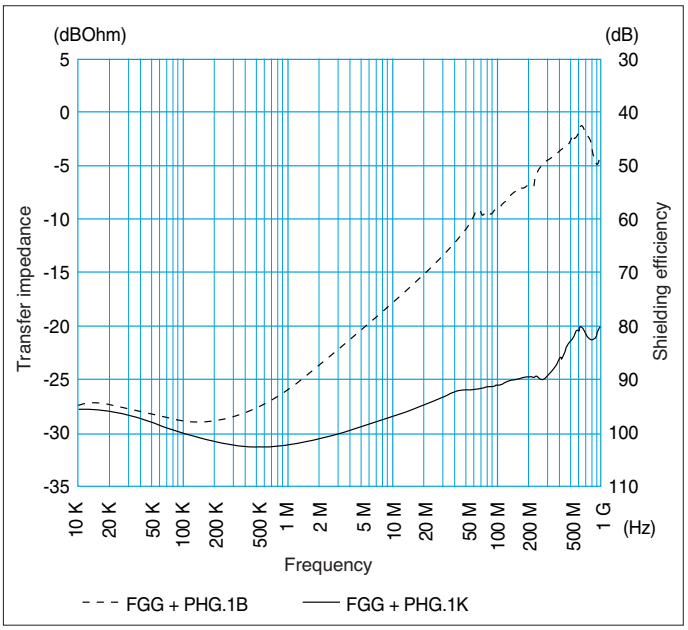

The performance of S and B series connectors is comparable to the results of measurements carried out on a pair of FGG + PHG.1B connectors.
The performance of E and K series connectors is comparable to the results of measurements carried out on a pair of FGG + PHG.1K connectors.

Shell electrical continuity:
(measured according to IEC 60512-2 test 2f)

Test current: 1A
A = Ammeter
mV = Millivoltmeter
G = Generator

R_1 Values with earthing crown and latch sleeve or inner-sleeve nickel-plated.

R_2 Values with gold-plated earthing crown and nickel-plated latch sleeve or inner sleeve.

Standard series

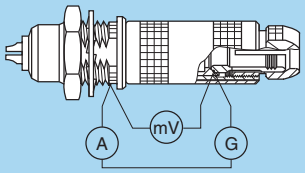

Series	R_1 (mΩ)	R_2 (mΩ)
00	3.5	2.8
0S	2.8	1.6
1S	2.2	1.5
2S	1.8	1.2

Series	R_1 (mΩ)	R_2 (mΩ)
3S	1.6	1.2
4S	1.4	1.0
5S	1.4	1.0
6S	1.0	0.5

Keyed series

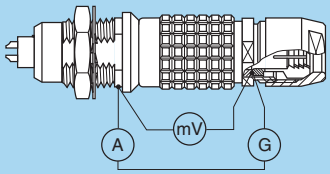

Series	R_1 (mΩ)	R_2 (mΩ)
00	3.5	2.8
0B	3.5	1.3
1B	2.5	1.1
XB	2.5	1.1
2B	2.2	0.9
3B	2.2	0.7
4B	1.5	0.5
5B	1.5	0.3

Series	R_1 (mΩ)
TT	3.5
0T	3.5
1T	2.5
2T	2.2
3T	2.2
4T	1.5
5T	1.5

Watertight series
Keyed watertight series

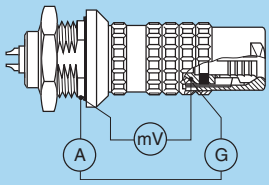

Series	R_1 (mΩ)	R_2 (mΩ)
0E-0K	2.8	1.6
1E-1K	2.2	1.5
2E-2K	1.8	1.2
3E-3K	1.6	1.2
4E-4K	1.4	1.0
5E-5K	1.4	1.0
6E	1.0	0.5

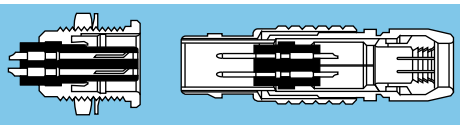

Insulator

Plastic material used by LEMO for manufacturing insulators is selected according to the electric and thermal properties required for the various connector types.
Characteristics examined for the two connector types are: Dielectric strength, Comparative tracking index, Surface and volume resistivity, Radiation resistance, Continuous service temperature, Water absorption, Flammability rating, Resistance to hydrocarbon.

Mechanical and Electrical Properties

Mechanical characteristics of thermoplastics, such as PA 6.6, and PEEK, are improved by the addition of glass fibres. By adding glass fibres in the resin the performance of this material (mechanical strength and radiation resistance) is enhanced and water absorption rate is reduced. From an electric point of view, the addition of glass fibres improves dielectric strength.

Selection of the insulator

A number of thermoplastics have common characteristics, some of them are identical with other insulating materials. In this case, the insulator material is selected according to the specific difference in features to provide all the required parameters for the given type.

Radiation resistance

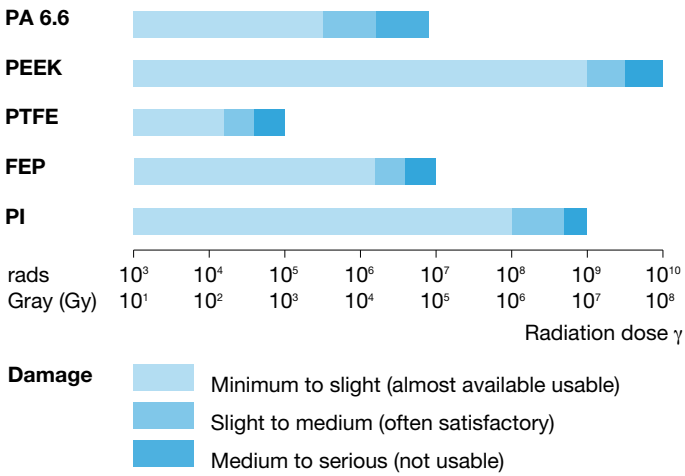

Note: technical data in this chapter provide general information on plastics used by LEMO as electrical insulators. LEMO reserves the right to propose new materials with better technical characteristics, and to withdraw, without notice, any material mentioned in the present catalogue or any other publications edited by LEMO S.A. and/or its subsidiaries. LEMO SA and its subsidiaries use only plastic granules, powder or bars supplied by specialized companies, and thus cannot in any case take responsibility with regard to this material.

Technical characteristics

Type	Standard	Units	PA6.6	PEEK	PTFE	FEP	PI
Dielectric strength	ASTM D 149 / IEC 60243	kV/mm	15-17	19-25	17.2-24	20	22
Volume resistivity at 50% RH and 23°C	ASTM D 257 / IEC 60093	Ω • cm	$5.8x10^{15}$	10^{16}	10^{18}	> 10^{16}	> 10^{16}
Surface resistivity	ASTM D 257 / IEC 60093	Ω	10^{12}	10^{15}	10^{17}	> 10^{16}	> 10^{15}
Thermal conductivity	ASTM C 177	W/K • m	0.21	0.25	0.23	0.24	0.35
Comparative tracking index	IEC 60112	V	CTI 600	CTI 150	CTI 500	–	–
Dielectric constant (10^6 Hz)	ASTM D 150 / IEC 60250	–	4	3.2-3.5	2-2.1	2.1	3.6
Dissipation factor (10^6 Hz)	ASTM D 150 / IEC 60250	–	–	< 0.005	< 0.0003	< 0.001	< 0.0034
Maximum continuous service temperature	UL 746	°C	120	250	260	200	350
Maximum short-time service temperature	–	°C	150	300	300	260	480
Minimum continuous service temperature	–	°C	–	-55	-200	-200	–
Water absorption in 24h at 23°C	ASTM D 570 / ISO R624	%	< 0.7	< 0.3	< 0.01	< 0.01	0.24
Radiation resistance	–	Gy	$5x10^3$	10^7	$2x10^2$	$2x10^4$	10^6
Flammability rating	ASTM D 635 / UL 94	–	–	V-0/1.5	V-0	V-0	–

Designation		Symbol	Standard	Unipole			Multipole					
chemical	commercial			00	S	E	00	S	E	B	K	T
Polyamide (glass fitted)	Nylatron®	PA 6.6	–					●	●			
Polyether Ethercetone	Peek®	PEEK	–	○	○	○	●	●	●	●	●	●
Polytetrafluorethylene	–	PTFE	ASTM D 1457-83	●	●	●						
Tetrafluorethylene	–	FEP	ASTM D 2116-81					○	○			
Polyimide	Vespel®	PI	–					○	○			

Note: values of insulation resistance between contacts are given on page 189.

● First choice alternative ○ Special order alternative

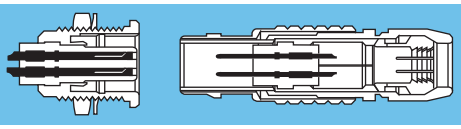

Electrical contact

Technical description

The secure reliable electromechanical connection achieved with LEMO female cylindrical contacts is mainly due to two important design features :

1. *Prod proof entry* on the mating side which ensures perfect concentric mating even with carelessly handled connectors.
2. *The pressure spring*, with good elasticity, maintains a constant even force on the male contact when mated. The leading edge of the pressure spring preserves the surface treatment (gold-plated) and prevents undue wear.

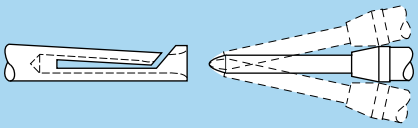

Contact material and treatment

LEMO female contacts are made of bronze beryllium (QQ-C-530) or bronze (UNS C 54400). These materials are chosen because of their high modulus of elasticity, their excellent electrical conductivity and a high mechanical strength.

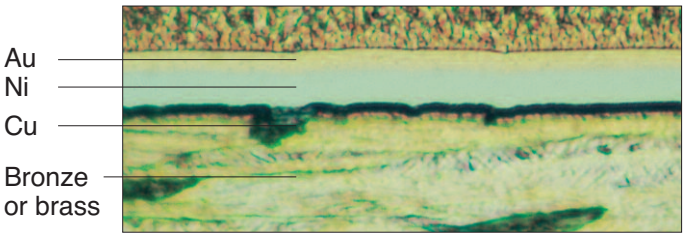

Notes: the standard surface treatment are as follows:
– nickel: SAE AMS QQ N 290 or MIL DTL 32119
– gold: ISO 27874.
1) minimum value
2) for elbow print contacts
3) treatment completed by 6 μm Sn (lead free) tin-plating

LEMO male solder and print contacts are made of brass (UNS C 38500). Male crimp contacts are made of brass (UNS C 34500) or annealed brass (UNS C 38500) with optimum hardness (HV) for crimping onto the wire.

Type	Material (standard)	Surf. treatment (μm)		
		Cu	Ni	Au[1]
Male crimp	Brass (UNS C 34500)	0.5	3	1.0
	Brass (UNS C 38500)	0.5	3	1.0
Male print	Brass (UNS C 38500)	0.5	3	1.0
Female crimp / print	Bronze (UNS C 54400) Cu-Be (FS QQ-C-530)	0.5	3	1.5
Clips	Cu-Be (FS QQ-C-530)	–	–	–
	Stainless steel	–	–	–
Connection wire[2]	Brass	–	3[3]	–

Thickness comparison between the outside and the inside of female contacts

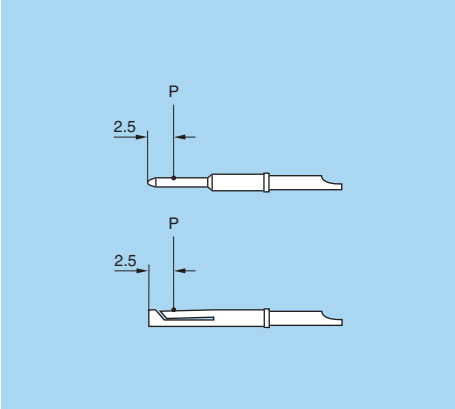

Note: P = inspection point

Contact ø A (mm)	Gold thickness		
	male (μm)	female	
		outside (μm)	inside (%)
0.35	1.0	1.5	65
0.50	1.0	1.5	65
0.70	1.0	1.5	70
0.90	1.0	1.5	75
1.30	1.0	1.5	75
1.60	1.0	1.5	75
2.00	1.0	1.5	75

Contact ø A (mm)	Gold thickness		
	male (μm)	female	
		outside (μm)	inside (%)
3.00	1.0	1.5	75
4.00	1.0	1.5	75
5.00	1.0	1.5	75
6.00	1.0	1.5	75
8.00	1.0	1.5	75
12.00[1]	–	–	–

Notes: 1) contacts are silver plated

Contact resistance with relation to the number of mating cyles
(measured according to IEC 60512-2 test 2a)

Average values measured after the mating cycles and the salt spray test according to IEC 60512-6 test 11f.

A ø (mm)	Contact resistance (mΩ)			A ø (mm)	Contact resistance (mΩ)		
	1000 cycles	3000 cycles	5000 cycles		1000 cycles	3000 cycles	5000 cycles
0.35	8.0	–	–	3.0	2.0	2.2	3.1
0.5	7.5	8.3	8.7	4.0	1.6	2.0	2.8
0.7	5.6	5.7	6.1	5.0	1.4	–	–
0.9	4.1	4.2	4.8	6.0	1.2	–	–
1.3	2.8	2.9	3.6	8.0	0.8	–	–
1.6	2.9	3.1	3.5	12.0	0.7	–	–
2.0	2.6	2.7	3.3				

Insulation resistance between the contacts and contact/shell

(measured according to IEC 60512-2 test 3a)

Insulating material	Multipole	Unipole
	PEEK	PTFE
new	$> 10^{12}$ Ω	$> 10^{12}$ Ω
after humidity test[1)]	$> 10^{10}$ Ω	$> 10^{10}$ Ω

Note: [1)] 21 days at 95% RH according to IEC 60068-2-3.

Solder contacts

The conductor bucket of these contacts is machined at an angle to form a cup into which the solder can flow.
See page 8 for the range of cable dimensions that can be soldered.

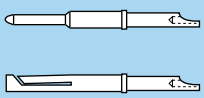

Crimp contacts

The square form crimp method is used (MIL-C-22520F, class I, type 2) photo 1 for unipole contacts.

For multipole contacts the standard four identer crimp method is used, MIL-C-22520F, class I, type 1), photo 2.
The crimp method requires a controlled compression to obtain a symmetrical deformation of the conductor strand and of the contact material. The radial hole in the side of the contact makes it possible to check whether the conductor is correctly positioned within the contact. A good crimping is characterized by only slightly reduced conductor section and practically no gap.
For optimum crimping of bronze or brass contacts they are annealed to relieve internal stress and reduce material hardening during the crimping process.
Only the crimping zone is annealed with the help of an induction heating machine designed by the LEMO Research and Development Department (see photo 3).

Advantages of crimping

- practical, quick contact fixing outside the insulator
- possible use at high temperature
- no risk of heating the insulator during the conductor-contact fixing
- high tensile strength

Crimp contacts are available in standard version (form 1) for mounting maximum size conductors.
For some dimensions, these crimp contacts can be produced with reduced crimp barrels (form 2) for mounting reduced size conductors.

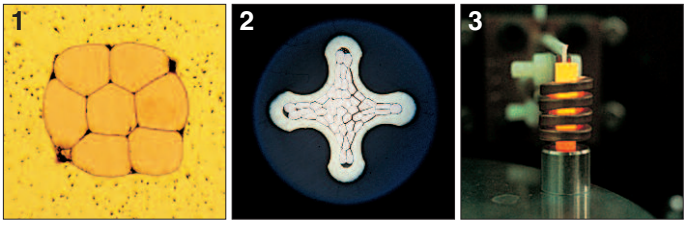

Crimp contacts

The crimp contacts can be with two forms: a standard crimp barrel for large conductors (see fig. 1) or with a reduced crimp barrel for smaller conductors (see fig. 2).

The range of cable dimensions that can be crimped into our contacts are indicated on the table on page 8.

Fig. 1

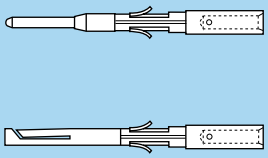

Fig. 2

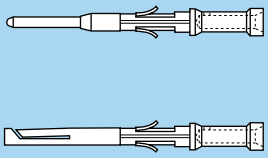

Print contacts

Print contacts are available in straight or elbow versions for certain connector types, mostly for straight and elbow socket models. Connection is made on flexible or rigid printed circuits by soldering.
Straight print contacts are gold-plated which guarantees optimum soldering, even after long-term storage. However for wave soldering, we recommend removal the gold-plating from the contact end on the printed circuit side before soldering according to the assembly procedures.
Print elbow contacts include a tinned lead free brass wire crimped into a crimp contact.

straight

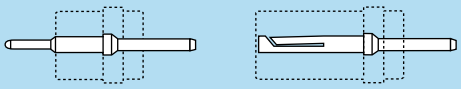

elbow

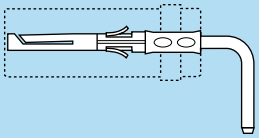

Test voltage

Test voltage (Ue) :
(measured according to the IEC 60512-2 test 4a standard)

It corresponds to 75% of the mean breakdown voltage.
Test voltage is applied at 500 V/s and the test duration is 1 minute.

This test has been carried out with a mated plug and socket, with power supply only on the plug end.

The operating voltage value definition is at the entire responsibility of the customer who defines this value according to the safety factors that they apply to their equipment and system.

Caution:
For a number of applications, safety requirements for electrical appliances are more severe with regard to operating voltage.
In such cases operating voltage is defined according to creepage distance and air clearance) between live parts.
Please consult us for the choice of a connector by indicating the safety standard to be met by the product.

Voltage values are given in the table on insulator types for each series.
They correspond with values measured at sea level. They are adapted to all applications up to an altitude of 2000 m.

In case a device is used at a higher altitude, air clearance between live parts has to be multiplied by the following coefficients.
It means also that test voltage has to be divided by this coefficient.

altitude (m)	coefficient
2000	1.00
3000	1.14
4000	1.29
5000	1.48

Rated current

(measured according to IEC 60512-3 test 5a)

The specified rated current can be applied simultaneously to all the contacts.
It corresponds with an average temperature rise of 40°C of the connector.

The current values are indicated in the table of insulator types in each series.
For use at higher temperatures acceptable rated current will be lower. It tends towards zero as the material is used at the maximum operating temperature accepted for the insulator.

In most case the current depend on the conductor dimension (see table on page 196) or on the printed circuit dimension.

Caution:
In general, connectors should not be unmated while live.

For connectors with PEEK insulator, maximum admissible current will follow the curve below depending on the operating temperature T.

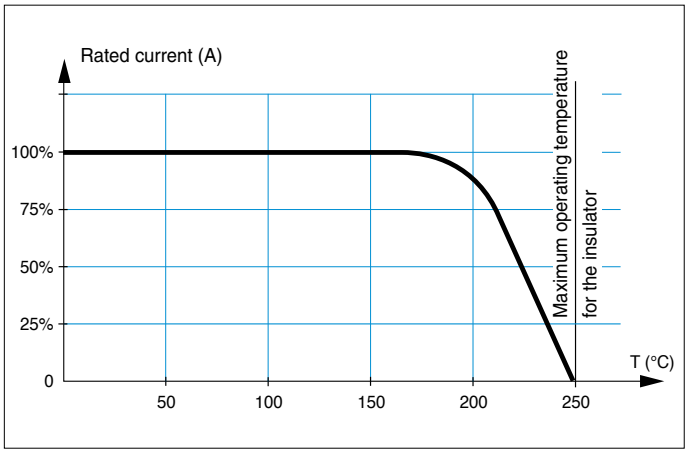

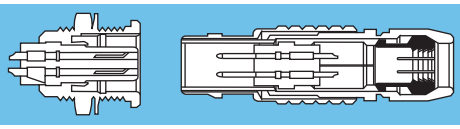

Cable fixing

Cables are fixed into LEMO connectors with cable collet systems. These collets with latches have a design which is very similar to those used for tool machines. This solution guarantees excellent cable retention and ensures perfectly symmetrical deformation of the cable.
The 00 multipole series is also available with hexagonal crimping (MIL-C-22520F).

Material and treatment

Component	Material (standard)	Surface treatment (µm)				
		Nickel[1]		Gold		
		Cu	Ni	Cu	Ni	Au
Center piece	Brass (UNS C 38500)	0.5	3	–	–	–
Collet	Brass (UNS C 38500)	0.5	3	–	–	–
Crimp ferrule	Copper (UNS C 18700)	0.5	3	0.5	3	0.5
Reducer	Brass (UNS C 38500)	0.5	3	–	–	–
Reducing cone	Brass (UNS C 38500)	0.5	3	–	–	–
Earthing cone	Brass (UNS C 38500)	0.5	3	–	–	–
Metal washer	Brass (UNS C 38500)	0.5	3	–	–	–
Gasket	Silicone MQ/MVQ	–				
	FPM (Viton®)[2]	–				

Notes:
1) standards for surface treatment are as follows:
– nickel-plated: SAE AMS QQ N 290.
2) available upon special request.

Cable clamping system

B series (D and M cable clamping)

See assembly instructions under www.lemo.com.

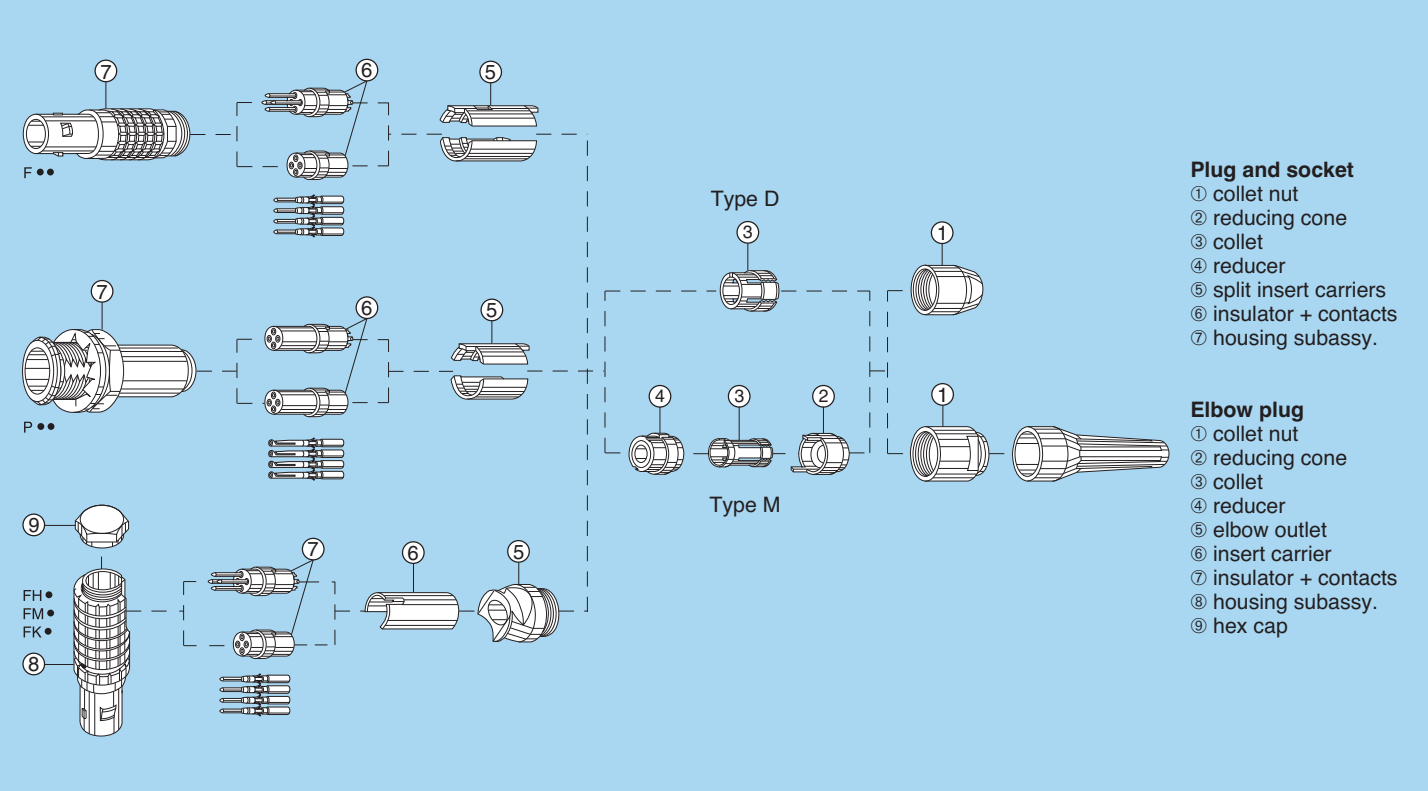

K series (C and K cable clamping)

See assembly instructions under www.lemo.com.

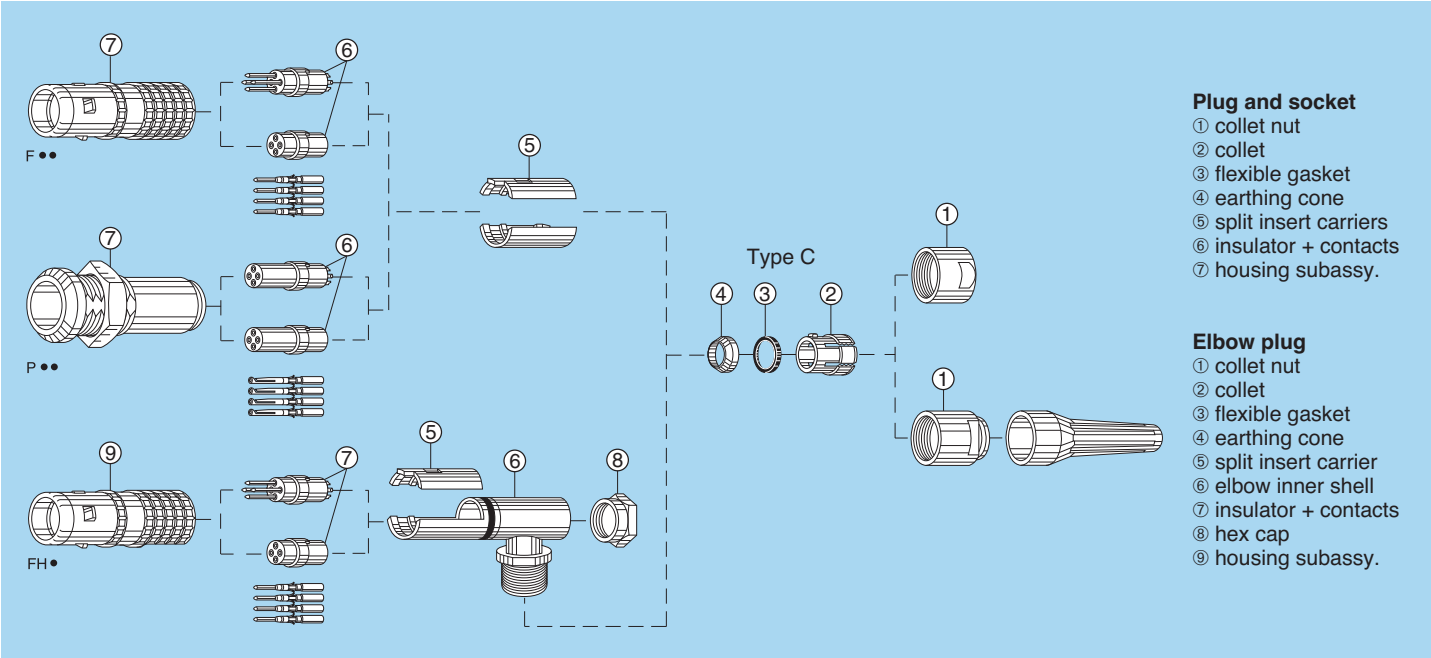

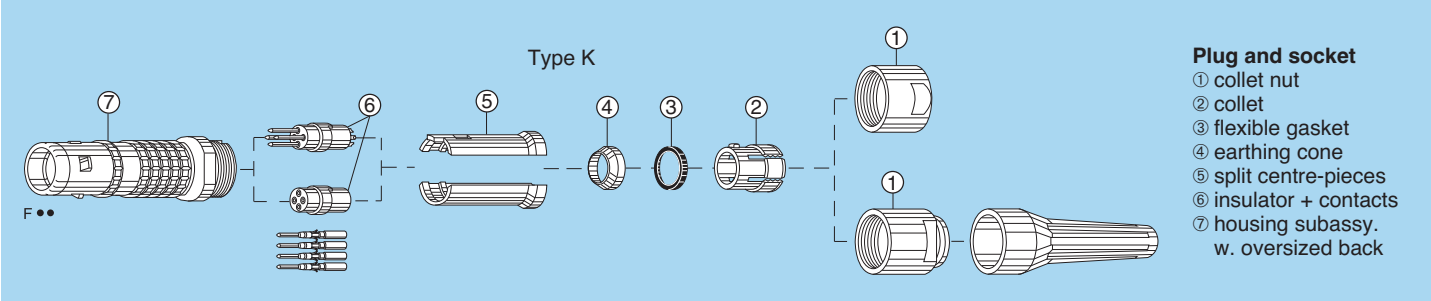

T series (C cable clamping)

See assembly instructions under www.lemo.com.

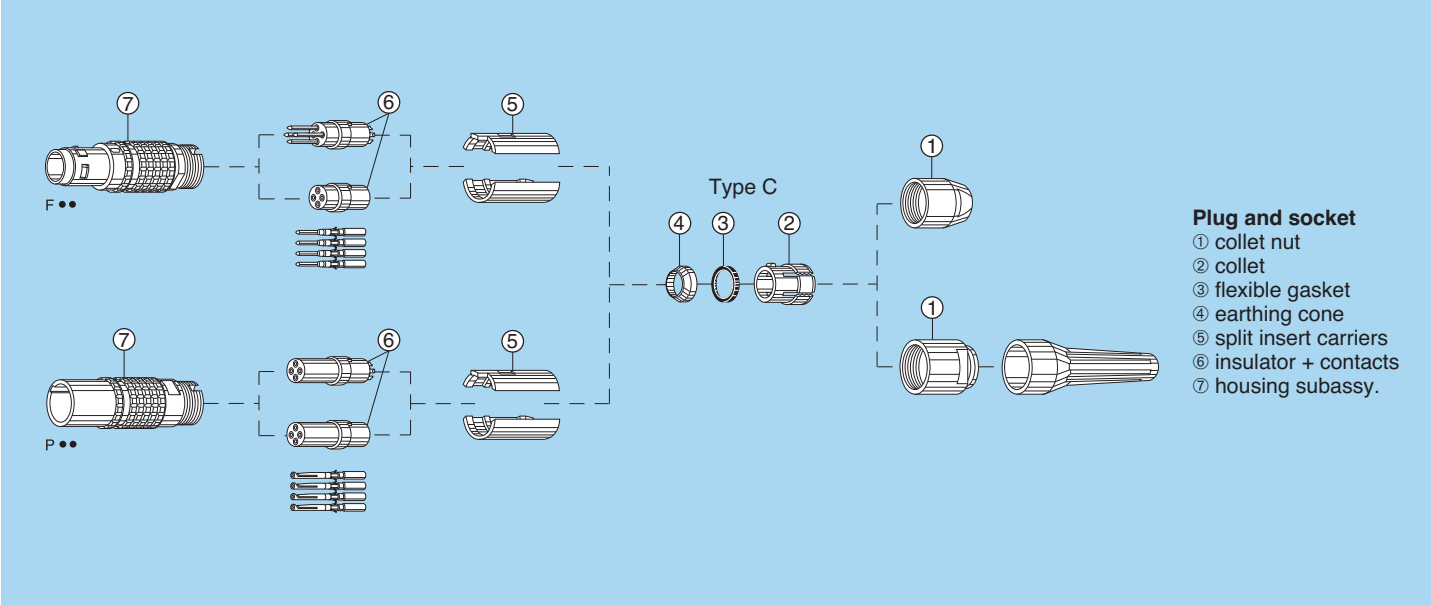

S series (C, L and K cable clamping)

See assembly instructions under www.lemo.com.

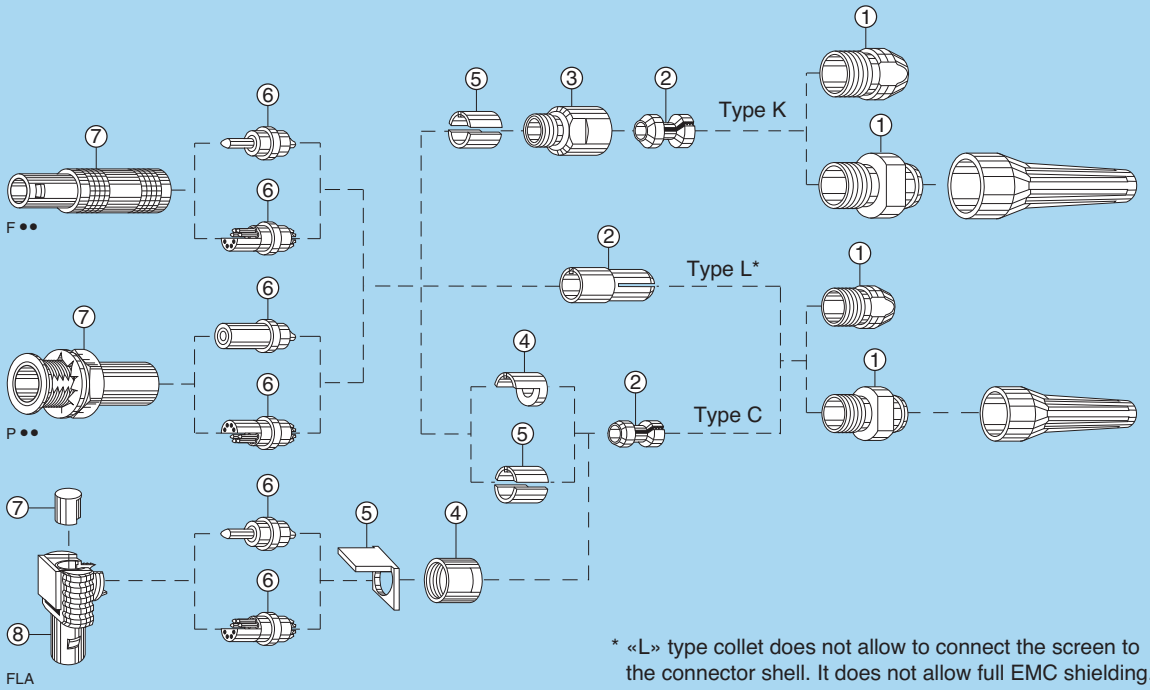

Plug and socket
① collet nut
② collet
③ oversize collet housing (type K)
④ earthing centre-piece (type C)
⑤ split centre-pieces (type K and C)
⑥ insulator + contacts
⑦ housing subassy.

Elbow plug
① collet nut
② collet
④ threaded sleeve
⑤ bracket
⑥ insulator + contacts
⑦ insulating sleeve
⑧ housing subassy.

* «L» type collet does not allow to connect the screen to the connector shell. It does not allow full EMC shielding.

E series (C and K cable clamping)

See assembly instructions under www.lemo.com.

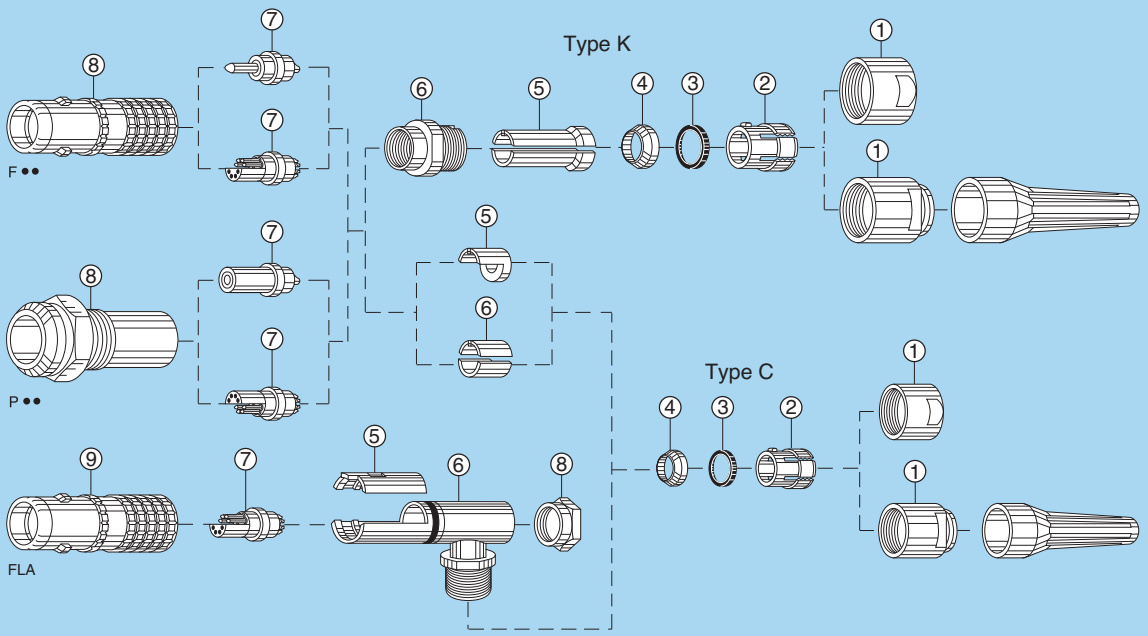

Plug and socket
① collet nut
② collet
③ flexible gasket
④ earthing cone
⑤ split centre-pieces (type K)
⑤ earthing centre-piece (type C)
⑥ oversize collet housing (type K)
⑥ earthing centre-piece (type C)
⑦ insulator + contacts
⑧ housing subassy.

Elbow plug
① collet nut
② collet
③ flexible gasket
④ earthing cone
⑤ split insert carrier
⑥ elbow inner shell
⑦ insulator + contacts
⑧ hex cap
⑨ housing subassy.

Maximum metal collet nut tightening torque

Standard series

	Series							
	00	0S	1S	2S	3S	4S	5S	6S
Torque (Nm)	0.25	0.5	1.5	2.5	3	8	10	12

Watertight series

	Series						
	0E	1E	2E	3E	4E	5E	6E
Torque (Nm)	0.7	0.8	2	3	5	8	12

Keyed series

	Series							
	00	0B	1B	XB	2B	3B	4B	5B
Torque (Nm)	0.25	0.5	1.5	2.0	2.5	4	7	10

Watertight keyed series

	Series										
	TT	0K	0T	1K	1T	2K	2T	3K	3T	4K	5K
Torque (Nm)	0.25	0.7	0.7	0.8	0.8	2	2	3	3	5	8

Maximum elbow plug hex cap tightening torque

Keyed series

	Series						
	00	0B	1B	2B	3B	4B	5B
Torque (Nm)	0.2	0.25	0.5	0.5	1.5	3	5

Watertight series

	Series					
	0E	1E	2E	3E	4E	5E
Torque (Nm)	0.8	1	1.2	1.5	3	5

Watertight keyed series

	Series					
	0K	1K	2K	3K	4K	5K
Torque (Nm)	0.8	1	1.2	1.5	3	5

1N = 0.102 kg

Maximum plastic collet nut tightening torque [1)]

	Series								
	00	0S	1S	2S	3S	1B	2B	3B	4B
Torque (Nm)	0.15	0.45	0.50	0.50	1.00	0.50	0.50	1.00	1.50

Note:
[1)] For applications subject to strong vibration, we recommend fixing the collet nut with epoxy resin. We recommend to tight to the maximum value. Optimal torque may depend on cable jacket design.

Technical tables

Table of American Wire Gauge

AWG	Construction		ø wire max		Wire section	
	Strand nb	AWG/ strand	(mm)	(in)	(mm^2)	(sq in)
0	259	24	11.277	0.444	52.90	0.0820
1	817	30	9.702	0.382	41.40	0.0641
2	259	26	8.89	0.35	33.20	0.0514
4	133	25	6.9596	0.274	21.5925	0.0335
6	133	27	5.5118	0.217	13.5885	0.0211
8	168	30	4.4450	0.175	8.5127	0.0132
8	133	29	4.3942	0.173	8.6053	0.0133
10	105	30	3.3020	0.13	5.3204	0.0082
10	37	26	2.9210	0.115	4.7397	0.0073
10	1	10	2.6162	0.103	5.2614	0.0082
12	37	28	2.3114	0.091	2.9765	0.0046
12	19	25	2.3622	0.093	3.0847	0.0048
12 [1)]	7	20	2.5400	0.10	3.6321	0.0056
12	1	12	2.0828	0.082	3.3081	0.0051
14	41	30	2.0574	0.081	2.0775	0.0032
14	19	27	1.8542	0.073	1.9413	0.0030
14 [1)]	7	22	2.0828	0.082	2.2704	0.0035
14	1	14	1.6510	0.065	2.0820	0.0032
16 [1)]	65	34	1.5748	0.062	1.3072	0.0020
16	26	30	1.5748	0.062	1.3174	0.0020
16	19	29	1.4986	0.059	1.2293	0.0019
16 [1)]	7	24	1.5494	0.061	1.4330	0.0022
16	1	16	1.3208	0.052	1.3076	0.0020
18 [1)]	65	36	1.2700	0.05	0.8234	0.0013
18 [1)]	42	34	1.2700	0.05	0.8447	0.0013
18	19	30	1.3208	0.052	0.9627	0.0015
18	16	30	1.2954	0.051	0.8107	0.0013
18	7	26	1.2700	0.05	0.8967	0.0014
18	1	18	1.0414	0.041	0.8229	0.0013

AWG	Construction		ø wire max		Wire section	
	Strand nb	AWG/ strand	(mm)	(in)	(mm^2)	(sq in)
20 [1)]	42	36	1.0160	0.04	0.5320	$8.2x10^{-4}$
20	19	32	1.0414	0.041	0.6162	0.0010
20	10	30	1.0160	0.04	0.5067	$7.9x10^{-4}$
20	7	28	0.9906	0.039	0.5631	$8.7x10^{-4}$
20	1	20	0.8382	0.033	0.5189	$8.0x10^{-4}$
22	19	34	0.8382	0.033	0.3821	$5.9x10^{-4}$
22	7	30	0.7874	0.031	0.3547	$5.5x10^{-4}$
22	1	22	0.6604	0.026	0.3243	$5.0x10^{-4}$
24 [1)]	42	40	0.6604	0.026	0.2045	$3.2x10^{-4}$
24	19	36	0.6858	0.027	0.2407	$3.7x10^{-4}$
24	7	32	0.6350	0.025	0.2270	$3.5x10^{-4}$
24	1	24	0.5588	0.022	0.2047	$3.2x10^{-4}$
26	19	38	0.5588	0.022	0.1540	$2.4x10^{-4}$
26	7	34	0.5080	0.02	0.1408	$2.2x10^{-4}$
26	1	26	0.4318	0.017	0.1281	$2.0x10^{-4}$
28 [1)]	19	40	0.4318	0.017	0.0925	$1.4x10^{-4}$
28	7	36	0.4064	0.016	0.0887	$1.4x10^{-4}$
28	1	28	0.3302	0.013	0.0804	$1.2x10^{-4}$
30	7	38	0.3302	0.013	0.0568	$8.8x10^{-5}$
30	1	30	0.2794	0.011	0.0507	$7.9x10^{-5}$
32	7	40	0.2794	0.011	0.0341	$5.3x10^{-5}$
32	1	32	0.2286	0.009	0.0324	$5.0x10^{-5}$
34	1	34	0.1693	0.007	0.0201	$3.1x10^{-5}$
36	1	36	0.127	0.005	0.0127	$2.0x10^{-5}$
38	1	38	0.1016	0.004	0.0081	$1.3x10^{-5}$
40	1	40	0.078	0.003	0.0049	$7.5x10^{-6}$

Note: [1)] not included in the standard

Table of wire gauges according to IEC-60228 standard

Conductor no x Ø (mm)	Max Ø (mm)	Max Ø (in)	Section (mm^2)	Section (sq in)
196x0.40	7.50	0.295	25.00	0.0387
7x2.14	6.10	0.240	25.00	0.0387
125x0.40	6.00	0.236	16.00	0.0248
7x1.72	4.90	0.192	16.00	0.0248
1x4.50	4.50	0.177	16.00	0.0248
80x0.40	4.70	0.155	10.00	0.0155
7x1.38	3.95	0.155	10.00	0.0155
1x3.60	3.60	0.141	10.00	0.0155
84x0.30	3.70	0.145	6.00	0.0093
7x1.50	3.15	0.124	6.00	0.0093
1x2.76	2.76	0.108	6.00	0.0093
56x0.30	2.80	0.110	4.00	0.0062
7x0.86	2.58	0.098	4.00	0.0062
1x2.25	2.25	0.082	4.00	0.0062
50x0.25	2.15	0.084	2.50	0.0038
7x0.68	2.04	0.080	2.50	0.0038
1x1.78	1.78	0.070	2.50	0.0038
30x0.25	1.60	0.062	1.50	0.0023
7x0.52	1.56	0.061	1.50	0.0023

Conductor no x Ø (mm)	Max Ø (mm)	Max Ø (in)	Section (mm^2)	Section (sq in)
1x1.40	1.40	0.055	1.50	0.0023
32x0.20	1.35	0.053	1.00	0.0015
7x0.43	1.29	0.050	1.00	0.0015
1x1.15	1.15	0.045	1.00	0.0015
42x0.15	1.20	0.047	0.75	0.0011
28x0.20	1.15	0.045	0.75	0.0011
1x1.00	1.00	0.039	0.75	0.0011
28x0.15	0.95	0.037	0.50	$7.7x10^{-4}$
16x0.20	0.90	0.035	0.50	$7.7x10^{-4}$
1x0.80	0.80	0.031	0.50	$7.7x10^{-4}$
7x0.25	0.75	0.029	0.34	$5.2x10^{-4}$
1x0.60	0.60	0.023	0.28	$4.3x10^{-4}$
14x0.15	0.75	0.029	0.25	$3.8x10^{-4}$
7x0.20	0.65	0.023	0.22	$3.4x10^{-4}$
18x0.10	0.50	0.019	0.14	$2.1x10^{-4}$
14x0.10	0.40	0.015	0.11	$1.7x10^{-4}$
21x0.07	0.40	0.015	0.09	$1.3x10^{-4}$
14x0.10	0.40	0.015	0.09	$1.3x10^{-4}$

Maximum current rating for conductor

Maximum current on insulated conductors up to an ambiant temperature of 30° C (from VDE 0100, parts 430 and 532 as well as other VDE regulations).

Nominal section mm^2	Group 2 Intens. max. A	Group 3 Intens. max. A
0.08	1.0	1.5
0.14	2.0	3.0
0.25	4.0	5.0
0.34	6.0	8.0
0.50	9.0	12.0
0.75	12.0	15.0
1.00	15.0	19.0
1.50	18.0	24.0
2.50	26.0	32.0

Group 2 Multi-conductor, e. g. solid cable under sheath, shielded cable, lead-sheath cables, …
Group 3 Single conductor and single conductor cable laid on open air in a way to leave at least a space between them equal to their diameter

Some formulae

Resistance R of a conductor: $R = \rho \bullet \frac{l}{A}$ [Ω]

Where: ρ = conductor resistivity
l = conductor length
A = conductor cross-section

Impedance of coaxial line: $Z = \frac{138}{\sqrt{\varepsilon_r}} \bullet \log \frac{D}{d}$ [Ω]

ε_r = dielectric constant
D = dielectric outer diameter
d = center conductor outer diameter

Signal attenuation: Attenuation $= 20 \bullet \log \frac{U_1}{U_2}$ [dB]

U_1 = input signal voltage
U_2 = output signal voltage

Conversion of some units:

millimeters into inches:	1 mm	= 0.0394 in
inches into millimeters:	1 in	= 25.4 mm
centimeters into feet:	1 cm	= 0.0328 ft
feet (12 in) into centimeters:	1 ft	= 30.48 cm
square centimeters into square inches:	1 cm^2	= 0.155 sq in
square inches into square centimeters:	1 sq in	= 6.4516 cm^2
bar into pounds per square inch:	1 bar	= 14.51 psi
bar into Pascal:	1 bar	= 10^5 Pa
°C into °F:	°F	= °C•1.8 + 32
newtonmeter (Nm) into inch pound (in•lb)	1 Nm	= 8.85 in•lb
mbar•l•s^{-1} into Torr•l•s^{-1}	1 mbar•l•s^{-1}	= 1.33 Torr•l•s^{-1}

Product safety notice

PLEASE READ AND FOLLOW ALL INSTUCTIONS CAREFULLY AND CONSULT ALL RELEVENT NATIONAL AND INTERNATIONAL SAFETY REGULATIONS FOR YOUR APPLICATION.
IMPROPER HANDLING, CABLE ASSEMBLY, OR WRONG USE OF CONNECTORS CAN RESULT IN HAZARDOUS SITUATIONS.

1. **SHOCK AND FIRE HAZARD**
   Incorrect wiring, the use of damaged components, presence of foreign objects (such as metal debris), and / or residue (such as cleaning fluids), can result in short circuits, overheating, and / or risk of electric shock.
   Mated components should never be disconnected while live as this may result in an exposed electric arc and local overheating, resulting in possible damage to components.

2. **HANDLING**
   Connectors and their components should be visually inspected for damage prior to installation and assembly. Suspect components should be rejected or returned to the factory for verification.
   Connector assembly and installation should only be carried out by properly trained personnel. Proper tools must be used during installation and / or assembly in order to obtain safe and reliable performance.

3. **USE**
   Connectors with exposed contacts should never be live (or on the current supply side of a circuit). Under general conditions voltages above 30 VAC and 42 VDC are considered hazardous and proper measures should be taken to eliminate all risk of transmission of such voltages to any exposed metal part of the connector.

4. **TEST AND OPERATING VOLTAGES**
   The maximum admissible operating voltage depends upon the national or international standards in force for the application in question. Air and creepage distances impact the operating voltage; reference values are indicated in the catalog however these may be influenced by PC board design and / or wiring harnesses.
   The test voltage indicated in the catalog is 75% of the mean breakdown voltage; the test is applied at 500 V/s and the test duration is 1 minute.

5. **CE MARKING CE**
   CE marking CE means that the appliance or equipment bearing it complies with the protection requirements of one or several European safety directives.
   CE marking CE applies to complete products or equipment, **but not to electromechanical components, such as connectors**.

6. **PRODUCT IMPROVEMENTS**
   The LEMO Group reserves the right to modify and improve to our products or specifications without providing prior notification.

7. ⚠ **WARNING (Prop 65 State of California)**
   Proposition 65 requires businesses to provide warnings to Californians about significant exposures to chemicals that cause cancer, birth defects or other reproductive harm. LEMO products are exempt from proposition 65 warnings because they are manufactured, marketed, and sold solely for commercial and industrial use. For further information, please visit https://www.lemo.com/quality/LEMO-Prop-65-compliance-declaration.pdf.

Disclaimers

LEMO works constantly to improve the quality of its products; the information and illustrations figuring in this document may therefore vary and are not binding. In any case, LEMO makes no specific warranty of merchantability, fitness for a particular purpose, third party components as such or included in assembly, non-infringement, title, accuracy, completeness, or security. The user is fully responsible for his products and applications using LEMO component.

In no event shall LEMO, its affiliates, officers, agents or employees be liable for any incidental, indirect, special or consequential damages in connection with the products or services provided by LEMO, including (without limitation) loss of profits or revenues, interruption of business, loss of use of the products or any associated equipment, materials, components or products, damages to associated equipment or in combination with other components, materials.

Reproduction of significant portions of LEMO information in LEMO data books or data sheets is permissible only if reproduction is without alteration and is accompanied by all associated warranties, conditions, limitations, and notices. LEMO is not responsible or liable for such altered documentation. Information of third parties may be subject to additional restrictions.

Notes

LEMO complete product range

	B	S	K	T	E	F	00	01	0A	3T	4A	4M	3K.93C	1D	Y	05	5G	2G 2C	L	H	M	R	N	03	V	W	T7	P	SP	D	K/S	01	DIN
Unipole		●			●																												
Multipole	●	●	●	●	●																												
Coaxial 50 Ω																																	
Coaxial 75 Ω																																	
Multi Coaxial																																	
Hybrid Coax + LV																																	
Triaxial 50 Ω																																	
Triaxial 75 Ω																																	
Hybrid Triax + LV																																	
Quadrax																																	
High Voltage																																	
Multi High Voltage																																	
Hybrid HV + LV																																	
Fibre Optic																																	
Multi Fibre Optic																																	
Hybrid FO + LV																																	
Thermocouple																																	
Fluidic																																	
Multi Fluidic																																	
Hybrid Fluidic + LV																																	

Most frequently used in darker colour

● included in this catalogue

B Series Keyed

S Series

K Series Keyed

T Series

E Series

F Series Keyed

00 Series

01 Series

0A Series

3T Series

4A Series

4M Series Keyed

3K.93C Series Keyed

1D Series

Y Series

05 Series

5G Series Keyed

2G Series Keyed

2C Series

L Series Keyed

H Series

M Series Keyed

R Series Keyed

N Series Keyed

03 Series Keyed

V Series

W Series Keyed

Cable assembly

REDEL T7 Series

REDEL P Series Keyed

REDEL SP Series Keyed

REDEL D Series

01 Series Keyed

VAA Series

TAA Series

No reproduction or use without express permission of editorial or pictorial content, in any manner.
LEMO SA reserves the right to modify and improve specifications, at all times, without any notification.

LEMO HEADQUARTERS

SWITZERLAND
LEMO SA
Chemin des Champs-Courbes 28 - P.O. Box 194 - CH-1024 Ecublens
Tel. +41 21 695 16 00 - e-mail: info@lemo.com

LEMO SUBSIDIARIES

AUSTRIA
LEMO Elektronik GesmbH
Lemböckgasse 49/E6-3
1230 Wien
Tel: +43 1 914 23 20 0
Fax:+43 1 914 23 20 11
salesAT@lemo.com

BRAZIL
LEMO Latin America Ltda
Av. Dr. Adhemar de Barros,
566 – Sala 1407, Vila Adyana
CEP: 12245-011
São José dos Campos - SP - Brazil
Tel: +55 11 94242 4293
info-la@lemo.com

CANADA
LEMO Canada Inc
44 East Beaver Creek Road, unit 20
Richmond Hill, Ontario L4B 1G8
Tel: +1 905 889 56 78
Fax: +1 905 889 49 70
info-canada@lemo.com

CHINA / HONG KONG
LEMO Electronics (Shanghai) Co., Ltd
First Floor, Block E,
18 Jindian Road, Pudong
Shanghai, China, 201206
Tel: +86 21 5899 7721
Fax: +86 21 5899 7727
cn.sales@lemo.com

DENMARK
LEMO Denmark A/S
Mandal Allé 16A
5500 Middelfart
Tel: +45 45 20 44 00
Fax: +45 45 20 44 01
info-dk@lemo.com

FRANCE
LEMO France Sàrl
24/28 Avenue Graham Bell
Bâtiment Balthus 4
Bussy Saint Georges
77607 Marne la Vallée Cedex 3
Tel: +33 1 60 94 60 94
Fax: +33 1 60 94 60 90
info-fr@lemo.com

GERMANY
LEMO Elektronik GmbH
Hanns-Schwindt-Str. 6
81829 München
Tel: +49 89 42 77 03
Fax: +49 89 420 21 92
info@lemo.de

HUNGARY
REDEL Elektronika Kft
Nagysándor József u. 6-12
1201 Budapest
Tel: +36 1 421 47 10
Fax: +36 1 421 47 57
info-hu@lemo.com

ITALY
LEMO Italia srl
Viale Lunigiana 25
20125 Milano
Tel: +39 02 66 71 10 46
Fax: +39 02 37 90 80 46
sales.it@lemo.com

JAPAN
LEMO Japan Ltd
2-7-22, Mita,
Minato-ku, Tokyo, 108-0073
Tel: +81 3 54 46 55 10
Fax: +81 3 54 46 55 11
info-jp@lemo.com

NETHERLANDS / BELGIUM
LEMO Connectors Nederland B.V.
Jacques Meuwissenweg 6
2031 AD Haarlem
Tel. +31 23 206 07 01
info-nl@lemo.com

NORWAY / ICELAND
LEMO Norway A/S
Soerumsandvegen 69,
1920 Soerumsand
Tel: +47 22 91 70 40
Fax: +47 22 91 70 41
info-no@lemo.com

SINGAPORE
LEMO Asia Pte Ltd
4 Leng Kee Road,
#06-09 SiS Building
Singapore 159088
Tel: +65 6476 0672
Fax: +65 6474 0672
sg.sales@lemo.com

SPAIN / PORTUGAL
IBERLEMO SAU
Brasil, 45, 08402 Granollers
Barcelona
Tel: +34 93 860 44 20
Fax: +34 93 879 10 77
info-es@lemo.com

SWEDEN / FINLAND
LEMO Nordic AB
Gunnebogatan 30
163 53 Spånga
Tel: +46 8 635 60 60
Fax: +46 8 635 60 61
info-se@lemo.com

SWITZERLAND
LEMO Verkauf AG
Grundstrasse 22 B,
6343 Rotkreuz
Tel: +41 41 790 49 40
ch.sales@lemo.com

TAIWAN
TAOYUAN TAIWAN
Tel: +886 967 132 824
speng@lemo.com

UNITED ARAB EMIRATES
LEMO Middle East Connectors LLC
Concorde Tower 11th Floor,
Office 1102, Dubai Media City,
P.O. Box 449849
Dubai, United Arab Emirates
Tel: +971 4 568 1904
info-me@lemo.com

UNITED KINGDOM
LEMO UK Ltd
12-20 North Street, Worthing,
West Sussex, BN11 1DU
Tel: +44 1903 23 45 43
lemouk@lemo.com

USA
LEMO USA Inc
P.O. Box 2408
Rohnert Park, CA 94927-2408
Tel: +1 707 578 88 11
+1 800 444 53 66
Fax: +1 707 578 08 69
info-US@lemo.com

CAT.UM.LEN.P1217, © LEMO / Data subject to change, printed in Switzerland, pdf updated July 2023

LEMO DISTRIBUTORS

ARGENTINA, AUSTRALIA, BRAZIL, CHILE, COLOMBIA, CZECH REPUBLIC, GREECE, INDIA, ISRAEL, NEW ZEALAND, PERU, POLAND, SOUTH AFRICA, SOUTH KOREA, TURKEY, UKRAINE

www.lemo.com