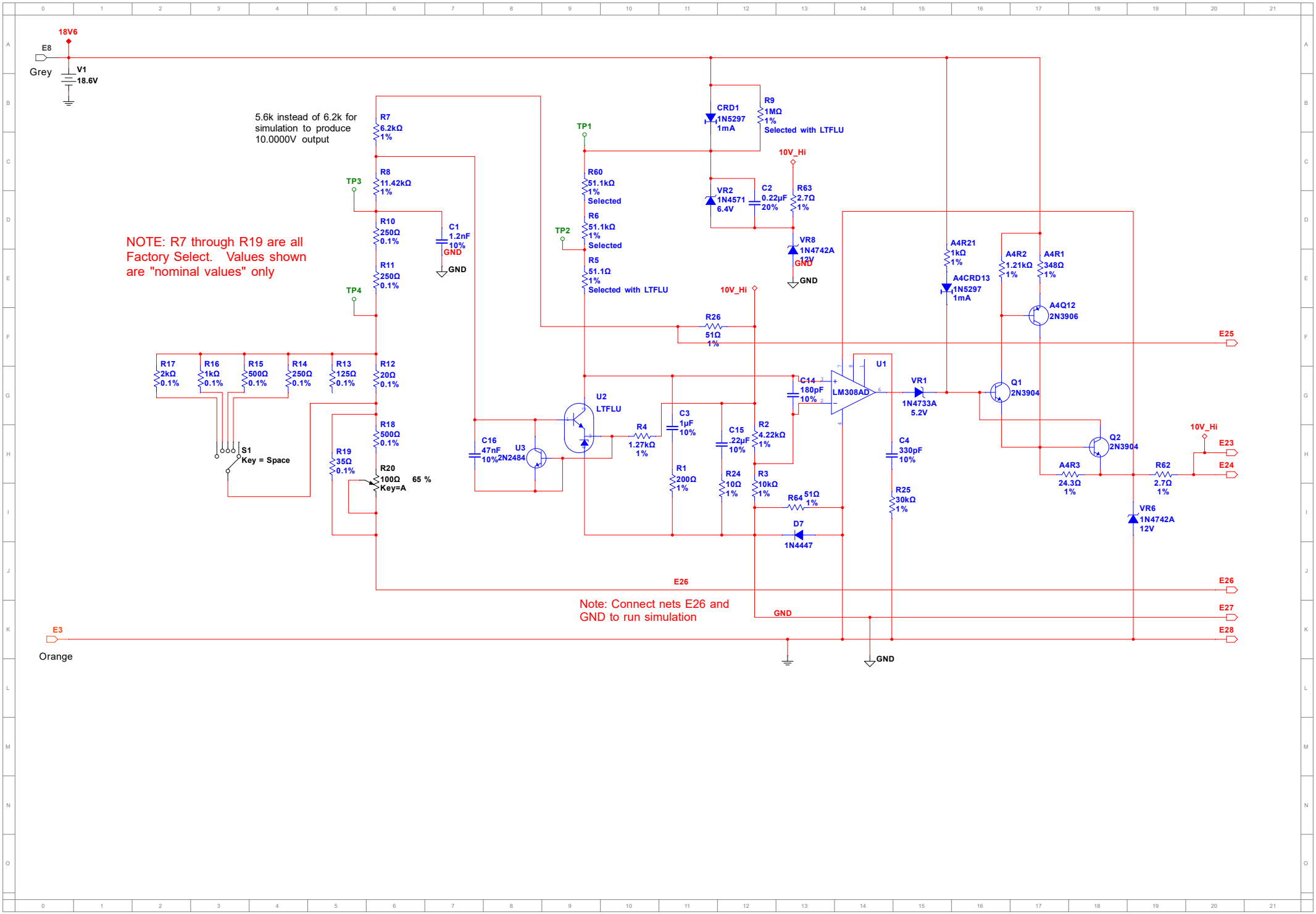
18V6
E8
Grey
V1
18.6V
5.6k instead of 6.2k for simulation to produce 10.0000V output
R7
6.2kΩ
1%
R8
11.42kΩ
1%
TP3
R10
250Ω
0.1%
C1
1.2nF
10%
GND
R11
250Ω
0.1%
TP4
NOTE: R7 through R19 are all Factory Select. Values shown are "nominal values" only
R17
2kΩ
0.1%
R16
1kΩ
0.1%
R15
500Ω
0.1%
R14
250Ω
0.1%
R13
125Ω
0.1%
R12
20Ω
0.1%
S1
Key = Space
R18
500Ω
0.1%
R19
35Ω
0.1%
R20
100Ω
Key=A
65 %
C16
47nF
10%
U3
2N2484
TP1
R60
51.1kΩ
1%
Selected
TP2
R6
51.1kΩ
1%
Selected
R5
51.1Ω
1%
Selected with LTFLU
U2
LTFLU
R4
1.27kΩ
1%
C3
1µF
10%
R1
200Ω
1%
C15
.22µF
10%
R24
10Ω
1%
R2
4.22kΩ
1%
R3
10kΩ
1%
R64
51Ω
1%
D7
1N4447
CRD1
1N5297
1mA
R9
1MΩ
1%
Selected with LTFLU
10V_Hi
VR2
1N4571
6.4V
C2
0.22µF
20%
R63
2.7Ω
1%
VR8
1N4742A
12V
GND
R26
51Ω
1%
C14
180pF
10%
U1
LM308AD
VR1
1N4733A
5.2V
C4
330pF
10%
R25
30kΩ
1%
A4R21
1kΩ
1%
A4CRD13
1N5297
1mA
A4R2
1.21kΩ
1%
A4R1
348Ω
1%
A4Q12
2N3906
Q1
2N3904
Q2
2N3904
A4R3
24.3Ω
1%
R62
2.7Ω
1%
VR6
1N4742A
12V
E25
E23
E24
E26
E27
E28
E3
Orange
Note: Connect nets E26 and GND to run simulation